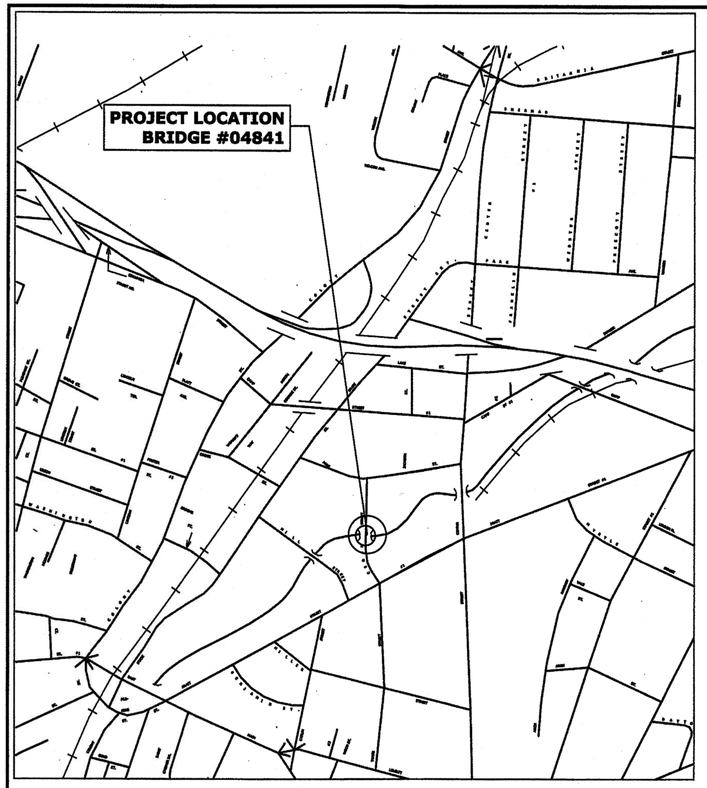

LOCATION MAP

SCALE: 1" = 500'

CITY OF MERIDEN, CONNECTICUT

PLAN FOR REPLACEMENT OF CEDAR STREET BRIDGE OVER HARBOR BROOK

LOTCIP PROJECT NUMBER L079-0003
BRIDGE #04841
ROADWAY RECONSTRUCTION
STATION 0+90.28 TO STATION 5+32.05
TO BE MAINTAINED BY THE CITY OF MERIDEN

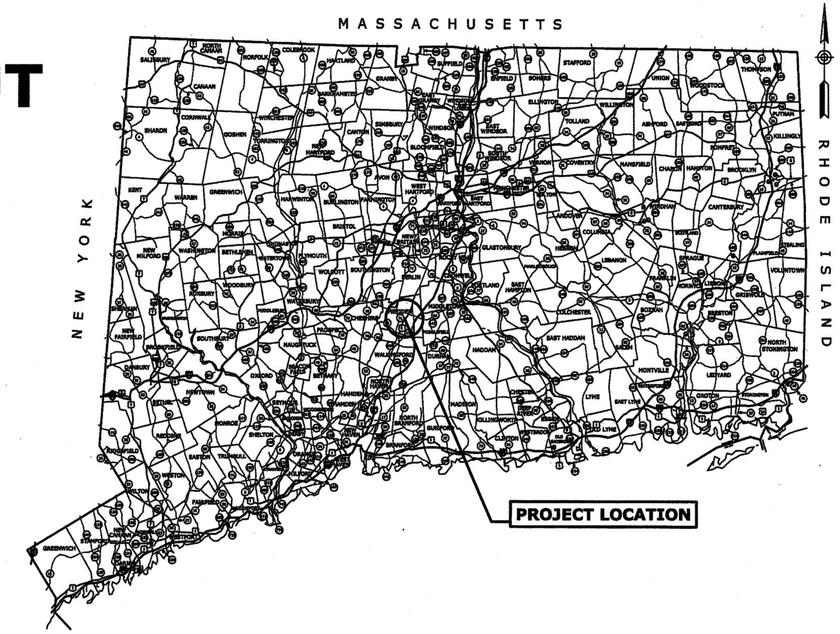

ROAD CLASSIFICATION: URBAN LOCAL
DESIGN SPEED: 25 MPH
ADT (ConnDOT): 776 V.P.D.
ROADSIDE CLEAR ZONE: 12'

TECHNICAL SPECIFICATIONS: STATE OF CONNECTICUT DEPARTMENT OF TRANSPORTATION STANDARD SPECIFICATIONS FOR ROADS, BRIDGES, FACILITIES AND INCIDENTAL CONSTRUCTION (FORM 818 DATED 2020) AND LATEST SUPPLEMENTAL SPECIFICATIONS DATED JANUARY 2021 THERETO, AS WELL AS ANY SPECIAL PROVISIONS BY THE CITY OF MERIDEN.

DESIGN STANDARDS: AASHTO POLICY ON THE GEOMETRIC DESIGN OF HIGHWAYS AND STREETS, DATED 2004 AND THE CONNECTICUT DEPARTMENT OF TRANSPORTATION HIGHWAY DESIGN MANUAL DATED 2003.

SURVEY: ALL COORDINATES ON THE PROJECT ARE BASED ON N.A.D 1927. ALL ELEVATIONS ARE BASED ON N.A.V.D 1929.

CONNECTICUT DEPARTMENT OF TRANSPORTATION OR CITY OF MERIDEN BIDDING AND OTHER INFORMATION AND DOCUMENTS WHICH ARE OBTAINED THROUGH THE INTERNET, WORLD WIDE WEB SITES OR OTHER SOURCES ARE NOT TO BE CONSTRUED TO BE OFFICIAL INFORMATION FOR THE PURPOSES OF BIDDING OR CONDUCTING OTHER BUSINESS WITH THE CITY OF MERIDEN.

IT IS THE RESPONSIBILITY OF EACH BIDDER AND ALL OTHER INTERESTED PARTIES TO OBTAIN ALL BIDDING RELATED INFORMATION AND DOCUMENTS FROM OFFICIAL SOURCES WITHIN THE CITY OF MERIDEN.

PERSONS AND/OR ENTITIES WHICH REPRODUCE AND/OR MAKE SUCH INFORMATION AVAILABLE BY ANY MEANS ARE NOT AUTHORIZED BY THE CITY OF MERIDEN TO DO SO AND MAY BE LIABLE FOR CLAIMS RESULTING FROM THE DISSEMINATION OF UNOFFICIAL, INCOMPLETE AND/OR INACCURATE INFORMATION.

LIST OF DRAWINGS

SHEET NO.	TITLE
1	TITLE SHEET
2	DETAILED ESTIMATE SHEET
3	DETOUR PLAN
4	EXISTING CONDITIONS PLAN
5	ROADWAY PLAN
6	UTILITY PLAN
7	ROADWAY PROFILE
8	ROADWAY DETAILS
9-10	ROADWAY SECTIONS
11-12	SANITARY SEWER DETAILS
13-14	WATER DETAILS
15	STAGING PLAN
16	HANDLING WATER DETAILS
17	EROSION AND SEDIMENTATION CONTROL DETAILS
18	STRUCTURE, ELEVATION AND SECTION PLAN
19	STRUCTURAL GENERAL NOTES
20-21	BORING LOGS
22	STRUCTURE LAYOUT PLAN
23	ABUTMENT #1 PLAN & ELEVATION
24	ABUTMENT #2 PLAN & ELEVATION
25	WINGWALL PLANS AND ELEVATIONS
26	ABUTMENT, WINGWALL, CHECKWALL, BACKWALL DETAILS
27	FRAMING PLAN
28	PRESTRESSED DECK UNITS
29	DECK SLAB PLAN
30	MISCELLANEOUS STRUCTURE DETAILS
31	METAL BEAM RAIL ATTACHMENT DETAILS
32	METAL BRIDGE RAIL (HANDRAIL)
UTL-1	UTILITY RELOCATION PLAN (EVERSURCE -GAS) (FOR INFORMATION ONLY)
ENV.1	ENVIRONMENTAL PLAN (FOR INFORMATION ONLY)

STANDARD DRAWINGS

DWG. NO.	TITLE
HW-586-01	TYPE "C", "C-L" & DROP INLET CATCH BASIN
HW-586-07	TYPE "C", "C-L" CATCH BASIN TOPS AND CURBS
HW-586-08	CATCH BASIN FRAMES AND GRATES
HW-813-02	STONE CURBING
HW-815-01	BITUMINOUS CONCRETE CURBING
HW-822-01	TEMPORARY PRECAST CONCRETE BARRIER CURB
HW-910-07	R-B 350 BRIDGE ATTACHMENT VERTICAL SHAPE PARAPET
HW-911-01	R-B END ANCHORAGE TYPE I AND II
HW-913-01A	CHAIN LINK FENCE
HW-913-01B	CHAIN LINK FENCE HARDWARE
HW-921-01	DRIVEWAY RAMPS AND SIDEWALKS
TR-1205_01	DELINEATION, DELINEATORS AND OBJECT MARKER DETAILS
TR-1208_01	SIGN PLACEMENT AND RETROREFLECTIVE STRIP DETAILS
TR-1208-02	METAL SIGN POSTS AND SIGN MOUNTING DETAILS
TR-1210_04	PAVEMENT MARKING LINES AND SYMBOLS
TR-1210_08	PAVEMENT MARKINGS FOR NON FREEWAYS
TR-1220-01	SIGNS FOR CONSTRUCTION AND PERMIT OPERATIONS
TR-1220-02	CONSTRUCTION SIGN SUPPORTS AND CHANNELIZING DEVICES

STATE OF CONNECTICUT
KEEGAN O. ELLER
PSEN 0081802
LICENSED
PROFESSIONAL ENGINEER

DESIGNED BY WMC CONSULTING ENGINEERS

SUBMITTED BY Keegan O. Eller DATE 9/8/2021

CITY MANAGER - CITY OF MERIDEN

DATE 2/16/22

TIMOTHY COON

DATE: 09/07/2021

THE INFORMATION INCLUDING ESTIMATED QUANTITIES OF WORK, SHOWN ON THESE SHEETS IS BASED ON LIMITED INVESTIGATIONS BY THE CITY OF MERIDEN AND IS NO WAY WARRANTED TO INDICATE THE TRUE CONDITIONS OR ACTUAL QUANTITIES OR DISTRIBUTION OF QUANTITIES OF WORK WHICH WILL BE REQUIRED.

WHEREVER THE PAY UNITS IN THE LEFT COLUMN APPEAR ON THE DETAILED ESTIMATE SHEET, THEY SHALL BE CONSTRUED TO MEAN THE EQUIVALENT PAY UNITS IN THE RIGHT COLUMN ON THE PROPOSAL FORM.

c.y.	C.Y.
l.f.	L.F.
ton	TON
s.y.	S.Y.
lb.	LB.
s.f.	S.F.
gal.	GAL.
c.f.	C.F.
c.i.	C.I.

FOR THE CONSTRUCTION OF REPLACEMENT OF THE CEDAR STREET BRIDGE NO. 04841, CEDAR STREET BRIDGE OVER HARBOR BROOK IN THE CITY OF MERIDEN, CONNECTICUT

ROADWAY ITEMS

ITEM NUMBER	0201001	0020763 A	0101000 A	0101117 A	0101128 A	0201199 A	0202000	0202315 A	0202318 A	0204210 A	0202529	0209001	0212000	0219001	0286001.10	0406170	0406171	0406236	0586001.10	0686000.18	0686950.10	0703012	0755014	0813021	0815001	0822001	0910173	0911924	0913021	0921001	0922501	0924006	0944000	0950005	0969060 A	0970007	0971001 A	0975004	0976002	0977001	0979003	0980020	1208931 A	1210101	1210102	1220027
ITEM DESCRIPTION	CLEARING AND GRUBBING	DISPOSAL OF SEDIMENTS	ENVIRONMENTAL HEALTH AND SAFETY	CONTROLLED MATERIALS HANDLING	SECURING, CONSTRUCTION AND DISMANTLING OF A MOBILE STOCKPILE AND TREATMENT AREA	REMOVE AND RESET FENCE	EARTH EXCAVATION	DISPOSAL OF CONTROLLED MATERIALS	MANAGEMENT OF REUSABLE CONTROLLED MATERIAL	HANDLING CONTAMINATED GROUNDWATER	CUT BITUMINOUS CONCRETE PAVEMENT	FORMATION OF SUBGRADE	SUBBASE	SEDIMENTATION CONTROL SYSTEM	ROCK IN DRAINAGE TRENCH EXCAVATION 0'-10' DEEP	HMA S1	HMA S0.5	MATERIAL FOR TACK COAT	TYPE 'C' CATCH BASIN - 0'-10' DEEP	18" R.C. PIPE - 0'-10' DEEP	REMOVE EXISTING PIPE - 0' - 10' DEEP	MODIFIED RIPRAP	GEOTEXTILE (SEPARATION HIGH SURVIVABILITY)	6" GRANITE STONE CURBING	BITUMINOUS CONCRETE LIP CURBING	TEMPORARY PRECAST CONCRETE BARRIER CURB	R-B 350 BRIDGE ATTACHMENT - VERTICAL SHAPED PARAPET	R-B END ANCHORAGE - TYPE II	6' CHAIN LINK FENCE	CONCRETE SIDEWALK	BITUMINOUS CONCRETE DRIVEWAY	CONCRETE DRIVEWAY RAMP	FURNISHING AND PLACING TOPSOIL	TURF ESTABLISHMENT	CONSTRUCTION FIELD OFFICE (SMALL)	TRAFFICPERSON (UNIFORMED FLAGGER)	MAINTENANCE AND PROTECTION OF TRAFFIC	MOBILIZATION AND PROJECT CLOSEOUT	BARRICADE WARNING LIGHT-HIGH INTENSITY	TRAFFIC CONE	CONSTRUCTION BARRICADE TYPE III	CONSTRUCTION SURVEYING	SIGN FACE - SHEET ALUMINUM (TYPE IX RETROREFLECTIVE SHEETING)	4" WHITE EPOXY RESIN PAVEMENT MARKING	4" YELLOW EPOXY RESIN PAVEMENT MARKING	CONSTRUCTION SIGNS
UNIT	L.S.	TON	L.S.	C.Y.	L.S.	L.F.	C.Y.	TON	C.Y.	L.S.	L.F.	S.Y.	C.Y.	L.F.	C.Y.	TON	TON	GAL.	EA.	L.F.	L.F.	C.Y.	S.Y.	L.F.	L.F.	L.F.	EA.	EA.	L.F.	S.F.	S.Y.	S.F.	S.Y.	S.Y.	MO.	HR.	L.S.	L.S.	DAY	EA.	EA.	L.S.	S.F.	L.F.	L.F.	S.F.
TOTAL	L.S.	50	1	1400	1	410	1215	2100	1300	1	80	1635	455	785	5	585	405	420	2	132	117	25	70	760	55	120	4	4	155	3840	60	250	950	950	9	120	L.S.	L.S.	1620	25	4	L.S.	5	930	930	325
TOTAL	L.S.	50	L.S.	1400	L.S.	410	1215	2100	1300	L.S.	80	1635	455	785	5	585	405	420	2	132	117	25	70	760	55	120	4	4	155	3840	60	250	950	950	9	120	L.S.	L.S.	1620	25	4	L.S.	5	930	930	325

STRUCTURE ITEMS

ITEM NUMBER	0202200	0202216 A	0203202	0203304	0204001	0204151 A	0213100	0216000	0406171	0406173	0406236	0503890 A	0514227	0520036 A	0521021 A	0601062	0601064	0601088 A	0601118	0601121	0601122	0601123	0601504	0601640	0602030	0607001 A	0707009 A	0708001	0817005 A	0819002 A	0904487 A	0974001	1008320
ITEM DESCRIPTION	CHANNEL EXCAVATION-EARTH	EXCAVATION AND REUSE OF EXISTING CHANNEL BOTTOM MATERIAL	STRUCTURE EXCAVATION - EARTH (EXCLUDING COFFERDAM AND DEWATERING)	STRUCTURE EXCAVATION - ROCK (EXCLUDING COFFERDAM AND DEWATERING)	COFFERDAM AND DEWATERING	HANDLING WATER	GRANULAR FILL	PERVIOUS STRUCTURE BACKFILL	HMA S0.5	HMA S0.25	MATERIAL FOR TACK COAT	REMOVAL OF EXISTING BRIDGE	PRESTRESSED DECK UNITS (4'-0" X 2'-0")	ASPHALTIC PLUG EXPANSION JOINT SYSTEM	STEEL-LAMINATED ELASTOMERIC BEARINGS	FOOTING CONCRETE	ABUTMENT AND WALL CONCRETE	CONCRETE FORM LINERS	BRIDGE DECK CONCRETE	PARAPET CONCRETE	BRIDGE SIDEWALK CONCRETE	APPROACH SLAB CONCRETE	1" PREFORMED EXPANSION JOINT FILLER FOR BRIDGES	1" CLOSED CELL ELASTOMER	DEFORMED STEEL BARS-GALVANIZED	DRY RUBBLE MASONRY	MEMBRANE WATERPROOFING COLD LIQUID ELASTOMER)	DAMPPROOFING	6" GRANITE STONE CURBING FOR BRIDGES	PENETRATING SEALER PROTECTIVE COMPOUND	METAL BRIDGE RAIL (HANDRAIL)	REMOVAL OF EXISTING MASONRY	5" RIGID METAL CONDUIT IN STRUCTURE
UNIT	C.Y.	C.Y.	C.Y.	C.Y.	L.F.	L.S.	C.Y.	C.Y.	TON	TON	GAL.	L.S.	L.F.	C.F.	C.I.	C.Y.	C.Y.	S.F.	C.Y.	L.F.	C.Y.	C.Y.	S.F.	C.I.	LBS.	C.Y.	S.Y.	S.Y.	L.F.	S.Y.	L.F.	C.Y.	L.F.
TOTAL	890	35	2020	195	500	L.S.	135	900	55	30	75	L.S.	754	35	7375	275	290	590	85	130	30	65	405	625	92000	15	410	360	130	160	130	155	765
TOTAL	890	35	2020	195	500	L.S.	135	900	55	30	75	L.S.	754	35	7375	275	290	590	85	130	30	65	405	625	92000	15	410	360	130	160	130	155	765

UTILITY ITEMS

ITEM NUMBER	1301082 A	1302004 A	1303204 A	1401242 A	1401662 A	1403501 A	1504010 A
ITEM DESCRIPTION	8" DUCTILE IRON PIPE (WATER MAIN)	8" GATE VALVE	HYDRANT ASSEMBLY (WATER MAIN)	8" DUCTILE IRON PIPE (SANITARY SEWER)	SANITARY MANHOLE (4' DIA.) 0'-10' DEEP	RESET MANHOLE (SANITARY SEWER)	TEMPORARY SUPPORT OF UTILITIES
UNIT	L.F.	EA.	EA.	L.F.	EA.	EA.	L.S.
TOTAL	190	1	1	13	2	3	L.S.
TOTAL	190	1	1	13	2	3	L.S.

THE INFORMATION, INCLUDING ESTIMATED QUANTITIES OF WORK SHOWN ON THESE SHEETS IS BASED ON LIMITED INVESTIGATIONS BY THE TOWN AND IS IN NO WAY WARRANTED TO INDICATE THE TRUE CONDITIONS OR ACTUAL QUANTITIES OR DISTRIBUTION OF QUANTITIES OF WORK WHICH WILL BE REQUIRED.

NO.	DATE	DESCRIPTION

REVISIONS

SUPV.	K.O.E.
DESIGN	E.D.
DRAWN	N.S. / S.A.M.
CHECKED	J.A.W.
DATE	09/07/2021

WMC CONSULTING ENGINEERS

• WENGELL, McDONNELL & COSTELLO •
87 HOLMES ROAD
NEWINGTON, CT 06111
(860) 667-9624

PREPARED FOR

CITY OF MERIDEN
142 E MAIN STREET
MERIDEN, CT 06450

REPLACEMENT OF CEDAR STREET BRIDGE OVER HARBOR BROOK
DETAILED ESTIMATE SHEET

SIZE	PROJECT	FILE NAME	NUMBER	REV.	SHEET	OF
D	CEDAR STREET	F.D.	17088		2	32

CEDAR STREET BRIDGE REPLACEMENT
CONSTRUCTION SIGNING

	SIGN	CONNDOT	DIMENSION	DESCRIPTION	NO. REQ.'D
*	A	80-9929	72" X 48"	CEDAR STREET CLOSED TO THRU TRAFFIC EFFECTIVE MONDAY (00/00)	2
	B	80-9078	60" X 30"	BRIDGE CLOSED 0.1 MILES AHEAD. LOCAL TRAFFIC ONLY	2
	C	80-9913	60" X 10"	CEDAR STREET	15
	D	80-9710	30" X 24"	DETOUR (RIGHT ARROW)	6
	E	80-9710	30" X 24"	DETOUR (LEFT ARROW)	5
	F	80-9710	30" X 24"	DETOUR (STRAIGHT ARROW)	4
**	G	80-9080	48" X 30"	ROAD CLOSED	2
**	H	31-0552	30"	STOP	2
	J	80-9710	60" X 30"	CEDAR STREET CLOSED TO THRU TRAFFIC	5

* INDICATES SIGNS TO BE POSTED AT LEAST 2 WEEKS PRIOR TO CONSTRUCTION AND THEN COVERED OR REMOVED DURING CONSTRUCTION (SEE NOTE 7, THIS SHEET).

** INDICATES SIGNS MOUNTED ON TYPE III CONSTRUCTION BARRICADES WHICH SHALL BE INSTALLED WITH A BARRICADE WARNING LIGHT - HIGH INTENSITY.

MAINTENANCE AND PROTECTION OF TRAFFIC NOTES

1. THE CONTRACTOR SHALL LOCATE AND PLACE ALL SIGNS AS INDICATED ON THIS SHEET OR AS DIRECTED BY THE ENGINEER.
2. THE CONTRACTOR SHALL CLOSE CEDAR STREET FOR THE DURATION OF THE BRIDGE REPLACEMENT AND ROADWAY CONSTRUCTION.
3. ALL TRAFFIC OVER CEDAR STREET SHALL BE DETOURED TO PARK STREET, STATE STREET, EAST MAIN STREET, PRATT STREET AND CENTER STREET.
4. TEMPORARY PRECAST CONCRETE BARRIER CURBS (TPCBC) SHALL BE PROVIDED AT BOTH ENDS OF THE WORK AREA TO ADEQUATELY WARN, AND PROHIBIT MOTORISTS AND PEDESTRIANS FROM USING THE BRIDGE DURING CONSTRUCTION. THE TPCBC SHALL EXTEND ACROSS THE FULL WIDTH OF THE EXISTING ROADWAY AND BEYOND. THE COST OF THE TPCBC SHALL INCLUDE THE COST OF MOVING THE TBCPC TO ALLOW THE CONTRACTOR ACCESS AND EGRESS TO THE BRIDGE CONSTRUCTION SITE. THE CONTRACTOR SHALL ALSO PROVIDE MOVEABLE TYPE III CONSTRUCTION BARRICADE IN FRONT OF THE TPCBC, OR AS ORDERED BY THE ENGINEER, TO FURTHER ENSURE MOTORIST AND PEDESTRIAN SAFETY. THE CONTRACTOR SHALL TAKE ALL NECESSARY PRECAUTIONS TO ENSURE THE UPRIGHT STABILITY OF THE TYPE III CONSTRUCTION BARRICADES AT ALL TIMES.
5. ALL TRAFFIC CONTROL AND PROTECTION DEVICES, INCLUDING PAVEMENT MARKINGS, SHALL BE IN PLACE BEFORE RESPECTIVE CONSTRUCTION OPERATION COMMENCES.
6. THE CONTRACTOR SHALL POST THE ADVANCE NOTICE SIGNS AT LEAST 2 WEEKS PRIOR TO CLOSING THE ROAD. NOTICE TO PROCEED WILL BE GIVEN TO INSTALL THE ADVANCED NOTICE SIGNS, BUT THE ROAD MUST REMAIN OPEN UNTIL THE DATE ON THE ADVANCE NOTICE SIGNS.
7. ALL EXISTING CONFLICTING SIGNS SHALL BE COVERED OR REMOVED WHILE THE DETOUR IS IN EFFECT. ANY REMOVED SIGN SHALL BE REINSTALLED BEFORE THE BRIDGE IS REOPENED TO TRAFFIC.
8. ALL DETOUR SIGNS SHALL BE COVERED WHILE THE DETOUR IS NOT IN EFFECT.

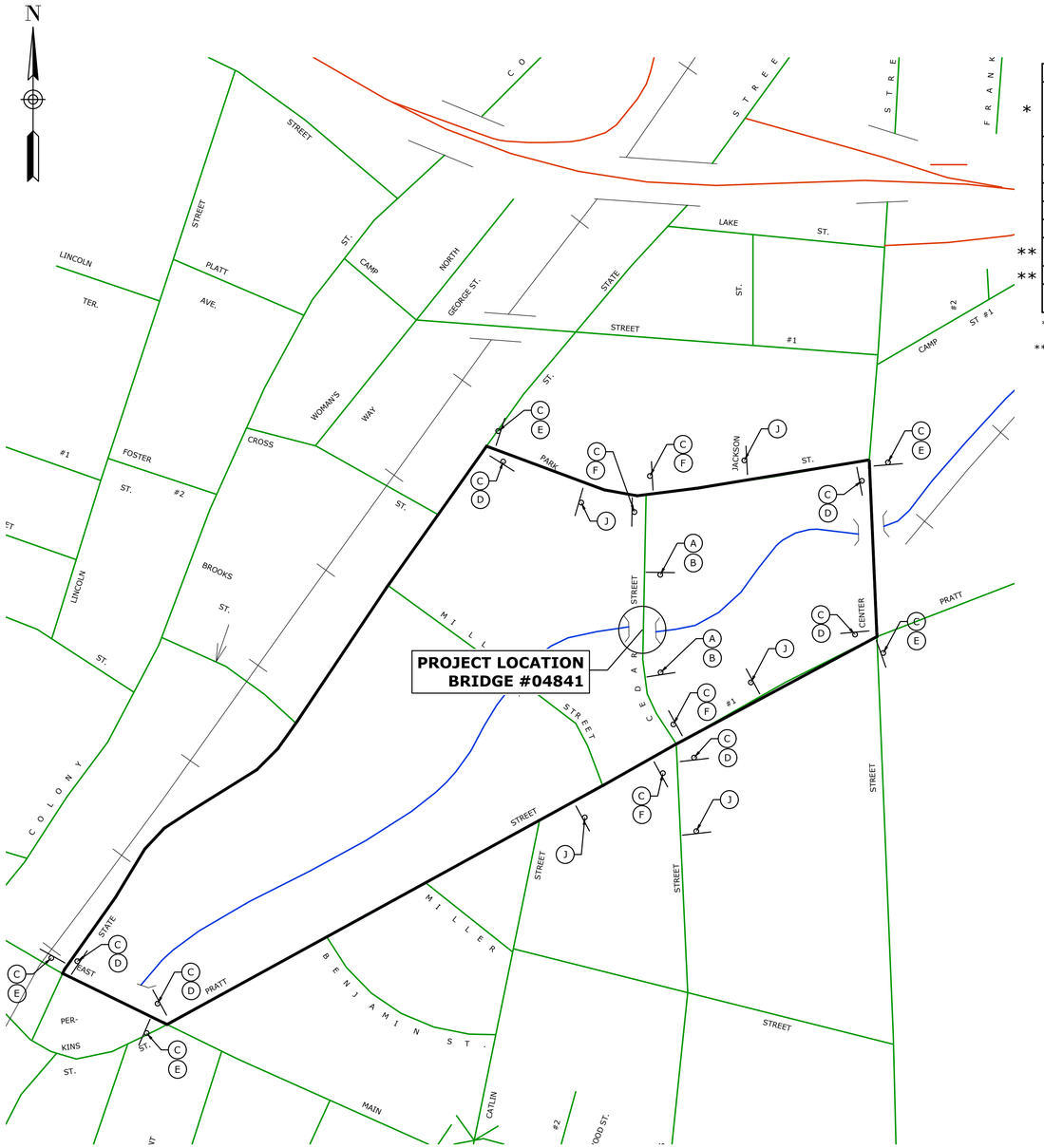

DETOUR PLAN

SCALE : 1" = 200'

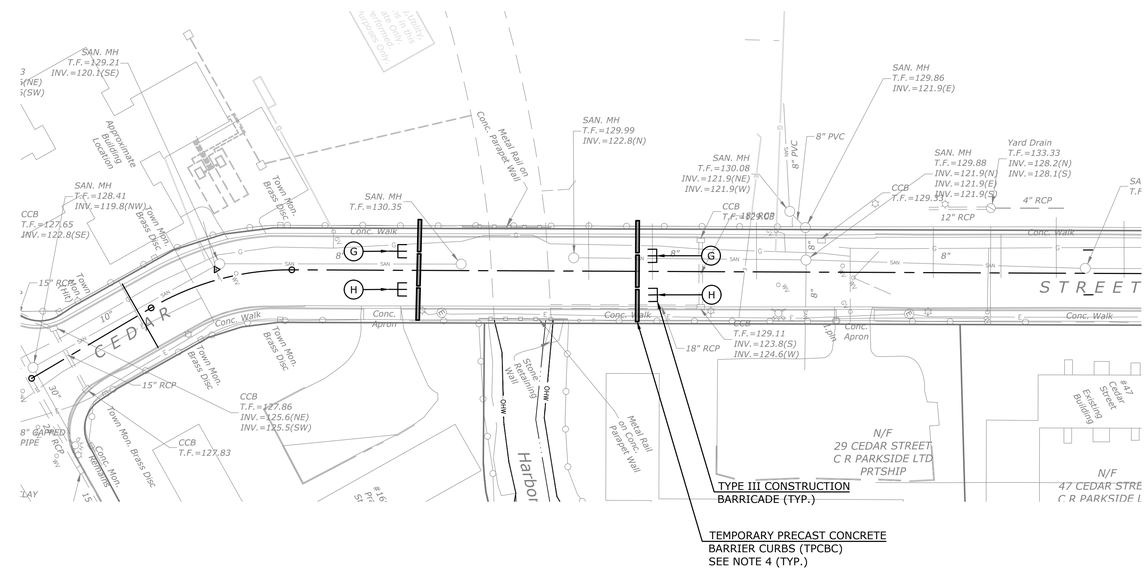

PROJECT AREA DETAIL

SCALE : 1" = 40'

THE INFORMATION, INCLUDING ESTIMATED QUANTITIES OF WORK SHOWN ON THESE SHEETS IS BASED ON LIMITED INVESTIGATIONS BY THE TOWN AND IS IN NO WAY WARRANTED TO INDICATE THE TRUE CONDITIONS OR ACTUAL QUANTITIES OR DISTRIBUTION OF QUANTITIES OF WORK WHICH WILL BE REQUIRED.

NO.	DATE	DESCRIPTION

REVISIONS

SUPV.	K.O.E.
DESIGN	E.D.
DRAWN	N.S. / S.A.M.
CHECKED	J.A.W.
DATE	09/07/2021

WMC CONSULTING ENGINEERS

• WENGELL, McDONNELL & COSTELLO •
87 HOLMES ROAD
NEWINGTON, CT 06111
(860) 667-9624

PREPARED FOR

CITY OF MERIDEN
142 E MAIN STREET
MERIDEN, CT 06450

REPLACEMENT OF CEDAR STREET BRIDGE OVER HARBOR BROOK
DETOUR PLAN

SIZE	PROJECT	FILE NAME	NUMBER	REV.	SHEET	OF
D	CEDAR STREET	F.D.	17088		3	32

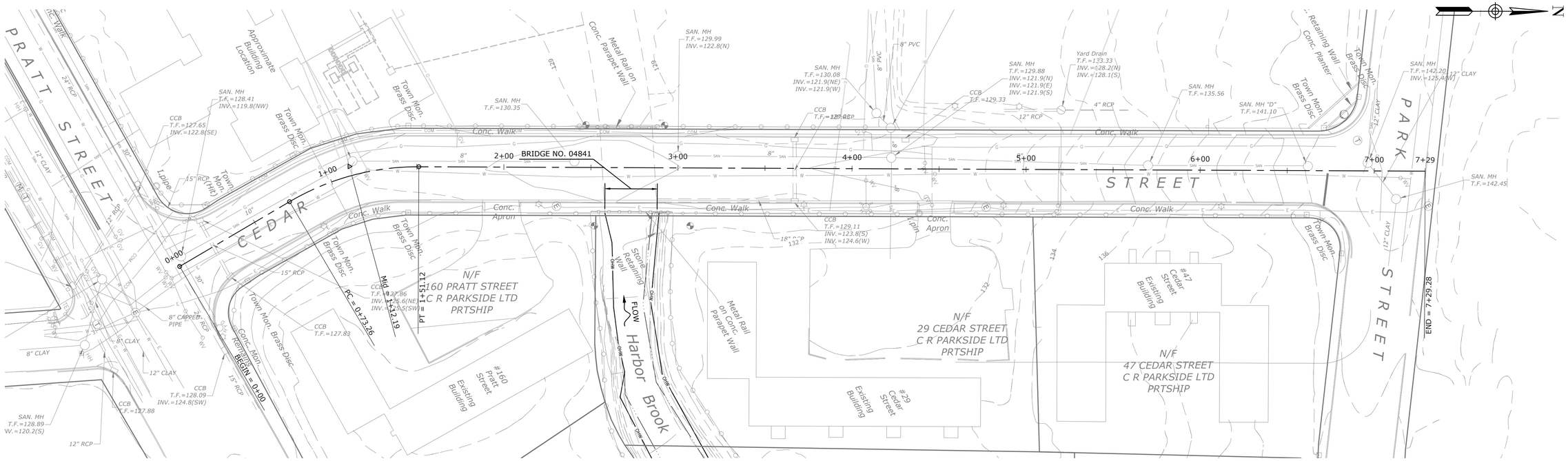

NOTES:
1. WETLANDS DELINEATED BY MMI IN 2011.
2. TOPOGRAPHY PROVIDED BY THE CITY OF MERIDEN.
3. PARCELS PROVIDED BY THE CITY OF MERIDEN.

EXISTING CONDITIONS PLAN

SCALE: 1" = 30'-0"

LEGEND	
	APPROXIMATE BORING LOCATIONS

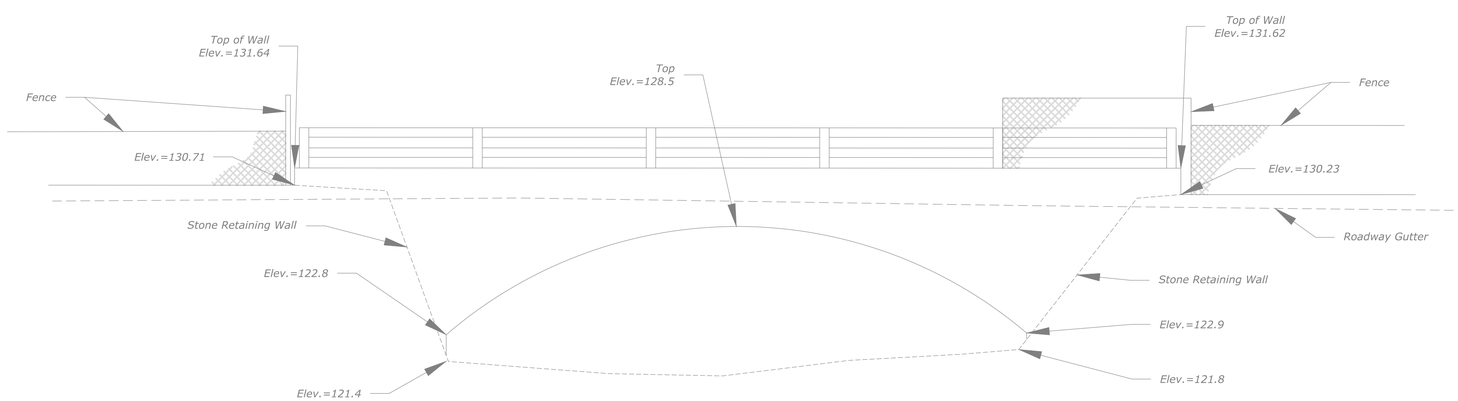

EXISTING BRIDGE ELEVATION (LOOKING DOWNSTREAM)

SCALE: 1/4" = 1'-0"

THE INFORMATION, INCLUDING ESTIMATED QUANTITIES OF WORK SHOWN ON THESE SHEETS IS BASED ON LIMITED INVESTIGATIONS BY THE TOWN AND IS IN NO WAY WARRANTED TO INDICATE THE TRUE CONDITIONS OR ACTUAL QUANTITIES OR DISTRIBUTION OF QUANTITIES OF WORK WHICH WILL BE REQUIRED.

NO.	DATE	DESCRIPTION

REVISIONS

SUPV.	K.O.E.
DESIGN	E.D.
DRAWN	N.S. / S.A.M.
CHECKED	J.A.W.
DATE	09/07/2021

WMC CONSULTING ENGINEERS

• WENGELL, McDONNELL & COSTELLO •
87 HOLMES ROAD
NEWINGTON, CT 06111
(860) 667-9624

PREPARED FOR

CITY OF MERIDEN
142 E MAIN STREET
MERIDEN, CT 06450

REPLACEMENT OF CEDAR STREET BRIDGE OVER HARBOR BROOK
EXISTING CONDITIONS PLAN

SIZE	PROJECT	FILE NAME	NUMBER	REV.	SHEET	OF
D –	CEDAR STREET –	F.D. –	17088 –		4	32

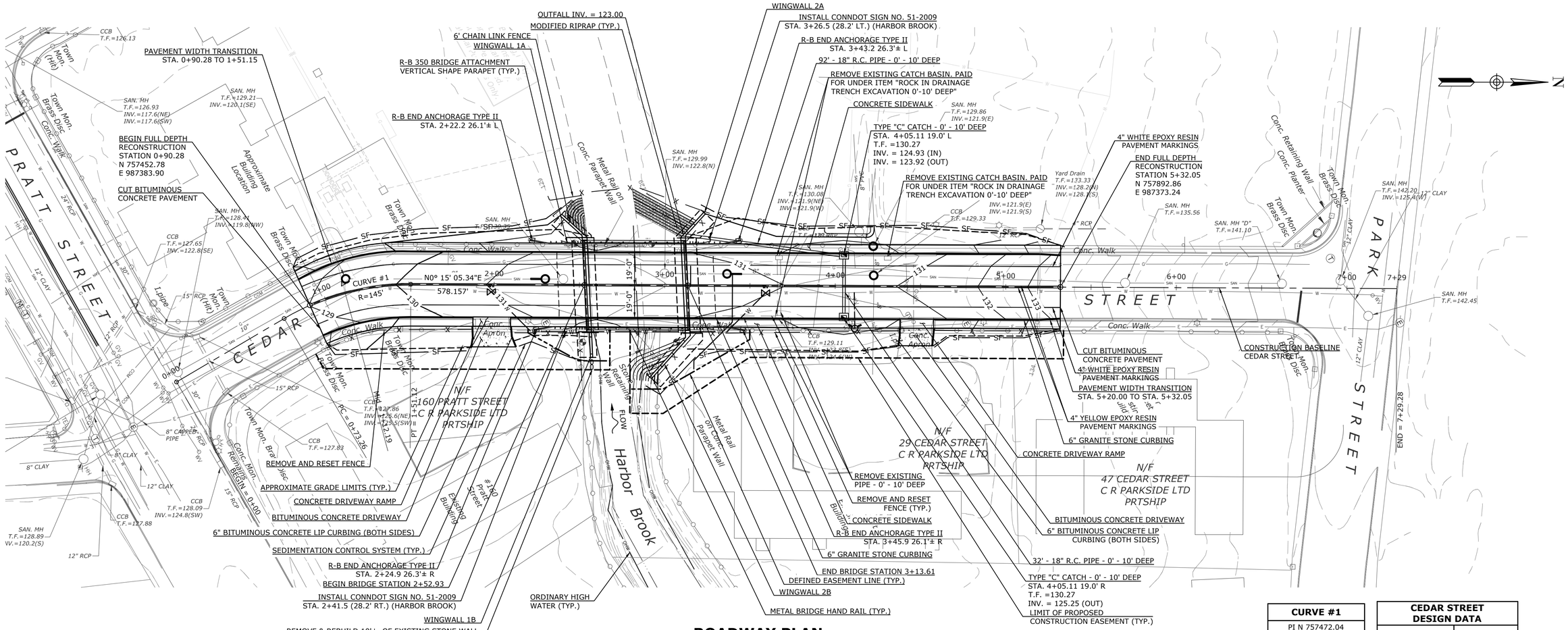

ROADWAY PLAN

SCALE: 1" = 30'-0"

CURVE #1
PI N 757472.04
PI E 987371.39
L = 77.86'
Δ = 39° 51' 43"
R = 145.00'
T = 39.89'

CEDAR STREET DESIGN DATA	
ROAD CLASS	LOCAL URBAN
DESIGN SPEED	25 MPH
ADT (2020)	776 VPD
RADIUS (MIN.)	145 FT.
e	N/A
MAXIMUM GRADE	3.75%
CROSS SLOPE	2.00%
K (SAG MIN.)	26
K (CREST MIN.)	12

NOTES:

1. TOPOGRAPHIC AND BOUNDARY SURVEY INFORMATION & BASE MAPPING PROVIDED BY MILONE & MACBROOM, INC., 99 REALTY DRIVE, CHESHIRE, CT 06410, DATED: 5/7/18, REVISED 6/5/18 AND HAS BEEN PREPARED IN ACCORDANCE WITH SECTIONS 20-300B-1 THRU 20-300B-20 OF THE REGULATIONS OF CONNECTICUT STATE AGENCIES - "MINIMUM STANDARDS FOR SURVEYS AND MAPS IN THE STATE OF CONNECTICUT" AS ENDORSED BY THE CONNECTICUT ASSOCIATION OF LAND SURVEYORS, INC. ON SEPT. 26, 1996. IT IS A TOPOGRAPHIC SURVEY CONFORMING TO TOPOGRAPHIC ACCURACY CLASS T-2, AND IS INTENDED TO DEPICT THE EXISTING CONDITIONS OF THE SITE.
2. HORIZONTAL CONTROL BASED ON N.A.D. 1983.
3. VERTICAL DATUM BASED ON N.G.V.D. 1929.
4. CONTOURS PROVIDED BY THE CITY OF MERIDEN.
5. STREET LINES FOR ALL ROADWAYS SHOWN ARE BASED UPON CITY OF MERIDEN TAX ASSESSORS MAPS.
6. PROPERTY LINES ARE BASED UPON CITY OF MERIDEN TAX ASSESSORS MAPS AND LIMITED RESEARCH. PROPERTY LINES ARE NOT TO BE CONSIDERED AS ACCURATE UNTIL SUCH TIME AS AN ACCURATE SURVEY IS PERFORMED.
7. ALL DIMENSIONS ARE SHOWN IN FEET UNLESS NOTED OTHERWISE. ALL ELEVATIONS ARE GIVEN IN FEET. WHEN THE ELEVATIONS ARE GIVEN TO LESS THAN THREE DECIMAL PLACES, THE OMITTED DIGITS SHALL BE ASSUMED TO BE ZEROS.
8. UTILITY LOCATIONS AS SHOWN ARE APPROXIMATE AND SHALL BE VERIFIED BY THE CONTRACTOR IN THE FIELD. CALL BEFORE YOU DIG 1-800-922-4455. IN ADDITION THE CONTRACTOR SHALL COORDINATE HIS CONSTRUCTION ACTIVITIES NEAR UTILITY LOCATION WITH RESPECTIVE UTILITY REPRESENTATIVES. THE CONTRACTOR SHALL BE HELD RESPONSIBLE FOR DISRUPTION AND REPAIRS OF EXISTING INDIVIDUAL UTILITY SERVICE CONNECTION.
9. LIMIT OF INLAND WETLANDS DELINEATED BY MMI IN 2011.
10. UNCONFINED IN-STREAM ACTIVITIES MUST BE LIMITED TO THE TIME PERIOD JUNE 1 THROUGH SEPTEMBER 30.
11. THE PROJECT SHOULD NOT BE CONDUCTED IN A MANNER WHICH IMPEDES STREAM FLOW.
12. EFFLUENT FROM DEWATERED WORK AREA(S) SHOULD NOT BE DISCHARGED DIRECTLY TO THE STREAM BUT MUST BE PROCESSED THROUGH TREATMENT STRUCTURE(S). SUCH STRUCTURES SHOULD NOT BE LOCATED WITHIN THE STREAM CHANNEL OR ADJACENT WETLANDS.
13. ALL APPROPRIATE EROSION AND SEDIMENT CONTROL MEASURES SHOULD BE ESTABLISHED PRIOR TO AND MAINTAINED THROUGHOUT ALL CONSTRUCTION PHASES. SEE SEPARATE PLAN SHEET FOR EROSION & SEDIMENTATION DETAILS.
14. ALL CUT OR FILL SLOPES GREATER THAN 2H:1V SHALL BE COVERED WITH JUTE NETTING UNTIL PERMANENT GROUND COVER IS ESTABLISHED AS MAY BE DIRECTED BY THE ENGINEER.
15. ANY ACTIVITIES OTHER THAN THOSE SHOWN ON THE PLANS OR DETAILED IN THE WETLANDS PERMIT THAT OCCUR IN THE REGULATED WETLANDS AREA SHALL BE SUBJECT TO APPROVAL BY THE LOCAL INLAND/WETLANDS AUTHORITY OR ITS DESIGNATED REPRESENTATIVE.
16. UTILITY RELOCATIONS: OVERHEAD OR UNDERGROUND UTILITY LINES MAY BE IN CONFLICT WITH DRIVING SHEET PILING, THE SETTING OF PRECAST BOX CULVERT SECTIONS AND OTHER CONSTRUCTION. DEPENDING UPON THE CONTRACTOR'S CONSTRUCTION OPERATIONS, THESE UTILITIES MAY NEED TO BE TEMPORARILY RELOCATED FOR PORTIONS OF THE CONSTRUCTION OPERATIONS AND THEN MOVED BACK TO PERMANENT LOCATIONS WHICH MAY BE OTHER THAN CURRENT LOCATIONS. EXCEPT FOR UTILITY WORK SPECIFICALLY INCLUDED IN THIS CONTRACT THE ACTUAL UTILITY RELOCATIONS (PERMANENT OR TEMPORARY) WILL BE THE RESPONSIBILITY OF THE INDIVIDUAL UTILITY OWNER, HOWEVER THE CONTRACTOR WILL BE REQUIRED TO COORDINATE ALL UTILITY RELOCATIONS WITH EACH UTILITY OWNER AND TO PHASE HIS WORK AS REQUIRED TO ACCOMMODATE TEMPORARY AND PERMANENT UTILITY RELOCATION WORK.
17. THERE IS NO FEMA FLOODWAY FOR THIS REACH OF HARBOR BROOK. DEPICTED FLOOD LIMITS EXTEND BEYOND LIMITS OF PLAN.

PAVEMENT MARKING NOTES:

1. FINAL PAVEMENT MARKING SHALL BE EPOXY RESIN AND SHALL MATCH EXISTING MARKINGS AT CONSTRUCTION LIMITS.
2. PAVEMENT MARKINGS SHALL BE INSTALLED PER TRAFFIC STANDARD SHEET TR-1210_04 "PAVEMENT MARKING LINES AND SYMBOLS" AND TR-1210_08 "PAVEMENT MARKINGS FOR NON FREEWAYS".

SIGNING NOTES:

1. ALL EXISTING SIGNS WITHIN THE CONSTRUCTION LIMITS SHALL BE REMOVED AND RESET UNLESS OTHERWISE NOTED ON THE PLAN OR DIRECTED BY THE ENGINEER. REMOVING AND RESETTING SIGNS SHALL BE PAID FOR IN "CLEARING AND GRUBBING".
2. SIGNS TO BE INSTALLED PER TRAFFIC STANDARD SHEETS TR-1208_01 "SIGN PLACEMENT AND RETROREFLECTIVE STRIP DETAILS" AND TR-1208_02 "METAL SIGN POSTS AND SIGN MOUNTING DETAILS", EXCEPT AS NOTED.
3. EXACT SIGN LOCATIONS TO BE VERIFIED BY THE ENGINEER.
4. SIGNS SHALL BE PLACED NO CLOSER THAN 10 FEET FROM UTILITY POLES.

THE INFORMATION, INCLUDING ESTIMATED QUANTITIES OF WORK SHOWN ON THESE SHEETS IS BASED ON LIMITED INVESTIGATIONS BY THE TOWN AND IS IN NO WAY WARRANTED TO INDICATE THE TRUE CONDITIONS OR ACTUAL QUANTITIES OR DISTRIBUTION OF QUANTITIES OF WORK WHICH WILL BE REQUIRED.

NO.	DATE	DESCRIPTION

REVISIONS

SUPV.	K.O.E.
DESIGN	E.D.
DRAWN	N.S. / S.A.M.
CHECKED	J.A.W.
DATE	09/07/2021

WMC CONSULTING ENGINEERS
• WENGELL, McDONNELL & COSTELLO •
87 HOLMES ROAD
NEWINGTON, CT 06111
(860) 667-9624

PREPARED FOR

CITY OF MERIDEN
142 E MAIN STREET
MERIDEN, CT 06450

REPLACEMENT OF CEDAR STREET BRIDGE OVER HARBOR BROOK
ROADWAY PLAN

SIZE	PROJECT	FILE NAME	NUMBER	REV.	SHEET OF
D –	CEDAR STREET –	F.D. –	17088 –		5 OF 32

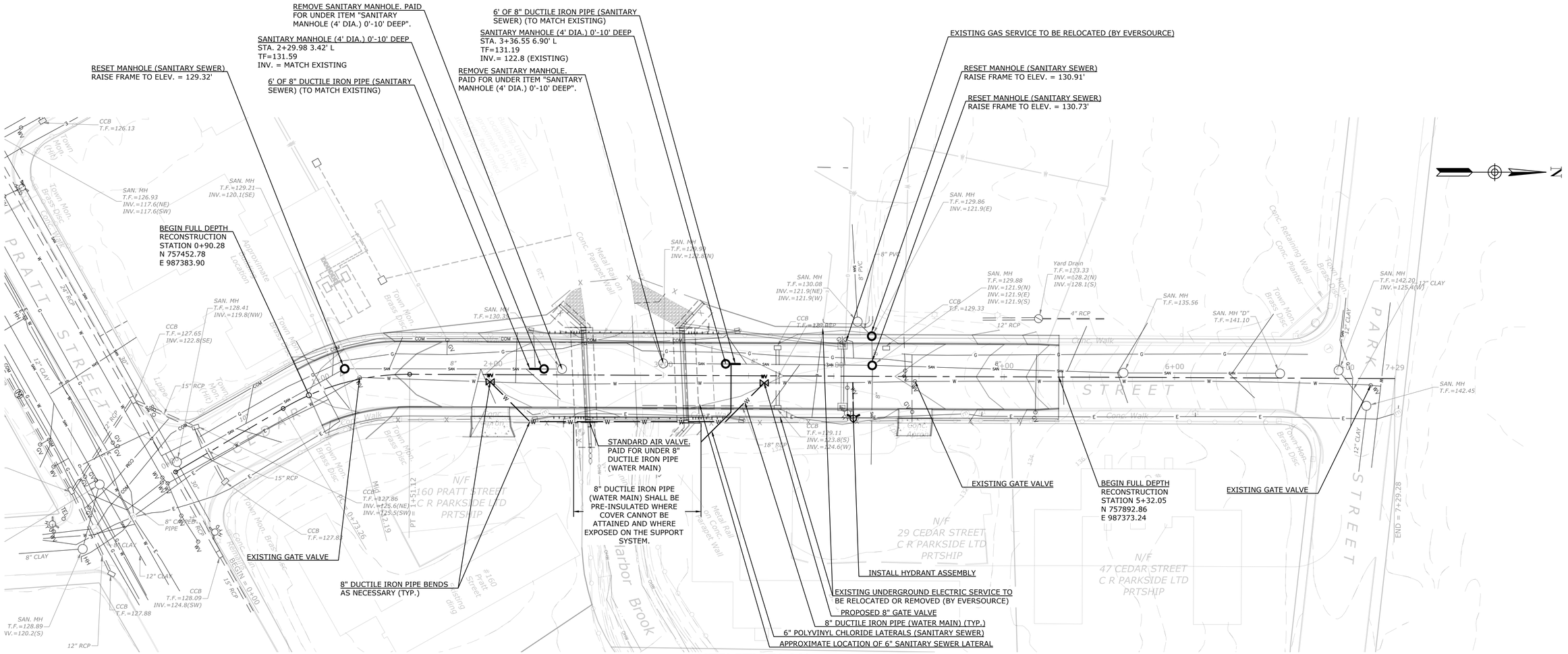

UTILITY PLAN

SCALE: 1" = 30'-0"

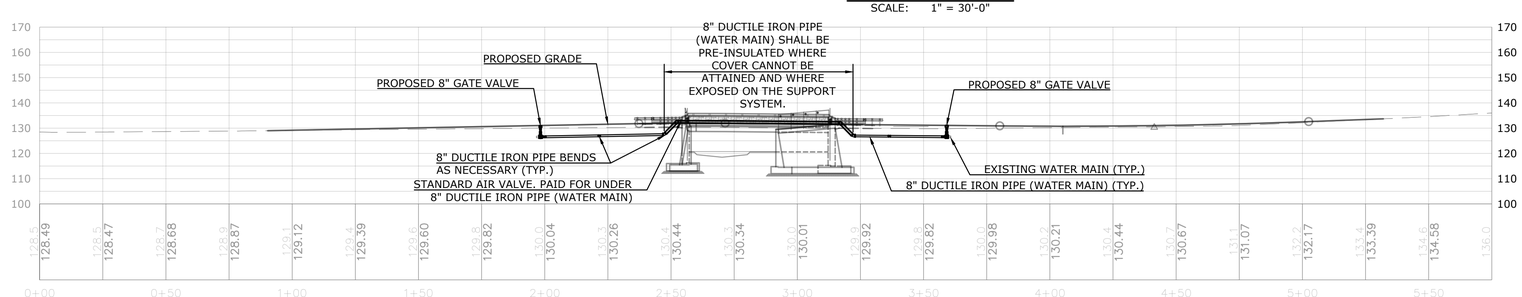

WATER MAIN PROFILE

SCALE: 1" = 30'-0"

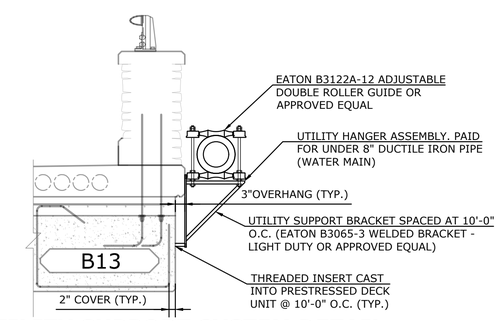

UTILITY SUPPORT SYSTEM DETAIL

SCALE: 1/2" = 1'-0"

THE INFORMATION, INCLUDING ESTIMATED QUANTITIES OF WORK SHOWN ON THESE SHEETS IS BASED ON LIMITED INVESTIGATIONS BY THE TOWN AND IS IN NO WAY WARRANTED TO INDICATE THE TRUE CONDITIONS OR ACTUAL QUANTITIES OR DISTRIBUTION OF QUANTITIES OF WORK WHICH WILL BE REQUIRED.

NO.	DATE	DESCRIPTION

REVISIONS

SUPV.	K.O.E.
DESIGN	E.D.
DRAWN	N.S. / S.A.M.
CHECKED	J.A.W.
DATE	09/07/2021

WMC CONSULTING ENGINEERS

• WENGELL, McDONNELL & COSTELLO •
87 HOLMES ROAD
NEWINGTON, CT 06111
(860) 667-9624

PREPARED FOR

CITY OF MERIDEN
142 E MAIN STREET
MERIDEN, CT 06450

REPLACEMENT OF CEDAR STREET BRIDGE OVER HARBOR BROOK
UTILITY PLAN

SIZE	PROJECT	FILE NAME	NUMBER	REV.	SHEET	OF
D –	CEDAR STREET –	F.D. –	17088 –		6	32

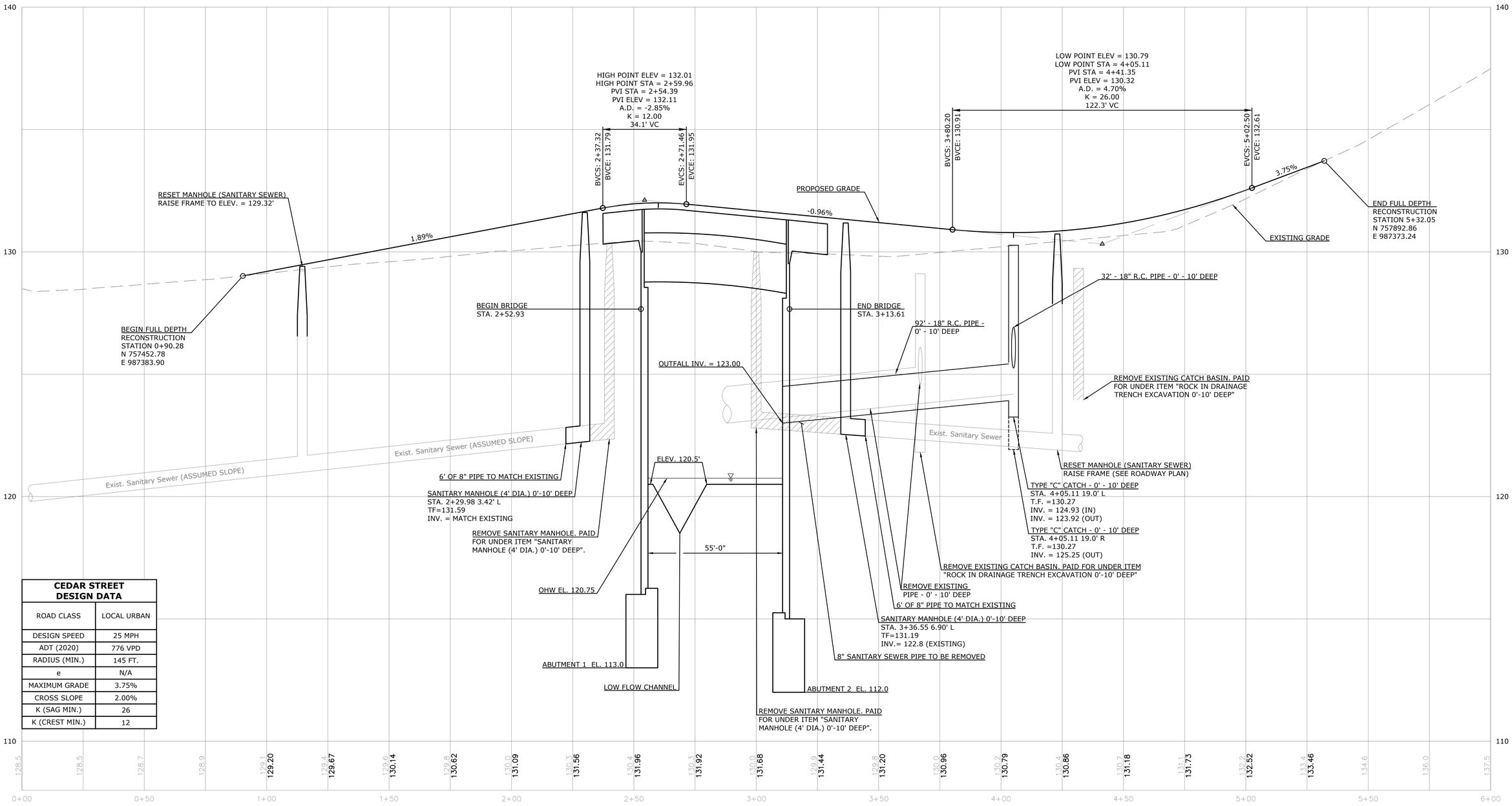

CEDAR STREET DESIGN DATA	
ROAD CLASS	LOCAL URBAN
DESIGN SPEED	25 MPH
ADT (2020)	776 VPD
RADIUS (MIN.)	145 FT.
e	N/A
MAXIMUM GRADE	3.75%
CROSS SLOPE	2.00%
K (SAG MIN.)	26
K (CREST MIN.)	12

PROPOSED ROADWAY PROFILE

HORIZONTAL SCALE: 1" = 20'-0"
VERTICAL SCALE: 1" = 2'-0"

THE INFORMATION, INCLUDING ESTIMATED QUANTITIES OF WORK SHOWN ON THESE SHEETS IS BASED ON LIMITED INVESTIGATIONS BY THE TOWN AND IS IN NO WAY WARRANTED TO INDICATE THE TRUE CONDITIONS OR ACTUAL QUANTITIES OR DISTRIBUTION OF QUANTITIES OF WORK WHICH WILL BE REQUIRED.

NO.	DATE	DESCRIPTION

REVISIONS

SUPV.	K.O.E.
DESIGN	E.D.
DRAWN	N.S. / S.A.M.
CHECKED	J.A.W.
DATE	09/07/2021

WMC CONSULTING ENGINEERS

• WENGELL, McDONNELL & COSTELLO •
87 HOLMES ROAD
NEWINGTON, CT 06111
(860) 667-9624

PREPARED FOR

CITY OF MERIDEN
142 E MAIN STREET
MERIDEN, CT 06450

REPLACEMENT OF CEDAR STREET BRIDGE OVER HARBOR BROOK
ROADWAY PROFILE

SIZE	PROJECT	FILE NAME	NUMBER	REV.	SHEET	OF
D –	CEDAR STREET –	F.D. –	17088 –		7	32

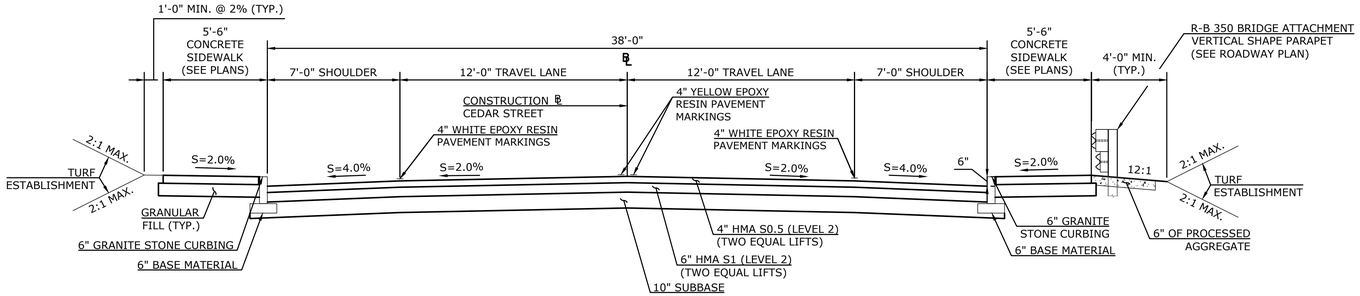

TYPICAL ROADWAY SECTION

SCALE: 1/4" = 1'-0"

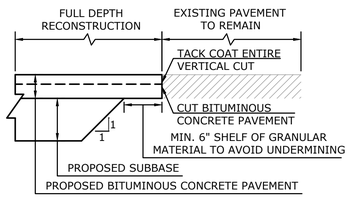

ROADWAY PAVEMENT TRANSITION DETAIL AT CONSTRUCTION LIMITS

SCALE: N.T.S.

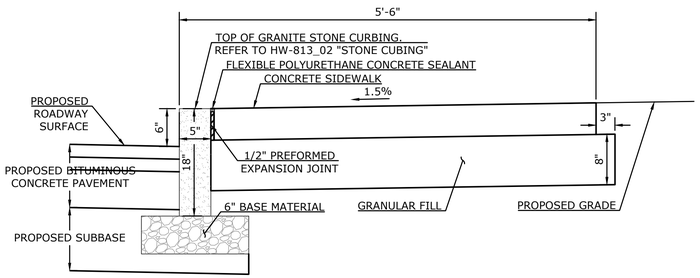

SIDEWALK DETAIL

SCALE: 1" = 1'-0"

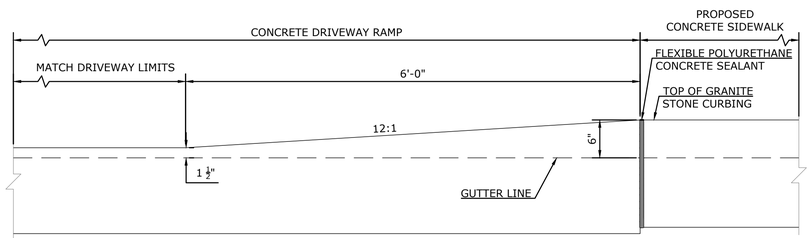

CONCRETE DRIVEWAY RAMP SECTION (A-A)

SCALE: 1" = 1'-0"

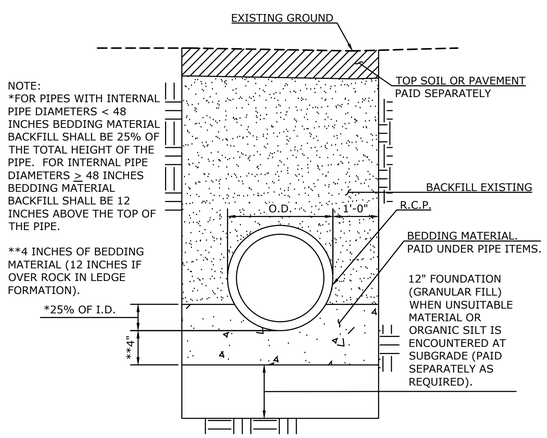

TRENCH SECTION FOR R.C.P.

SCALE: N.T.S.

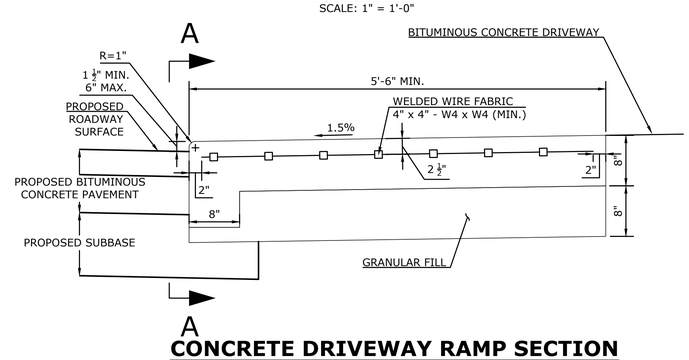

CONCRETE DRIVEWAY RAMP SECTION

SCALE: 1" = 1'-0"

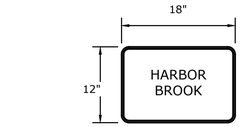

CONNDOT SIGN NO. 51-2009

NOT TO SCALE

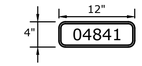

BRIDGE IDENTIFCATION PLACARD

NOT TO SCALE

SCHEDULE OF SIGNS							
CONNDOT SIGN NO.	SIZE	LEGEND	LOCATION	ALUM. THK.	POSTS	BACKGROUND COLOR	LEGEND COLOR
51-2009	18" X 12"	HARBOR BROOK	STA. 2+80±, 19± R	0.080	1	GREEN	WHITE
51-2009	18" X 12"	HARBOR BROOK	STA. 3+78±, 24'± L	0.080	1	GREEN	WHITE

* NOTE: ALL COLORS SHALL BE TYPE IX RETROREFLECTIVE WITH THE EXCEPTION OF BLACK WHICH SHALL BE OPAQUE.

NOTES:

1. FOR SPECIFIC SIGN DESIGN CONTACT CONN. D.O.T., DIVISION OF TRAFFIC ENGINEERING. FOR BOLT HOLE PATTERN REFER TO FHWA PUBLICATION "STANDARD HIGHWAY SIGNS". SIGNS OF DIFFERENT DIMENSIONS TO BE ERECTED ON THE SAME POSTS, OR SPAN/MAST ARM MOUNTED, MAY REQUIRE SPECIAL BOLT HOLE PATTERNS.
2. POSTS - SEE STANDARD SHEET TR-1208_02 - "METAL SIGN POSTS AND SIGN MOUNTING DETAILS."
3. POSTS - SHALL BE 4 LBS./FT.
4. SIGNS SHALL BE FABRICATED OF ONE CONTINUOUS PIECE OF SHEET ALUMINUM. SPLICING OF SHEET ALUMINUM WILL NOT BE ACCEPTED.
5. SIGNS SHALL BE PAID FOR UNDER ITEM "SIGN FACE-SHEET ALUMINIUM (TYPE IX RETROREFLECTIVE SHEETING)".

BRIDGE IDENTIFICATION PLACARDS:
THE CONTRACTOR SHALL PROVIDE AND INSTALL NEW BRIDGE IDENTIFICATION SIGNS AT THE LEADING END OF EACH BRIDGE END BLOCK ON THE TRAFFIC SIDE. THE SIGNS SHALL BE FABRICATED WITH 40 GAUGE ALUMINUM SHEET METAL. THE SIGNS SHALL BE 4" X 12" WITH 3" WHITE REFLECTIVE BLOCK LETTERS ON GREEN REFLECTIVE SHEETING. EACH SIGN SHALL READ: 04841. ALL COSTS ASSOCIATED WITH PROVIDING AND INSTALLING THE BRIDGE SIGNS SHALL BE COVERED UNDER THE ITEM #1208931-SIGN FACE SHEET ALUMINUM (TYPE IX RETROREFLECTIVE SHEETING). THE FINAL LOCATION AND ATTACHMENT METHOD FOR THE SIGNS WILL BE APPROVED BY THE ENGINEER PRIOR TO INSTALLATION.

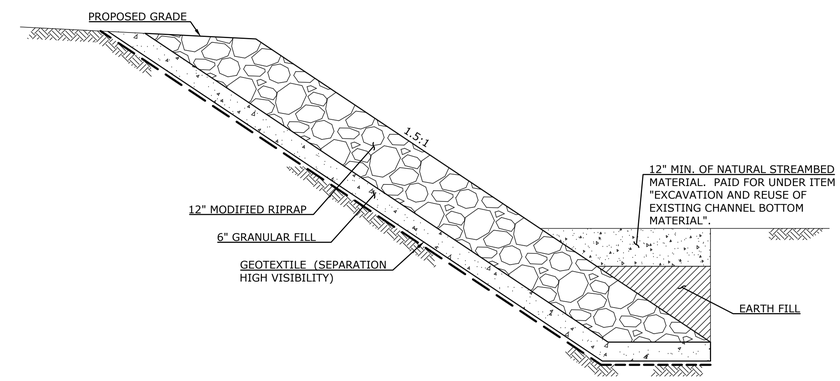

RIPRAP DETAIL

SCALE: 1" = 2'

THE INFORMATION, INCLUDING ESTIMATED QUANTITIES OF WORK SHOWN ON THESE SHEETS IS BASED ON LIMITED INVESTIGATIONS BY THE TOWN AND IS IN NO WAY WARRANTED TO INDICATE THE TRUE CONDITIONS OR ACTUAL QUANTITIES OR DISTRIBUTION OF QUANTITIES OF WORK WHICH WILL BE REQUIRED.

NO.	DATE	DESCRIPTION

REVISIONS

SUPV.	K.O.E.
DESIGN	E.D.
DRAWN	N.S. / S.A.M.
CHECKED	J.A.W.
DATE	09/07/2021

WMC CONSULTING ENGINEERS
• WENGELL, McDONNELL & COSTELLO •
87 HOLMES ROAD
NEWINGTON, CT 06111
(860) 667-9624

PREPARED FOR

CITY OF MERIDEN
142 E MAIN STREET
MERIDEN, CT 06450

REPLACEMENT OF CEDAR STREET BRIDGE OVER HARBOR BROOK
ROADWAY DETAILS

SIZE	PROJECT	FILE NAME	NUMBER	REV.	SHEET	OF
D –	CEDAR STREET –	F.D. –	17088 –		8	32

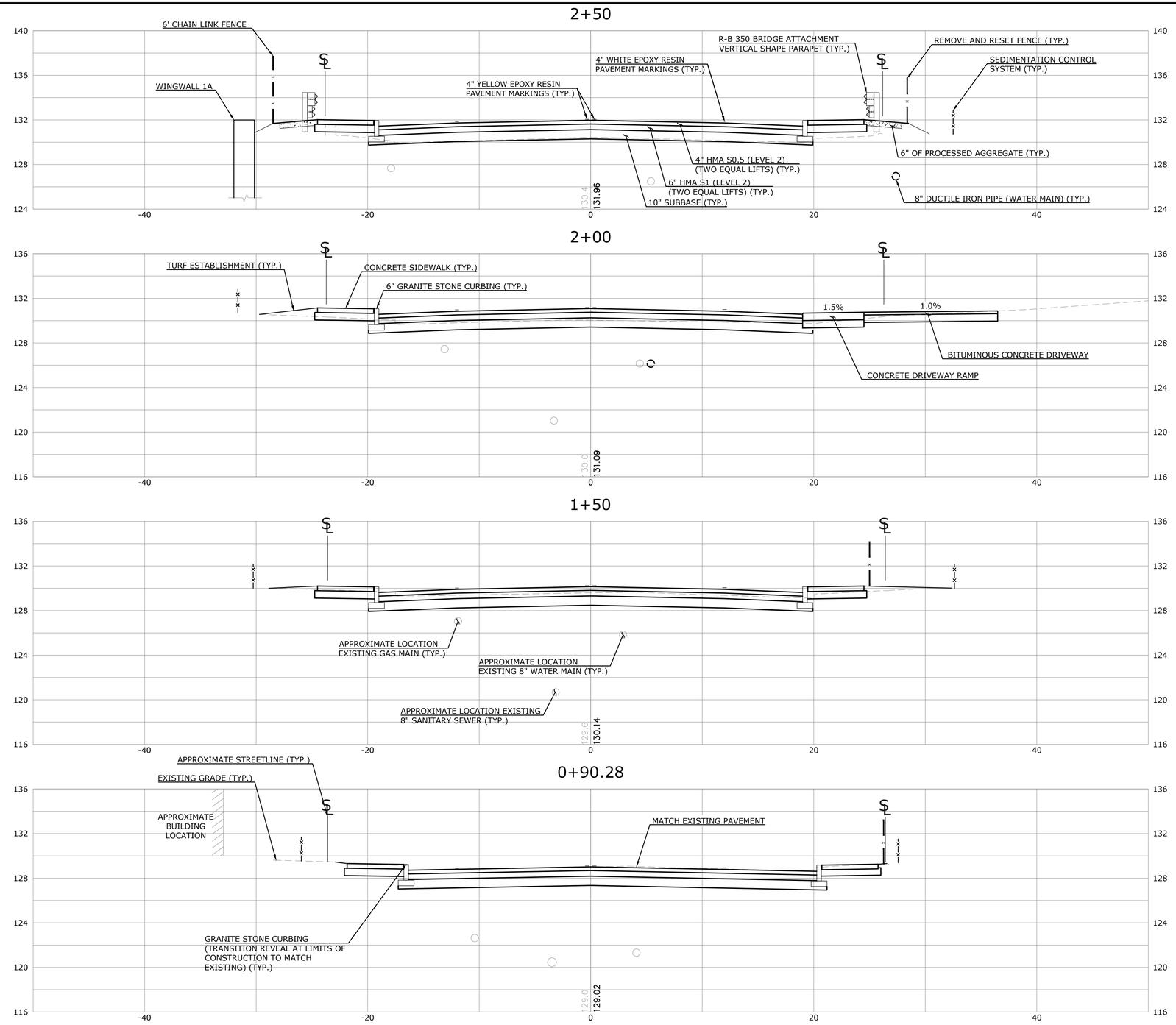

ROADWAY SECTIONS

SCALE: 1" = 5'-0"

THE INFORMATION, INCLUDING ESTIMATED QUANTITIES OF WORK SHOWN ON THESE SHEETS IS BASED ON LIMITED INVESTIGATIONS BY THE TOWN AND IS IN NO WAY WARRANTED TO INDICATE THE TRUE CONDITIONS OR ACTUAL QUANTITIES OR DISTRIBUTION OF QUANTITIES OF WORK WHICH WILL BE REQUIRED.

NO.	DATE	DESCRIPTION

REVISIONS

SUPV.	K.O.E.
DESIGN	E.D.
DRAWN	N.S. / S.A.M.
CHECKED	J.A.W.
DATE	09/07/2021

WMC CONSULTING ENGINEERS
• WENGELL, McDONNELL & COSTELLO •
87 HOLMES ROAD
NEWINGTON, CT 06111
(860) 667-9624

PREPARED FOR

CITY OF MERIDEN
142 E MAIN STREET
MERIDEN, CT 06450

REPLACEMENT OF CEDAR STREET BRIDGE OVER HARBOR BROOK
ROADWAY SECTIONS 1

SIZE	PROJECT	FILE NAME	NUMBER	REV.	SHEET	OF
D	CEDAR STREET	F.D.	17088		9	32

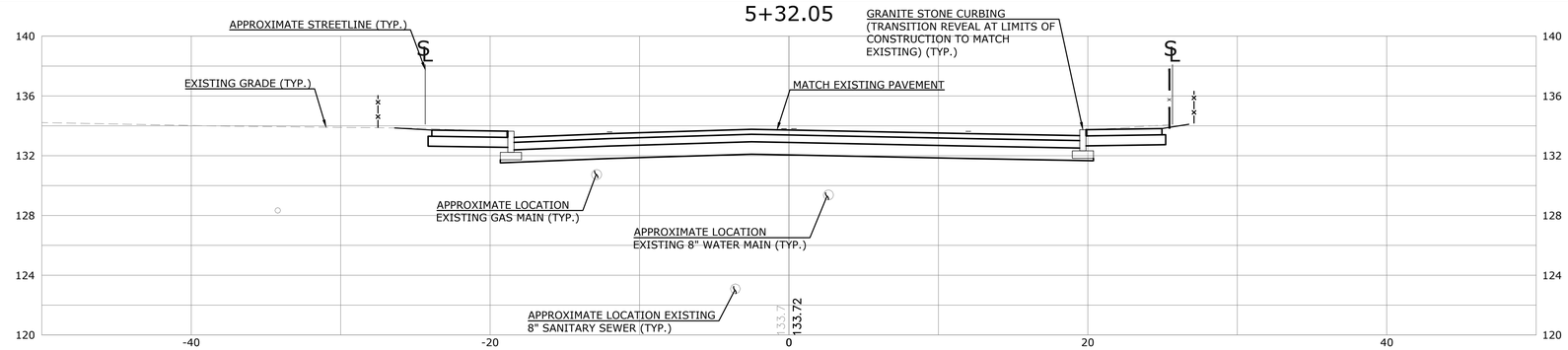

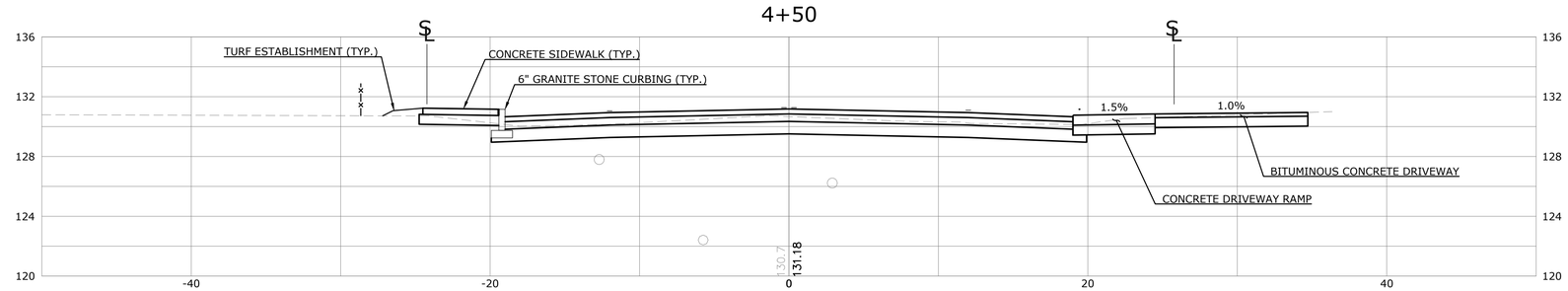

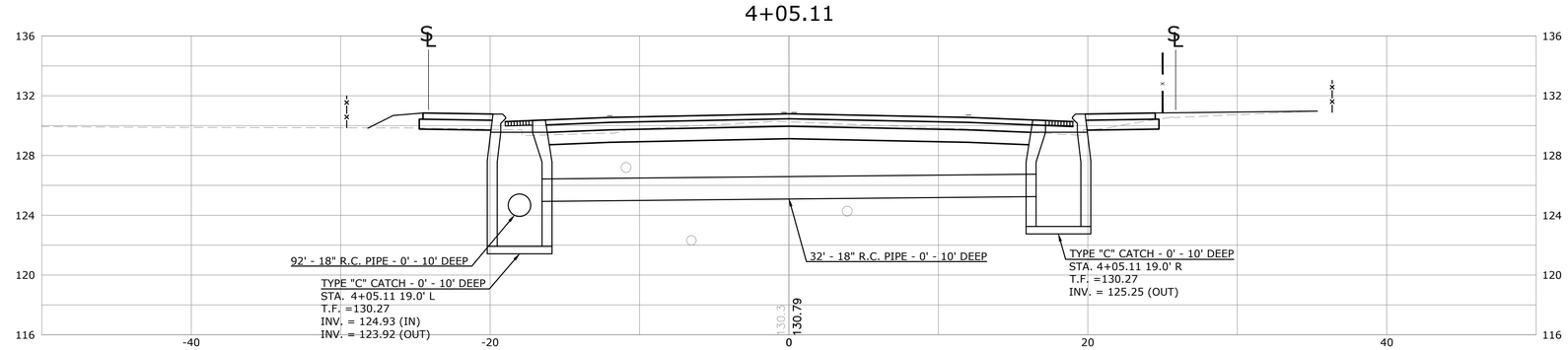

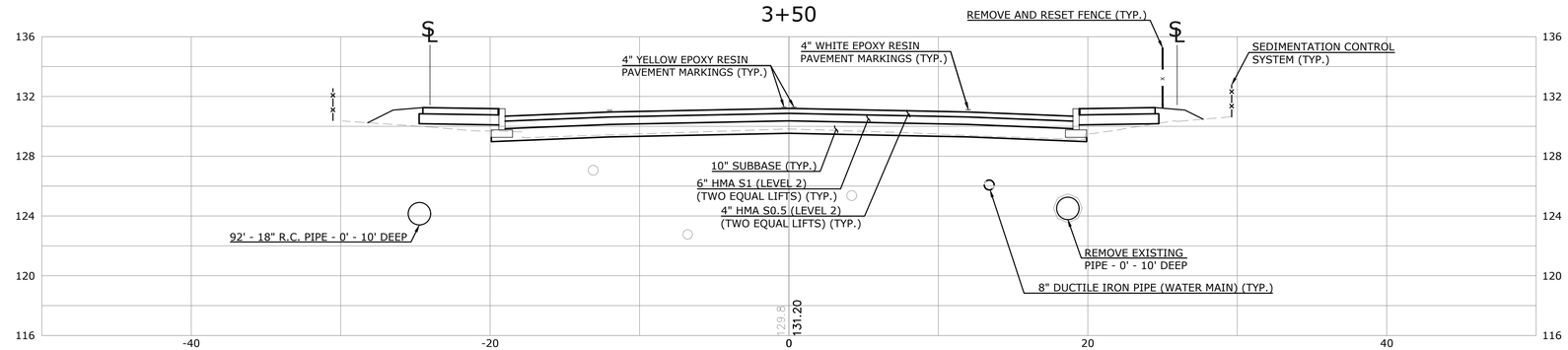

ROADWAY SECTIONS

SCALE: 1" = 5'-0"

THE INFORMATION, INCLUDING ESTIMATED QUANTITIES OF WORK SHOWN ON THESE SHEETS IS BASED ON LIMITED INVESTIGATIONS BY THE TOWN AND IS IN NO WAY WARRANTED TO INDICATE THE TRUE CONDITIONS OR ACTUAL QUANTITIES OR DISTRIBUTION OF QUANTITIES OF WORK WHICH WILL BE REQUIRED.

NO.	DATE	DESCRIPTION

REVISIONS

SUPV.	K.O.E.
DESIGN	E.D.
DRAWN	N.S. / S.A.M.
CHECKED	J.A.W.
DATE	09/07/2021

WMC CONSULTING ENGINEERS

• WENGELL, McDONNELL & COSTELLO •
87 HOLMES ROAD
NEWINGTON, CT 06111
(860) 667-9624

PREPARED FOR

CITY OF MERIDEN

142 E MAIN STREET

MERIDEN, CT 06450

REPLACEMENT OF CEDAR STREET BRIDGE OVER HARBOR BROOK
ROADWAY SECTIONS 2

SIZE	PROJECT	FILE NAME	NUMBER	REV.	SHEET	OF
D –	CEDAR STREET –	F.D. –	17088 –		10	33

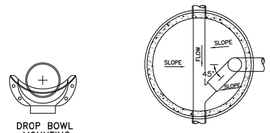

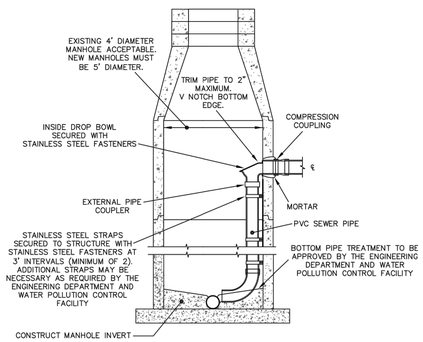

INSIDE DROP MANHOLE
SANITARY SEWER

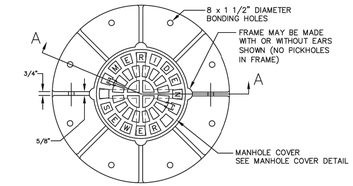

PLAN

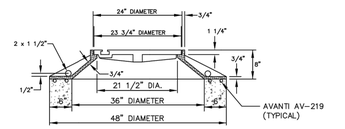

FRAME WEIGHT 427 LBS ±3%
COVER WEIGHT 175 LBS ±3%

SECTION A–A

NOTES

1. MANHOLE FRAME AND COVER TO BE LeBARON FOUNDARY INC. CATALOG NUMBER LJ 116 OR APPROVED EQUAL WITH A MINIMUM WEIGHT OF 602 LBS ±3%
2. MACHINE BEARING SURFACE REQUIRED ON THE FRAME SEAT AND COVER.

SANITARY SEWER MANHOLE FRAME

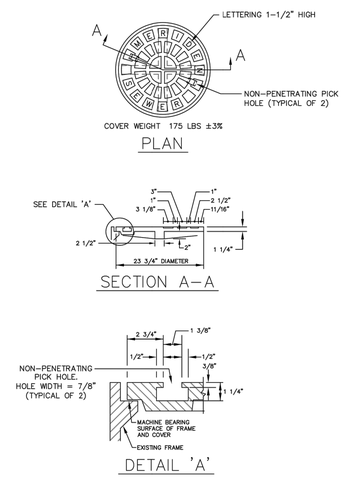

SANITARY SEWER MANHOLE COVER

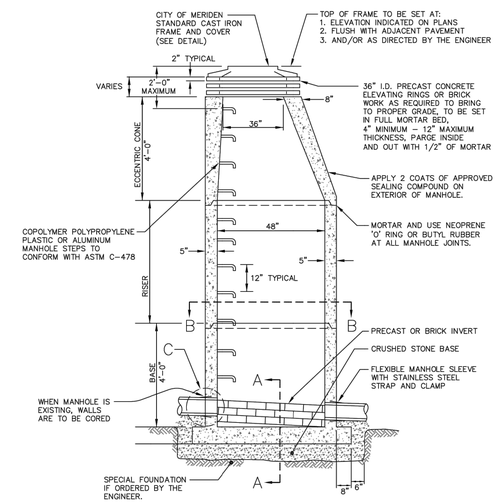

SANITARY SEWER MANHOLE

GENERAL NOTES FOR MANHOLES:

1. Backfill all manholes with bank-run gravel.
2. All pipe, chimney, and drop encasements to be class 'A' concrete. Class 'A' concrete shall be 3000 psi strength at 28 days.
3. Manholes which are located in rights-of-way off City streets shall have bolt down manhole covers.

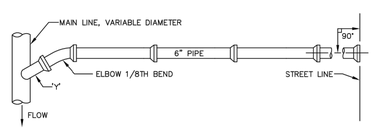

TYPICAL HOUSE CONNECTION LATERAL
PLAN VIEW

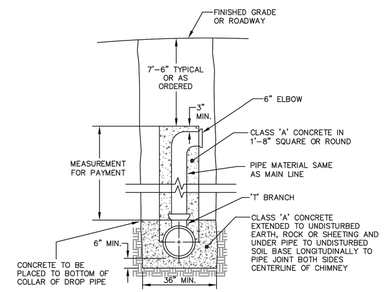

TYPICAL CHIMNEY

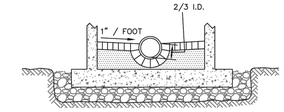

SECTION A–A

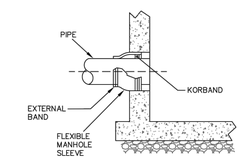

VIEW C
CORING OF EXISTING MANHOLE

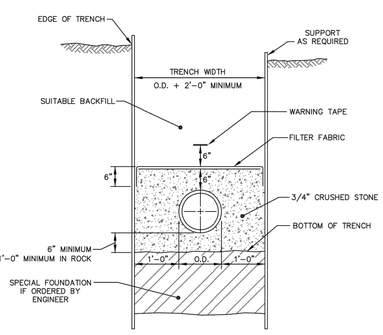

TYPICAL TRENCH SECTION
SANITARY SEWER

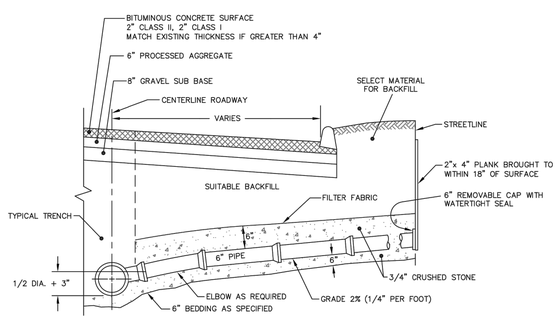

TYPICAL HOUSE CONNECTION LATERAL
PROFILE VIEW

SANITARY SEWER MAIN EXTENSION STANDARD NOTES:

1. The sanitary sewer main and service connection must be constructed in accordance with the City of Meriden Department of Public Works Standards and Specifications.
2. The Contractor must contact "Call Before You Dig" at 1-800-922-4455 for location and marking of all existing utilities prior to any excavation.
3. Upon completion of the sanitary sewer main installation, as-built plans must be submitted to the City of Meriden Engineering Division and certified by a licensed Land Surveyor or Civil Engineer. These plans must be in accordance with the Engineering Division standards.
4. Sanitary sewer lines shall be a minimum of ten feet apart horizontally and 18" apart vertically from any water line.
5. A pre-construction meeting must be held one week prior to beginning construction to include the Contractor, Design Engineering, and City Engineering staff. The Contractor shall be responsible for organizing this meeting.
6. The City Public Works Facility Inspector must be notified by the Contractor a minimum of 48 hours prior to beginning construction.
7. Final wye locations must be coordinated with the individual property owners prior to begining construction.
8. A public hearing must be held for any sanitary sewer main extension and Public Utilities Commision approval will be required.
9. Sanitary sewer main lines must pass a low pressure air test per City of Meriden Specifications. TV/videotape inspection of the main line will be required per City of Meriden Requirements.
10. Sanitary sewer manholes must pass a vacuum test per City of Meriden Specifications.

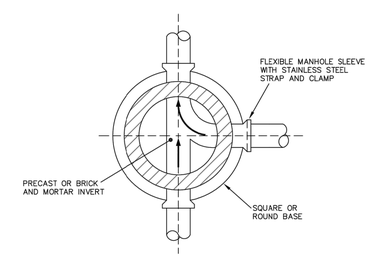

SECTION B–B

THE INFORMATION, INCLUDING ESTIMATED QUANTITIES OF WORK SHOWN ON THESE SHEETS IS BASED ON LIMITED INVESTIGATIONS BY THE TOWN AND IS IN NO WAY WARRANTED TO INDICATE THE TRUE CONDITIONS OR ACTUAL QUANTITIES OR DISTRIBUTION OF QUANTITIES OF WORK WHICH WILL BE REQUIRED.

NO.	DATE	DESCRIPTION

REVISIONS

SUPV.	K.O.E.
DESIGN	E.D.
DRAWN	N.S. / S.A.M.
CHECKED	J.A.W.
DATE	09/07/2021

WMC CONSULTING ENGINEERS

• WENGELL, McDONNELL & COSTELLO •
87 HOLMES ROAD
NEWINGTON, CT 06111
(860) 667-9624

PREPARED FOR
CITY OF MERIDEN
142 E MAIN STREET
MERIDEN, CT 06450

REPLACEMENT OF CEDAR STREET
BRIDGE OVER HARBOR BROOK
SANITARY SEWER DETAILS - 1

SIZE	PROJECT	FILE NAME	NUMBER	REV.	SHEET	OF
D –	CEDAR STREET –	F.D. –	17088 –		11	32

Top Hat Frame

Weight **120 lbs.**

EJ FOUNDRY PRODUCT
#00124811 OR APPROVED
EQUAL

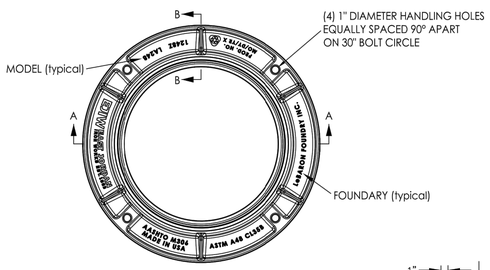

SECTION B - B

SECTION A - A

Wide Base Frame

Weight **295 lbs.**

EJ FOUNDRY PRODUCT
#00220515 OR APPROVED
EQUAL

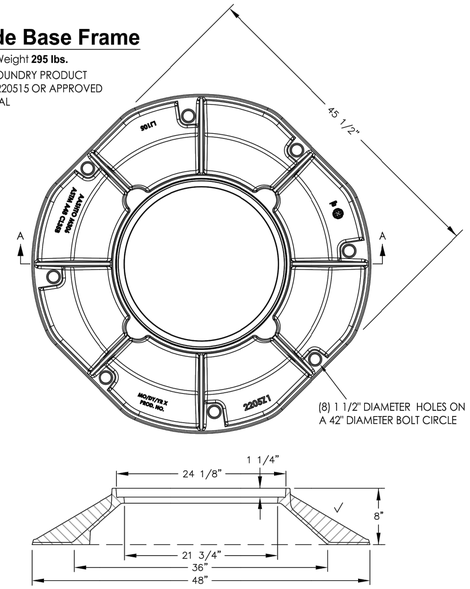

SECTION A-A

Cover

Weight 123

EJ FOUNDRY PRODUCT
#00124878 OR APPROVED
EQUAL

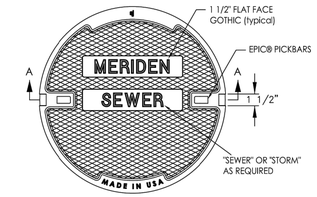

BOTTOM VIEW

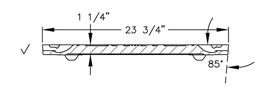

SECTION A-A

Top Hat Frame
Lockable / Watertight

Weight **120 lbs.**

EJ FOUNDRY PRODUCT
#00124813 OR APPROVED
EQUAL

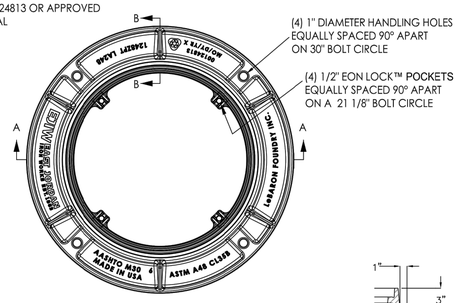

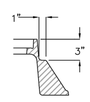

SECTION B - B

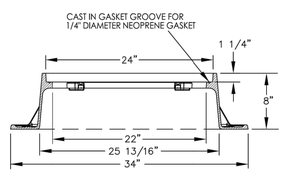

SECTION A-A

Wide Base Frame
Lockable / Watertight

Weight **295 lbs.**

EJ FOUNDRY PRODUCT
#00220517 OR APPROVED
EQUAL

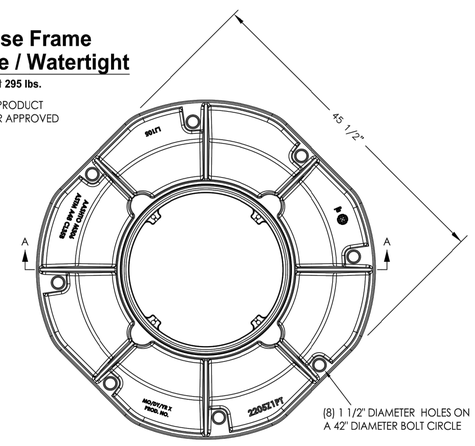

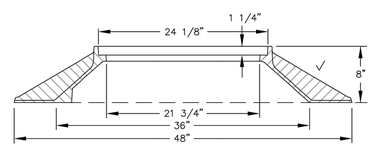

SECTION A-A

Cover
Lockable / Watertight

Weight 116

EJ FOUNDRY PRODUCT
#00124876 OR APPROVED
EQUAL

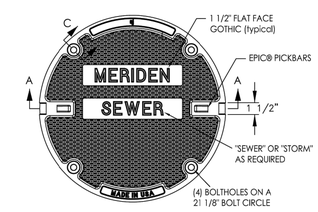

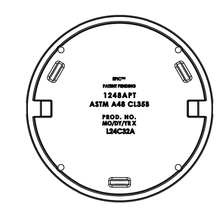

BOTTOM VIEW

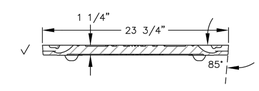

SECTION A-A

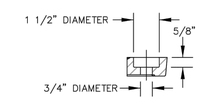

SECTION C-C

Design Features
-Materials
Gray Iron (CL.35B)
-Design Load
Heavy Duty
-Open Area

-Coating
Undipped
-√ Designates Machined Surface

Certification
-ASTM A48
-Country of Origin: USA

THE INFORMATION, INCLUDING ESTIMATED QUANTITIES OF WORK SHOWN ON THESE SHEETS IS BASED ON LIMITED INVESTIGATIONS BY THE TOWN AND IS IN NO WAY WARRANTED TO INDICATE THE TRUE CONDITIONS OR ACTUAL QUANTITIES OR DISTRIBUTION OF QUANTITIES OF WORK WHICH WILL BE REQUIRED.

NO.	DATE	DESCRIPTION

REVISIONS

SUPV.	K.O.E.
DESIGN	E.D.
DRAWN	N.S. / S.A.M.
CHECKED	J.A.W.
DATE	09/07/2021

WMC
CONSULTING ENGINEERS

• WENGELL, McDONNELL & COSTELLO •
87 HOLMES ROAD
NEWINGTON, CT 06111
(860) 667-9624

PREPARED FOR

CITY OF MERIDEN

142 E MAIN STREET

MERIDEN, CT 06450

REPLACEMENT OF CEDAR STREET
BRIDGE OVER HARBOR BROOK
SANITARY SEWER DETAILS - 2

SIZE	PROJECT	FILE NAME	NUMBER	REV.	SHEET	OF
D –	CEDAR STREET –	F.D. –	17088 –		12	32

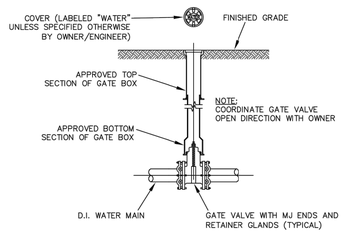

GATE VALVE
NOT TO SCALE

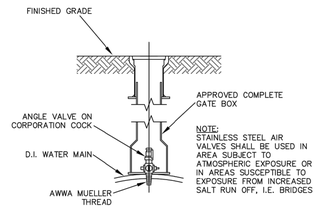

AIR VALVE
NOT TO SCALE

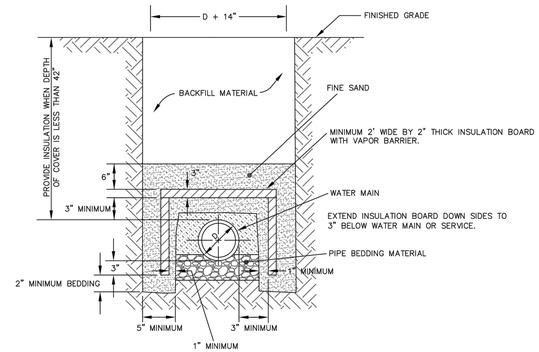

NOTES:

1. INSULATION BOARD TO BE FOAMGLAS OR APPROVED EQUAL MEETING ASTM C-552 WITH A COMPRESSIVE STRENGTH OF 90 PSI.
2. VAPOR BARRIER TO BE PITTCOTE 300 OR APPROVED EQUAL.
3. BACKFILL MATERIAL AROUND INSULATION MUST BE FINE SAND FREE FROM ROOTS, ORGANIC MATTER, OR OTHER INJURIOUS MATERIALS.
4. MAINTAIN 3" MINIMUM CLEARANCE FROM WATER MAIN ON ALL SIDES.
5. FOR REDUCTION IN COVER ONLY WHERE RESULTANT COVER IS LESS THAN 42".

WATER MAIN TRENCH
INSULATION DETAIL
NOT TO SCALE

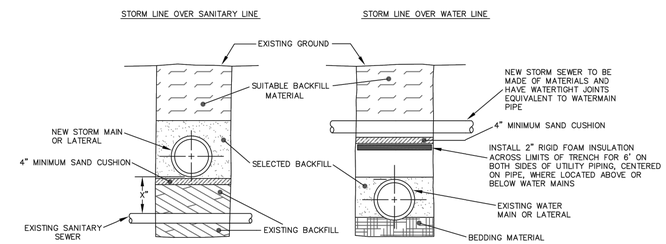

EXISTING SANITARY LINE

1. IF "X" IS 4" TO 18", REPLACE SANITARY SEWER WITH 18' LONG D.I.P.
2. IF "X" IS 18" TO 36", LINE SANITARY SEWER FROM MANHOLE TO MANHOLE

EXISTING WATER LINE

1. FOR SEPARATION OF WATER AND STORM SEWER BETWEEN 4" AND 18"
2. 2" INSULATION LAYER TO BE INSTALLED BETWEEN WATER MAIN AND ALL PROPOSED SANITARY AND STORM SEWERS WHERE VERTICAL SEPARATION IS LESS THAN 18"
3. INSULATION DIMENSIONS EQUAL TO NEW TRENCH WIDTH BY EXISTING WATER MAIN O.D. PLUS 4'

- NEW JOINTS TO BE CENTERED EQUIDISTANT FROM WATER MAIN
- PIPE JOINT REPAIR CLAMPS OR EQUIVALENT TO BE USED ON ALL NEW MAINS AND LATERALS

STORM LINE CONFLICTS
NOT TO SCALE

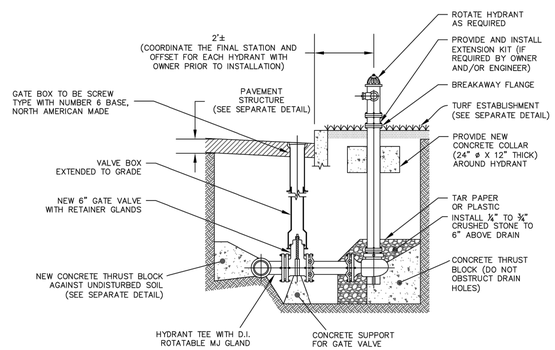

HYDRANT ASSEMBLY
NOT TO SCALE

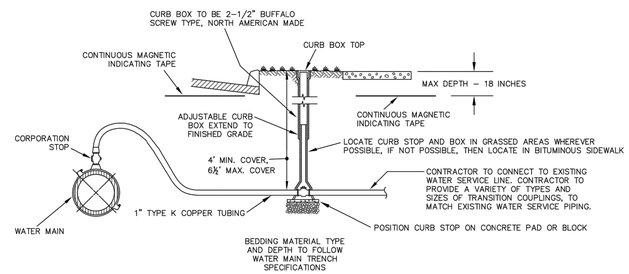

TYPICAL 1" WATER SERVICE CONNECTION
NOT TO SCALE

NOTE;
CITY OF MERIDEN TO CONNECT ALL SERVICE TAPS, AND PROVIDE CORPORATION STOP AND SWING.

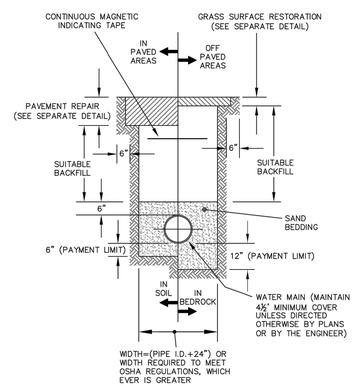

WATER MAIN TRENCH
NOT TO SCALE

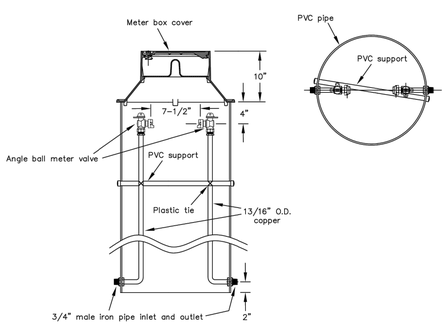

METER PIT DETAIL
NOT TO SCALE

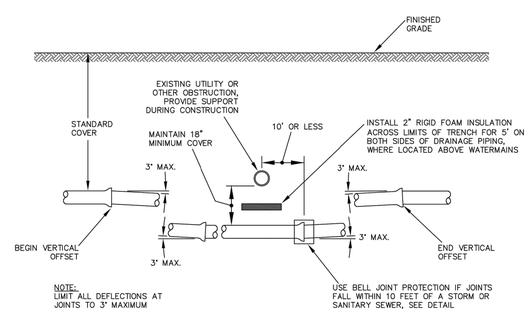

GRADUAL VERTICAL OFFSET
NOT TO SCALE

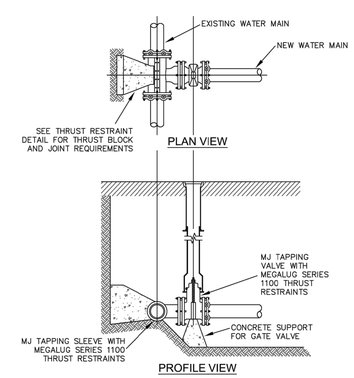

TAPPING SLEEVE & VALVE
NOT TO SCALE

THE INFORMATION, INCLUDING ESTIMATED QUANTITIES OF WORK SHOWN ON THESE SHEETS IS BASED ON LIMITED INVESTIGATIONS BY THE TOWN AND IS IN NO WAY WARRANTED TO INDICATE THE TRUE CONDITIONS OR ACTUAL QUANTITIES OR DISTRIBUTION OF QUANTITIES OF WORK WHICH WILL BE REQUIRED.

NO.	DATE	DESCRIPTION

REVISIONS

SUPV.	K.O.E.
DESIGN	E.D.
DRAWN	N.S. / S.A.M.
CHECKED	J.A.W.
DATE	09/07/2021

WMC CONSULTING ENGINEERS

• WENGELL, McDONNELL & COSTELLO •
87 HOLMES ROAD
NEWINGTON, CT 06111
(860) 667-9624

PREPARED FOR

CITY OF MERIDEN
142 E MAIN STREET
MERIDEN, CT 06450

REPLACEMENT OF CEDAR STREET BRIDGE OVER HARBOR BROOK
WATER DETAILS - 1

SIZE	PROJECT	FILE NAME	NUMBER	REV.	SHEET	OF
D –	CEDAR STREET –	F.D. –	17088 –		13	32

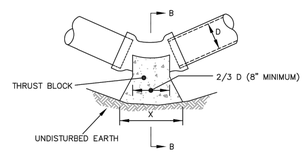

PLAN

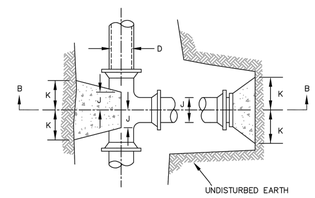

PLAN

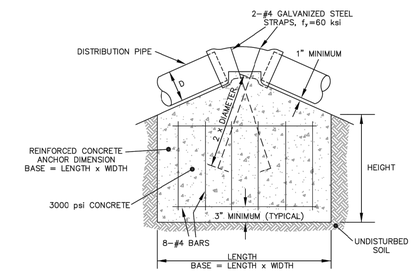

TYPICAL CONCRETE ANCHOR
NOT TO SCALE

BEND		45°			22½°
PIPE DIAMETER (D) IN INCHES		12	8	6	12
VOLUME OF CONCRETE REQUIRED (CF)		157	74	43	81
TYPICAL DIMENSIONS IN FEET	LENGTH	6.33	5	4	5.25
	WIDTH	6.33	5	4	5.25
	HEIGHT	4	3	3	3

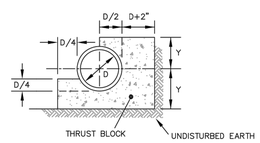

SECTION A-A

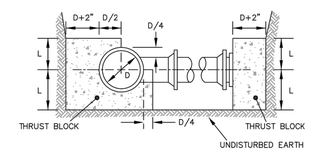

SECTION B-B

1. ALL CONCRETE SHALL BE 3000 psi @ 28 DAYS.
2. DIMENSIONS SHOWN ARE MINIMUM AND ARE BASED UPON SOIL PRESSURE OF 2000 psf AND STATIC WATER PRESSURE OF 200 psi.
3. THRUST BLOCKS SHALL BEAR AGAINST UNDISTURBED EARTH.

TABLE OF DIMENSIONS																				
DIMENSION	90° BEND					45° BEND					22½° BEND					11¼° BEND				
D (in)	6	8	10	12	16	6	8	10	12	16	6	8	10	12	16	6	8	10	12	16
X (in)	26	37	42	54	70	18	26	34	38	51	21	19	24	28	38	9	14	16	20	28
Y (in)	15	18	24	26	35	12	14	16	20	26	10	10	12	14	18	6	7	9	10	12

WATER MAIN BEND CONCRETE THRUST BLOCK DETAIL
NOT TO SCALE

1. ALL CONCRETE SHALL BE 3000 psi @ 28 DAYS.
2. DIMENSIONS SHOWN ARE MINIMUM AND ARE BASED UPON SOIL PRESSURE OF 2000 psf AND STATIC WATER PRESSURE OF 200 psi.
3. THRUST BLOCKS SHALL BEAR AGAINST UNDISTURBED EARTH.

TABLE OF DIMENSIONS					
B (in)	6	8	10	12	16
J (in)	6	7	9	10	12
K (in)	12	15	20	24	30
L (in)	12	16	18	22	30

WATER MAIN TEE / PLUG CONCRETE THRUST BLOCK
NOT TO SCALE

THE INFORMATION, INCLUDING ESTIMATED QUANTITIES OF WORK SHOWN ON THESE SHEETS IS BASED ON LIMITED INVESTIGATIONS BY THE TOWN AND IS IN NO WAY WARRANTED TO INDICATE THE TRUE CONDITIONS OR ACTUAL QUANTITIES OR DISTRIBUTION OF QUANTITIES OF WORK WHICH WILL BE REQUIRED.

NO.	DATE	DESCRIPTION

REVISIONS

SUPV.	K.O.E.
DESIGN	E.D.
DRAWN	N.S. / S.A.M.
CHECKED	J.A.W.
DATE	09/07/2021

WMC CONSULTING ENGINEERS

• WENGELL, McDONNELL & COSTELLO •
87 HOLMES ROAD
NEWINGTON, CT 06111
(860) 667-9624

PREPARED FOR

CITY OF MERIDEN
142 E MAIN STREET
MERIDEN, CT 06450

REPLACEMENT OF CEDAR STREET
BRIDGE OVER HARBOR BROOK
WATER DETAILS - 2

SIZE	PROJECT	FILE NAME	NUMBER	REV.	SHEET	OF
D –	CEDAR STREET –	F.D. –	17088 –		14	32

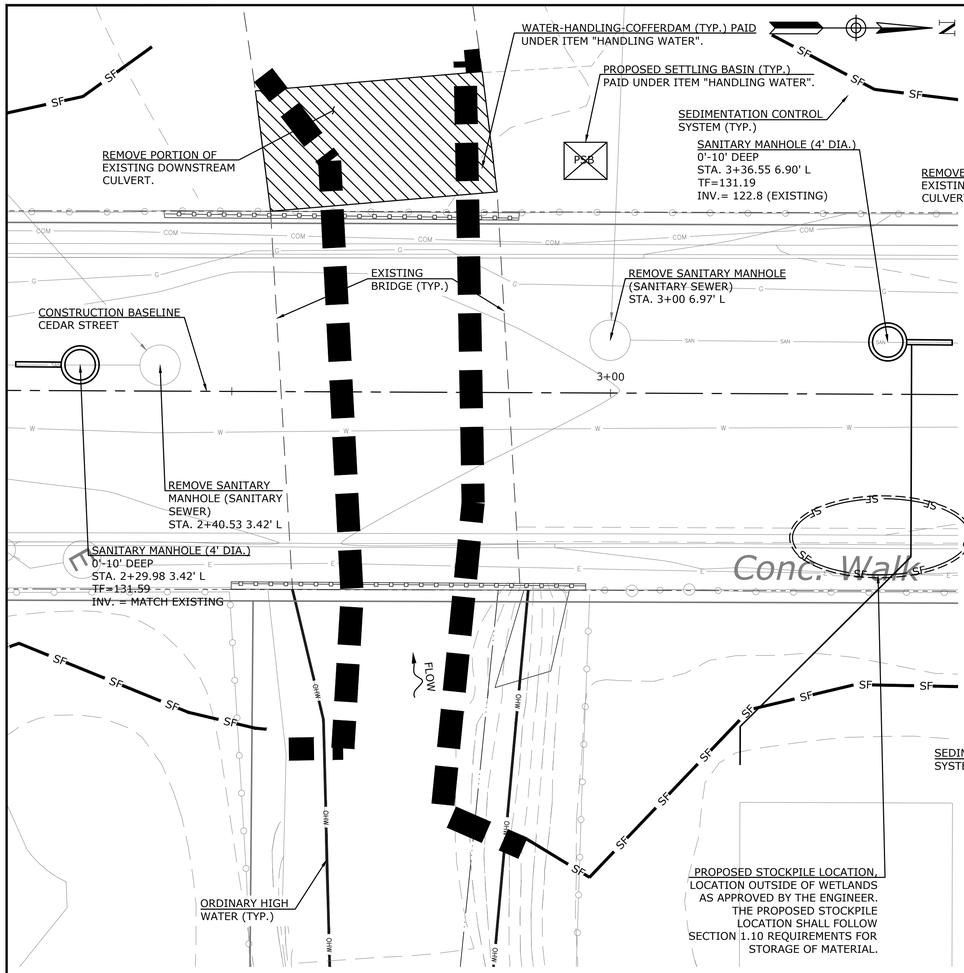

STAGE 1 PLAN

SCALE: 1" = 10'-0"

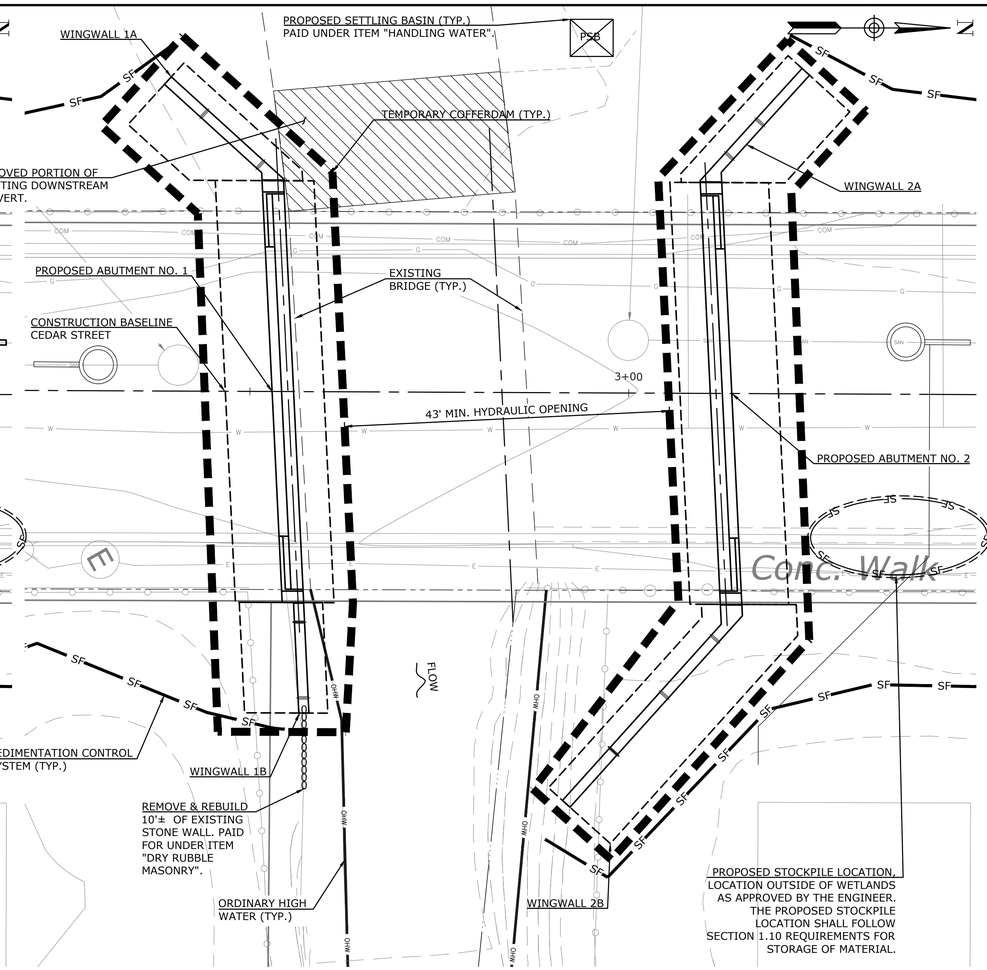

STAGE 2 PLAN

SCALE: 1" = 10'-0"

TEMPORARY FACILITIES HYDRAULICS

AVERAGE DAILY FLOW	16 CFS
AVERAGE SPRING FLOW	32 CFS
2 - YEAR FREQUENCY DISCHARGE	716 CFS
TEMPORARY DESIGN DISCHARGE	716 CFS
TEMPORARY DESIGN FREQUENCY	2-YR
TEMPORARY WATER SURFACE ELEVATION UPSTREAM	125.19
TEMPORARY WATER SURFACE ELEVATION DOWNSTREAM	124.41

TIME RESTRICTIONS:
UNCONFINED IN-STREAM: UNCONFINED IN-STREAM ACTIVITIES MUST BE LIMITED TO THE TIME PERIOD JUNE 1 THROUGH SEPTEMBER 30.

WATER HANDLING NOTES:
1. THE CONTRACTOR SHALL MAINTAIN WATER THROUGH BRIDGE 04841 USING WATER-HANDLING COFFERDAMS AS SHOWN DURING CONSTRUCTION DURING STAGE 1.
2. THE CONTRACTOR SHALL MAINTAIN WATER THROUGH BRIDGE 04841 USING TEMORARY COFFERDAMS AS SHOWN DURING CONSTRUCTION DURING STAGE 2.
3. EQUIPMENT SHALL NOT BE PERMITTED IN THE STREAM WHEN TEMPORARY COFFERDAMS OR WATER-HANDLING-COFFERDAMS ARE NOT IN PLACE WITHOUT THE APPROVAL OF THE ENGINEER.
4. PRIOR TO ANY DEWATERING, THE CONTRACTOR MUST SUBMIT TO THE ENGINEER A WRITTEN PROPOSAL FOR SPECIFIC METHODS AND DEVICES TO BE USED AND MUST OBTAIN THE ENGINEER'S WRITTEN APPROVAL OF SUCH METHODS AND DEVICES.
5. A DEWATERING BASIN SHALL BE ESTABLISHED OUTSIDE OF THE WETLAND LIMITS. THE LOCATION OF THE GROUNDWATER TREATMENT FACILITY IS APPROXIMATE. THE EXACT POSITION MAY VARY BASED ON THE PUMPING DESIGN SUBMISSION, DISCHARGE REQUIREMENTS AND APPROVED BY THE ENGINEER. DEWATERING BASIN SHALL BE PAID UNDER ITEM "HANDLING WATER" OR "TEMPORARY COFFERDAMS", AS APPLICABLE.
6. TEMPORARY COFFERDAMS AND WATER-HANDLING-COFFERDAMS SHALL CONSIST OF ANY APPROVED SYSTEM THAT THE CONTRACTOR ELECTS TO USE WHICH WILL SAFELY PROTECT THE CONSTRUCTION AREA FROM THE TEMPORARY DESIGN DISCHARGE ELEVATION, SHALL BE ABLE TO SUPPORT CONSTRUCTION ACTIVITY AND EXCAVATION, AND SHALL CONFORM TO PERMITS.

SUGGESTED CONSTRUCTION SEQUENCE NOTES:

STAGE 1:
1. INSTALL NECESSARY EROSION AND SEDIMENTATION CONTROLS AS SHOWN ON THE PLAN THROUGHOUT THE DURATION OF THE PROJECT, IN ACCORDANCE WITH THE CONTRACTOR'S APPROVED PLAN OR AS DIRECTED BY THE ENGINEER.
2. PERFORM NECESSARY CLEARING AND GRUBBING.
3. COORDINATE RELOCATION OF EXISTING UTILITIES.
4. INSTALL T.P.C.B.C. AND CLOSE CEDAR STREET TO TRAFFIC.
5. INSTALL WATER-HANDLING-COFFERDAMS AS SHOWN AND MAINTAIN FLOW THROUGH BRIDGE 04841. THE TOP OF WATER-HANDLING COFFERDAMS SHALL BE ELEVATION (124.5') WHICH WILL PROVIDE PROTECTION FOR THE COMPUTED AVERAGE SPRING FLOW CONDITION.
6. INSTALL DEWATERING BASIN. EFFLUENT FROM DEWATERED WORK AREA(S) SHOULD NOT BE DISCHARGED DIRECTLY TO THE STREAM BUT MUST BE PROCESSED THROUGH A DEWATERING BASIN. TO BE PAID FOR UNDER ITEM "HANDLING WATER". SUCH FACILITIES SHOULD NOT BE LOCATED WITHIN THE STREAM CHANNEL OR ADJACENT WETLANDS. SEE WATER HANDLING NOTES.
7. MAINTAIN EXISTING DRAINAGE. ANY STORM DRAINAGE DISCHARGING INTO A CONFINED WORK AREA FROM EXISTING OR PROPOSED STORM DRAINAGE SHALL BE DIVERTED OR PUMPED OUTSIDE THE CONFINED AREAS. THE CONTRACTOR SHALL SUBMIT THE MEANS AND METHODS OF HANDLING STORM DRAINAGE TO THE ENGINEER FOR APPROVAL. WORK PAID UNDER "HANDLING WATER."
8. REMOVE EXISTING BRIDGE, WINGWALLS, ASSOCIATED FOOTINGS AND APPROXIMATELY 16 FEET OF DOWNSTREAM CULVERT AS SHOWN, PROTECTING THE BROOK FROM FALLING DEBRIS DURING THE REMOVAL. A DEBRIS SHIELD SHALL BE USED AND INSTALLED ABOVE ELEVATION 126.5'.
9. THE DOWNSTREAM CULVERT SHALL BE REMOVED WHERE IN CONFLICT WITH THE PROPOSED BRIDGE OR TO 1 FOOT BELOW THE STREAMBED.
10. GRADE NORTHERLY CHANNEL AS NECESSARY.
11. RECONFIGURE WATER-HANDLING COFFERDAMS AS NECESSARY TO COMPLETE CHANNEL GRADING.
12. REMOVE WATER-HANDLING COFFERDAMS.
13. INSTALL THE PROPOSED SANITARY MANHOLES AS SHOWN.

SUGGESTED CONSTRUCTION SEQUENCE NOTES:

STAGE 2:
1. MAINTAIN NECESSARY EROSION AND SEDIMENTATION CONTROLS.
2. INSTALL TEMPORARY COFFERDAMS. THE MINIMUM HYDRAULIC CLEAR OPENING BETWEEN THE COFFERDAMS SHALL BE (43'), NORMAL TO THE ALIGNMENT OF THE COFFERDAMS. THE TOP OF COFFERDAMS SHALL BE ELEVATION (126.19') UPSTREAM AND (125.41') DOWNSTREAM WHICH WILL PROVIDE PROTECTION FOR THE COMPUTED 2-YEAR TEMPORARY CONDITION FLOOD LEVEL WITH 1 FOOT FREEBOARD.
3. INSTALL DEWATERING BASIN. EFFLUENT FROM DEWATERED WORK AREA(S) SHOULD NOT BE DISCHARGED DIRECTLY TO THE STREAM BUT MUST BE PROCESSED THROUGH A DEWATERING BASIN. TO BE PAID FOR UNDER ITEM "HANDLING WATER". SUCH FACILITIES SHOULD NOT BE LOCATED WITHIN THE STREAM CHANNEL OR ADJACENT WETLANDS. SEE WATER HANDLING NOTES.
4. MAINTAIN EXISTING DRAINAGE. ANY STORM DRAINAGE DISCHARGING INTO A CONFINED WORK AREA FROM EXISTING OR PROPOSED STORM DRAINAGE SHALL BE DIVERTED OR PUMPED OUTSIDE THE CONFINED AREAS. THE CONTRACTOR SHALL SUBMIT THE MEANS AND METHODS OF HANDLING STORM DRAINAGE TO THE ENGINEER FOR APPROVAL. WORK PAID UNDER "HANDLING WATER."
5. INSTALL NEW ABUTMENTS AND WINGWALLS.
6. REBUILD PORTION OF THE EXISTING STONEWALL.
7. PERFORM CHANNEL GRADING AND INSTALL RIPRAP EMBANKMENT PROTECTION AND NATURAL STREAMBED MATERIAL.
8. COMPLETE EMBANKMENT GRADING, DRAINAGE AND PREFORMED SCOUR HOLE.
9. REMOVE ALL TEMPORARY COFFERDAMS.
10. COMPLETE REMAINING BRIDGE, UTILITY AND ROADWAY WORK.
11. THE SEDIMENTATION CONTROL SYSTEM IS TO BE REMOVED AFTER THE IMPACTED AREAS ARE STABILIZED AND VEGETATION HAS BEEN ESTABLISHED.

THE INFORMATION, INCLUDING ESTIMATED QUANTITIES OF WORK SHOWN ON THESE SHEETS IS BASED ON LIMITED INVESTIGATIONS BY THE TOWN AND IS IN NO WAY WARRANTED TO INDICATE THE TRUE CONDITIONS OR ACTUAL QUANTITIES OR DISTRIBUTION OF QUANTITIES OF WORK WHICH WILL BE REQUIRED.

NO.	DATE	DESCRIPTION

REVISIONS

SUPV.	K.O.E.
DESIGN	E.D.
DRAWN	N.S. / S.A.M.
CHECKED	J.A.W.
DATE	09/07/2021

WMC CONSULTING ENGINEERS
• WENGELL, McDONNELL & COSTELLO •
87 HOLMES ROAD
NEWINGTON, CT 06111
(860) 667-9624

PREPARED FOR
CITY OF MERIDEN
142 E MAIN STREET
MERIDEN, CT 06450

REPLACEMENT OF CEDAR STREET BRIDGE OVER HARBOR BROOK STAGING PLAN

SIZE	PROJECT	FILE NAME	NUMBER	REV.	SHEET / OF
D	CEDAR STREET	F.D.	17088		15 / 32

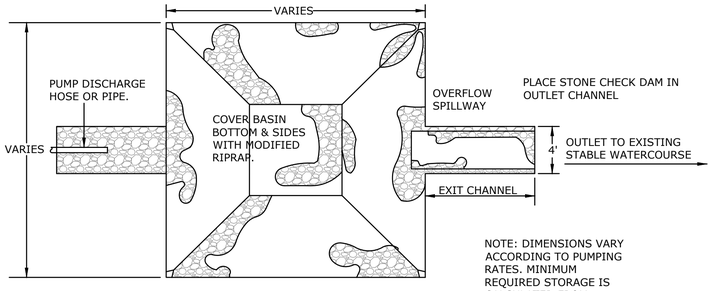

PLAN VIEW

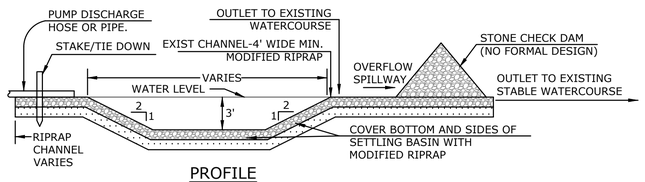

PROFILE

REFER TO PAGE 5-13-7 "CONNECTICUT GUIDELINES FOR SOIL EROSION AND SEDIMENTATION CONTROL".

TYPE III PUMPING SETTLING BASIN

N.T.S.

PUMPING SETTLING BASIN NOTES:
1. LOCATION AS DIRECTED BY ENGINEER. REMOVE WHEN PUMPING IS COMPLETED.
2. PUMP DISCHARGE PAD HALL NOT BE PAID FOR SEPARATELY, BUT SHALL BE INCLUDED IN THE COST THE GENERAL WORK.
3. STORAGE VOLUME BASED UPON PUMP DISCHARGE, LARGER PAD DIMENSIONS MAY BE REQUIRED AS DIRECTED BY THE ENGINEER. (MINIMUM REQUIRED STORAGE, CUBIC FEET) = 16 x (PUMP DISCHARGE RATE, GPM)
4. TYPE II PUMPING SETTLING BASIN TO BE USED WHEN THE EXPECTED DURATION OF USE IS LESS THAN 3 MONTHS. TYPE III PUMPING SETTLING BASIN TO BE USED WHEN THE EXPECTED DURATION OF USE IS LONGER THAN 3 MONTHS.
5. SETTLING BASIN AND EXIT CHANNEL TO BE BACKFILLED AT COMPLETION OF WORK. AREA SHALL BE GRADED AND STABILIZED ACCORDING TO PLANS OR AS DIRECTED BY THE ENGINEER.

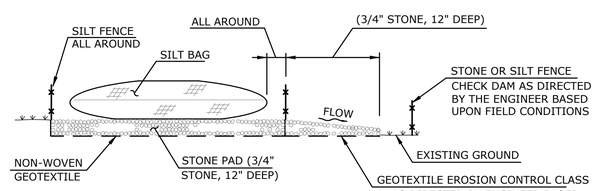

SECTION

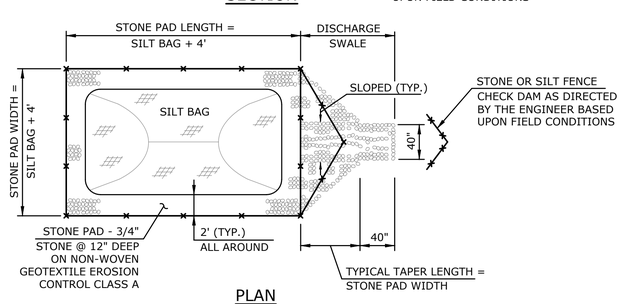

PLAN

SILT BAG INSTALLATION

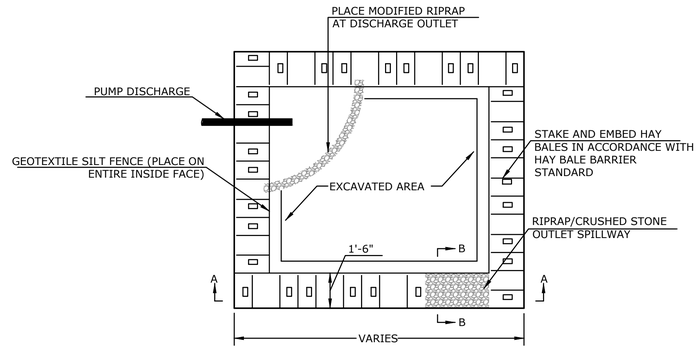

PLAN

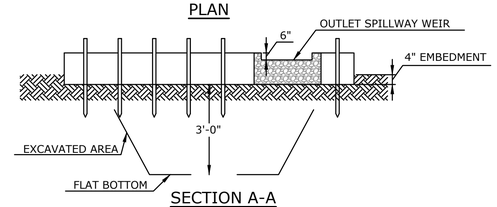

SECTION A-A

NOTE: DIMENSIONS VARY ACCORDING TO PUMPING RATES. MINIMUM REQUIRED STORAGE IS CALCULATED FROM CREST OF SPILLWAY WEIR.

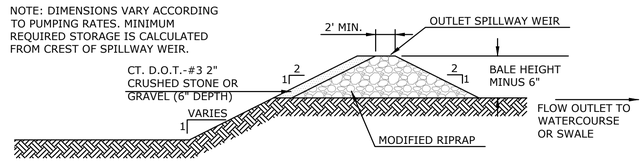

SECTION B-B

REFER TO PAGE 5-13-7 "CONNECTICUT GUIDELINES FOR SOIL EROSION AND SEDIMENTATION CONTROL".

TYPE II PUMPING SETTLING BASIN

N.T.S.

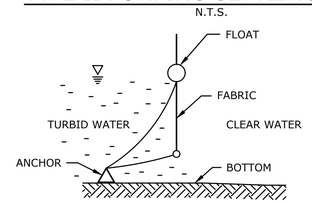

FLOATING SECTION

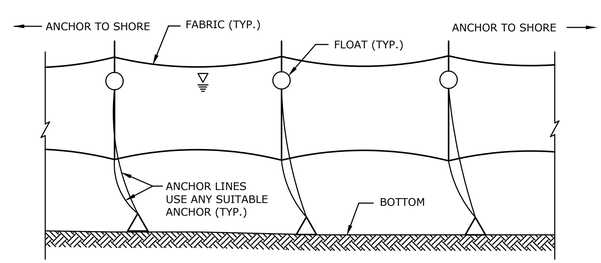

TURBIDITY CONTROL CURTAINS

NOT TO SCALE

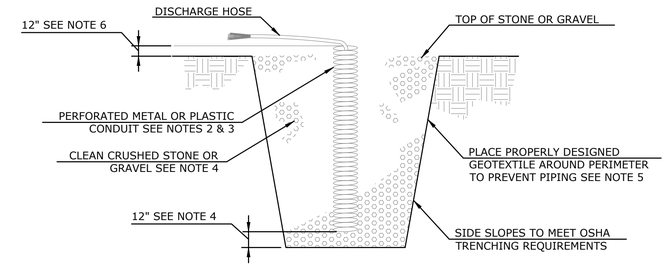

REFER TO PAGE 5-13-3 "CONNECTICUT GUIDELINES FOR SOIL EROSION AND SEDIMENTATION CONTROL".

NOTE:
1. OVERALL SUMP PIT DIMENSIONS SHALL BE COMPATIBLE WITH ANTICIPATED SEEPAGE RATES AND PUMP SIZE TO BE USED.
2. THE STANDPIPE DIAMETER AND NUMBER OF PERFORATIONS SHALL BE COMPATIBLE WITH THE PUMP SIZE BEING USED.
3. PERFORATIONS IN THE STANDPIPE SHALL BE EITHER CIRCULAR OR SLOTS. PERFORATION SIZE SHALL NOT EXCEED 1/2" IN DIAMETER.
4. CRUSHED STONE OR GRAVEL SHALL BE NO SMALLER THAN CT DOT #8 SIZE NOR LARGER THAN CT DOT #3 SIZE. CRUSHED STONE SHALL EXTEND A MINIMUM OF 12" BELOW THE BOTTOM OF THE STANDPIPE.
5. IF EXCESSIVE MOVEMENT OF FINE SOIL PARTICLES FROM THE SURROUNDING EXISTING SOILS IS ANTICIPATED, A PROPERLY DESIGNED GEOTEXTILE SHALL BE PLACED BETWEEN THE EXISTING SOILS AND THE CRUSHED STONE OR GRAVEL BACKFILL.
6. THE STANDPIPE SHALL EXTEND A MINIMUM OF 12" ABOVE THE SURROUNDING GROUND.

PUMP INTAKE

TYPICAL SECTION OF SUMP PIT

N.T.S.

GENERAL
EFFLUENT FROM DEWATERED WORK AREA(S) SHOULD NOT BE DISCHARGED DIRECTLY TO THE BROOK BUT BE PROCESSED THROUGH TREATMENT STRUCTURE(S). SUCH STRUCTURES SHOULD NOT BE LOCATED WITHIN THE STREAM CHANNEL OR ADJACENT WETLANDS.

THE PROJECT SHOULD NOT BE CONDUCTED IN A MANNER WHICH IMPEDES STREAM FLOW.

COFFERDAM NOTES
1. A CONSTRUCTION SEQUENCING PLAN AND A WATER HANDLING PLAN INCLUDING A CONTINGENCY PLAN FOR FLOOD EVENTS MUST BE SUBMITTED IN WRITING TO THE ENGINEER AND APPROVED BY THE ENGINEER PRIOR TO THE COMMENCEMENT OF ANY CONSTRUCTION IN A WATERWAY.

2. TEMPORARY COFFERDAM AND PUMPING NOT PAID SEPARATELY. COST TO BE INCLUDED IN THE PAY ITEM "COFFERDAM AND DEWATERING".

3. WATER HANDLING PLAN IS EXAMPLE ONLY.

THE INFORMATION, INCLUDING ESTIMATED QUANTITIES OF WORK SHOWN ON THESE SHEETS IS BASED ON LIMITED INVESTIGATIONS BY THE TOWN AND IS IN NO WAY WARRANTED TO INDICATE THE TRUE CONDITIONS OR ACTUAL QUANTITIES OR DISTRIBUTION OF QUANTITIES OF WORK WHICH WILL BE REQUIRED.

NO.	DATE	DESCRIPTION

REVISIONS

SUPV.	K.O.E.
DESIGN	E.D.
DRAWN	N.S. / S.A.M.
CHECKED	J.A.W.
DATE	09/07/2021

WMC CONSULTING ENGINEERS
• WENGELL, McDONNELL & COSTELLO •
87 HOLMES ROAD
NEWINGTON, CT 06111
(860) 667-9624

PREPARED FOR
CITY OF MERIDEN
142 E MAIN STREET
MERIDEN, CT 06450

REPLACEMENT OF CEDAR STREET BRIDGE OVER HARBOR BROOK
HANDLING WATER DETAILS

SIZE	PROJECT	FILE NAME	NUMBER	REV.	SHEET	OF
D –	CEDAR STREET –	F.D. –	17088 –		16	32

1. SET POSTS AND EXCAVATE A 6"x6" TRENCH. SET POSTS DOWN SLOPE. ANGLE 10° UPSLOPE FOR STABILITY AND SELF CLEANING.

2. ATTACH THE WIRE MESH FENCING TO POST.

3. ATTACH GEOTEXTILE TO THE WIRE FENCING AND EXTEND IT TO THE TRENCH.

4. BACKFILL THE TRENCH AND COMPACT THE EXCAVATED SOIL.

* WHEN INSTALLATION OF TRENCH IS IMPRACTICAL, ALTERNATE INSTALLATION SHALL BE TO LAY 6" FLAP HORIZONTALLY ON GROUND AND BURY FLAP BY RAMP SOIL OR STONE UP TO CONTROL FENCE. DEPTH OF RAMP SHALL BE AS REQUIRED TO HOLD DOWN FLAP WITHOUT LEAKAGE UNDER CONTROL FENCE WHILE MAINTAINING MINIMUM HEIGHT.

GEOTEXTILE FENCE SYSTEM

REFER TO PAGE 5-11-35 "CONNECTICUT GUIDELINES FOR SOIL EROSION AND SEDIMENTATION CONTROL" AND PAGE 55 "ON-SITE MITIGATION FOR CONSTRUCTION ACTIVITIES".

SEDIMENTATION CONTROL SYSTEM INSTALLATION

N.T.S.

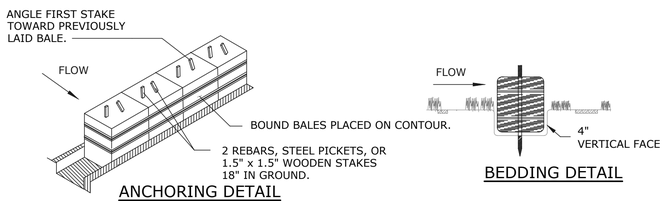

ANCHORING DETAIL

BEDDING DETAIL

HAY BALE CONSTRUCTION SPECIFICATIONS:

1. HAY BALES SHALL BE PLACED AROUND NEWLY INSTALLED CATCH BASINS IN SAGS AND DROP INLETS TO PREVENT SEDIMENTATION AND OTHER DEBRIS FROM ACCUMULATING ON THE GRATE OR IN THE SUMP. HAY BALES SHOULD BE KEPT CLEAN AND FREE OF DEBRIS TO FACILITATE FLOW.
2. EACH BALE SHALL BE EMBEDDED IN THE SOIL A MINIMUM OF 4", AND PLACED SO THE BINDINGS ARE HORIZONTAL.
3. BALES SHALL BE SECURELY ANCHORED IN PLACE BY EITHER TWO STAKES OR REBARS DRIVEN THROUGH THE BALE. THE FIRST STAKE SHALL BE DRIVEN TOWARD THE PREVIOUSLY LAID BALE AT AN ANGLE TO FORCE THE BALES TOGETHER. STAKES SHALL BE DRIVEN FLUSH WITH THE BALE.
4. INSPECTION SHALL BE FREQUENT AND REPAIR REPLACEMENT SHALL BE MADE PROMPTLY AS NEEDED.
5. BALES SHALL BE REMOVED WHEN THEY HAVE SERVED THEIR USEFULNESS SO AS NOT TO BLOCK OR IMPEDE STORM FLOW OR DRAINAGE.

REFER TO PAGE 5-11-30 "CONNECTICUT GUIDELINES FOR SOIL EROSION AND SEDIMENTATION CONTROL" AND PAGE 53 "ON-SITE MITIGATION FOR CONSTRUCTION ACTIVITIES".

HAY BALE DETAIL

N.T.S.

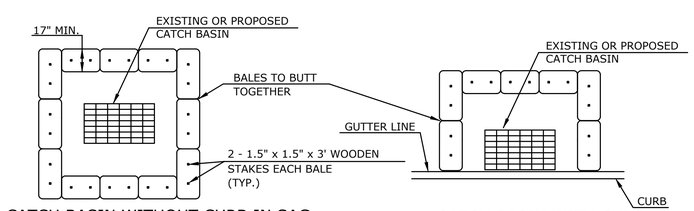

CATCH BASIN WITHOUT CURB IN SAG

CATCH BASIN WITH CURB

REFER TO PAGE 5-11-33 "CONNECTICUT GUIDELINES FOR SOIL EROSION AND SEDIMENTATION CONTROL" AND PAGE 40 "ON-SITE MITIGATION FOR CONSTRUCTION ACTIVITIES".

SEDIMENTATION CONTROL DETAILS

N.T.S.

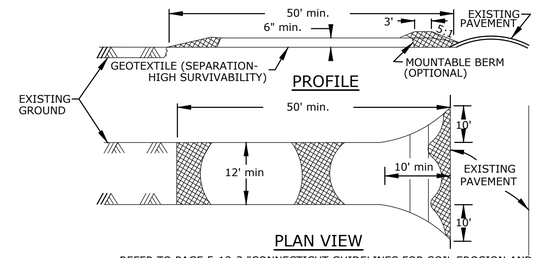

PROFILE

PLAN VIEW

REFER TO PAGE 5-12-2 "CONNECTICUT GUIDELINES FOR SOIL EROSION AND SEDIMENTATION CONTROL" AND PAGE 50 "ON-SITE MITIGATION FOR CONSTRUCTION ACTIVITIES".

CONSTRUCTION SPECIFICATION:

1. STONE SIZE - USE 2" STONE, OR RECLAIMED OR RECYCLED CONCRETE EQUIVALENT.
2. LENGTH - AS REQUIRED, BUT NOT LESS THAN 50 FT (EXCEPT ON A SINGLE RESIDENCE LOT WHERE A 30' MINIMUM LENGTH WOULD APPLY).
3. THICKNESS - NOT LESS THAN 6".
4. WIDTH - 12' MINIMUM, BUT NOT LESS THAN THE FULL WIDTH AT POINTS WHERE INGRESS OR EGRESS OCCURS.
5. GEOTEXTILE - WILL BE PLACED OVER THE ENTIRE AREA PRIOR TO PLACING OF STONE. GEOTEXTILE WILL NOT BE REQUIRED ON A SINGLE FAMILY RESIDENCE LOT.
6. SURFACE WATER - ALL SURFACE WATER FLOWING OR DIVERTED TOWARD CONSTRUCTION ENTRANCES SHALL BE PIPED ACROSS THE ENTRANCE. IF PIPING IS IMPRACTICAL, A MOUNTABLE BERM WITH 5:1 SLOPES WILL BE PERMITTED.
7. MAINTENANCE - THE ENTRANCE SHALL BE MAINTAINED IN A CONDITION WHICH WILL PREVENT TRACKING OR FLOWING OF SEDIMENT ONTO PUBLIC RIGHT-OF-WAYS. THIS MAY REQUIRE PERIODIC TOP DRESSING WITH ADDITIONAL STONE AS CONDITIONS DEMAND AND REPAIR AND/OR CLEANOUT OF ANY MEASURES USED TO TRAP SEDIMENT. ALL SEDIMENT SPILLED, DROPPED, WASHED OR TRACKED ONTO PUBLIC RIGHT-OF-WAYS MUST BE REMOVED IMMEDIATELY.
8. WASHING - WHEELS SHALL BE CLEANED TO REMOVE SEDIMENT PRIOR TO ENTRANCE ONTO PUBLIC RIGHT-OF-WAY. WHEN WASHING IS REQUIRED, IT SHALL BE DONE ON AN AREA STABILIZED WITH STONE AND WHICH DRAINS INTO AN APPROVED SETTLING AREA SIZED TO HOLD THE VOLUME OF WATER USED DURING ANY 2-HOUR PERIOD.
9. PERIODIC INSPECTION AND NECESSARY MAINTENANCE SHALL BE PROVIDED AFTER EACH RAINFALL.
10. THE COST OF CONSTRUCTING THE STABILIZED CONSTRUCTION ENTRANCE WILL NOT BE PAID FOR SEPARATELY, BUT SHALL BE INCLUDED IN THE COST OF THE GENERAL WORK.

STABILIZED CONSTRUCTION ENTRANCE

N.T.S.

GENERAL
THIS PLAN PROPOSES EROSION CONTROL MEASURES TO HELP CONTROL ACCELERATED EROSION AND SEDIMENTATION AND REDUCE THE DANGER FROM STORM WATER RUNOFF AT THE SITE. THE RUNOFF SHALL BE CONTROLLED BY THE INTERCEPTION, DIVERSION, AND SAFE DISPOSAL OF PRECIPITATION. RUNOFF SHALL ALSO BE CONTROLLED BY STAGING CONSTRUCTION ACTIVITY AND PRESERVING NATURAL VEGETATION WHENEVER POSSIBLE. EXISTING VEGETATION SHALL BE PROTECTED AND ONLY THAT CLEARING AND GRUBBING ABSOLUTELY NECESSARY FOR THE PROPOSED CONSTRUCTION SHALL BE PERFORMED. ALL DISTURBED AREAS SHALL BE RESTORED TO THEIR ORIGINAL CONDITION AND CONTOUR, UNLESS OTHERWISE INDICATED ON THE PLANS. THE CONTRACTOR SHALL TAKE SPECIAL CARE WITH HIS CONSTRUCTION METHODS AND SHALL COMPLY WITH THE FOLLOWING GUIDELINES. REFERENCE IS MADE TO THE "CONNECTICUT GUIDELINES FOR SOIL EROSION AND SEDIMENTATION CONTROL" (2002), AS AMENDED. THE GUIDELINES ARE OBTAINABLE FROM THE CONNECTICUT DEPARTMENT OF ENERGY AND ENVIRONMENTAL PROTECTION, 79 ELM STREET, HARTFORD, CONNECTICUT 06106, AND SHOULD BE USED AS A REFERENCE IN CONSTRUCTING THE EROSION AND SEDIMENTATION CONTROLS INDICATED ON THESE PLANS. AN ADDITIONAL REFERENCE IS THE 1994 CONNDOT PUBLICATION "ON-SITE MITIGATION FOR CONSTRUCTION ACTIVITIES".

EROSION CONTROL
ALL AREAS SHALL BE PROTECTED FROM EROSION DURING AND AFTER CONSTRUCTION, PARTICULARLY THE STORAGE OF EXCAVATED OR STOCKPILED MATERIAL. THE CONTRACTOR SHALL CAREFULLY STRIP ALL TOPSOIL, LOAM, OR ORGANIC MATTER PRIOR TO TRENCHING OR OTHER OPERATIONS AND SHALL STORE THEM SEPARATELY FROM ALL OTHER MATERIALS DURING EXCAVATION. EACH STOCKPILE MUST BE ADEQUATELY RINGED WITH SEDIMENTATION CONTROL SYSTEM (I.E. HAY BALES AND/OR GEOTEXTILE FENCE). DEBRIS AND OTHER WASTE RESULTING FROM EQUIPMENT MAINTENANCE AND CONSTRUCTION WILL NOT BE DISCARDED ON SITE. STABILIZING OF SLOPES SHALL BE DONE IMMEDIATELY AFTER CONSTRUCTION OF SLOPES. SLOPES STEEPER THAN 4:1 SHALL BE PROTECTED WITH EROSION CONTROL MATTING. THIS MATTING IS MANUFACTURED COMBINATIONS OF MULCH AND NETTING AND SHALL BE INSTALLED IN ACCORDANCE WITH THE MANUFACTURER'S RECOMMENDATIONS. ALL OTHER AREAS SHALL BE MULCHED WITH HAY OR STRAW AT A RATE OF 2 TO 3 TONS PER ACRE. STRAW OR HAY MULCH MUST BE ANCHORED IMMEDIATELY AFTER SPREADING TO PREVENT WINDBLOWING. THE METHODS RECOMMENDED BY THE "CONNECTICUT GUIDELINES FOR SOIL EROSION AND SEDIMENTATION CONTROL" SHALL BE USED FOR THE ANCHORING OF MULCH OR NETTING.

EROSION AND SEDIMENTATION CONTROL PLAN
AN EROSION AND SEDIMENTATION CONTROL PLAN MUST BE SUBMITTED IN WRITING TO THE ENGINEER AND APPROVED BY THE ENGINEER PRIOR TO THE COMMENCEMENT OF ANY CONSTRUCTION ACTIVITIES.
SEDIMENTATION CONTROL SYSTEM - THE SEDIMENTATION CONTROL SYSTEM SHALL CONSIST OF A GEOTEXTILE BARRIER FENCE. THE SEDIMENTATION CONTROL SYSTEM SHALL BE INSTALLED IMMEDIATELY AFTER A CUT SLOPE HAS BEEN GRADED, BEFORE A FILL SLOPE HAS BEEN CREATED AND AS INDICATED ON THE PLANS. THE SYSTEM IS DESIGNED TO INTERCEPT SILT AND SEDIMENT BEFORE IT REACHES THE WETLANDS OR WATERCOURSES. DEPOSITS OF SEDIMENT AND SILT ARE TO BE PERIODICALLY REMOVED FROM THE UPSTREAM SIDE OF THE FENCE. THIS MATERIAL IS TO BE SPREAD AND STABILIZED IN AREAS NOT SUBJECT TO EROSION, OR IN AREAS WHICH ARE NOT TO BE PAVED OR BUILT ON. THE SEDIMENTATION CONTROL SYSTEM IS TO BE REPLACED AS NECESSARY TO PROVIDE PROPER FILTERING ACTION. THE SYSTEM IS TO REMAIN IN PLACE AND BE MAINTAINED TO INSURE EFFICIENT SILTATION CONTROL UNTIL ALL AREAS ABOVE THE FENCE ARE STABILIZED AND VEGETATION HAS BEEN ESTABLISHED.

STACKED HAY BALES - HAY OR STRAW BALES USED FOR EROSION CONTROL SHALL BE STACKED AT CATCH BASINS WHERE SEDIMENT MAY ENTER THE CATCH BASIN OR AS DIRECTED BY THE RESIDENT ENGINEER. DEPOSITS OF SEDIMENT AND SILT ARE TO BE PERIODICALLY REMOVED FROM THE UPSTREAM SIDE OF THE EROSION CHECKS. THIS MATERIAL IS TO BE SPREAD AND STABILIZED IN AREAS NOT SUBJECT TO EROSION, OR IN AREAS WHICH ARE NOT TO BE PAVED OR BUILT ON. HAY OR STRAW BALES ARE TO BE REPLACED AS NECESSARY TO PROVIDE PROPER FILTERING ACTION. THE SYSTEM IS TO REMAIN IN PLACE AND BE MAINTAINED TO INSURE EFFICIENT SILTATION CONTROL UNTIL ALL AREAS ABOVE THE EROSION CHECKS ARE STABILIZED AND VEGETATION HAS BEEN ESTABLISHED.

IN ALL AREAS, REMOVAL OF TREES, BUSHES, AND OTHER VEGETATION, AND DISTURBANCE OF THE SOIL, IS TO BE KEPT TO AN ABSOLUTE MINIMUM WHILE ALLOWING PROPER DEVELOPMENT OF THE SITE.

DURING CONSTRUCTION, AS SMALL AN AREA OF SOIL AS POSSIBLE SHOULD BE EXPOSED FOR AS SHORT A TIME AS POSSIBLE. AFTER CONSTRUCTION, GRADE, RESPREAD TOPSOIL, AND STABILIZE SOIL BY SEEDING AND MULCHING AS TO PREVENT EROSION.

EROSION AND SEDIMENTATION CONTROL MAINTENANCE PROCEDURES
ALL EROSION AND SEDIMENTATION CONTROL DEVICES SHALL BE INSPECTED DURING CONSTRUCTION ON A DAILY BASIS AND FOLLOWING ALL STORMS BY THE RESIDENT ENGINEER. THE CONTRACTOR SHALL MAINTAIN AND MAKE REPAIRS AND REMOVE SEDIMENT AS REQUESTED BY THE RESIDENT ENGINEER. THIS WORK SHALL BE PERFORMED WITHIN 24 HOURS OF THE REQUEST AND THERE SHALL BE NO SEPARATE PAYMENT FOR THIS WORK.

THE CONTRACTOR SHALL CLEAN SEDIMENT AND DEBRIS FROM ALL DRAINAGE STRUCTURES, AND PIPES AT THE COMPLETION OF CONSTRUCTION, AND AS REQUESTED BY THE RESIDENT INSPECTOR TO KEEP THE SYSTEM FUNCTIONING PROPERLY DURING CONSTRUCTION.

FOLLOWING COMPLETION OF CONSTRUCTION, THE CONTRACTOR SHALL REPAIR ALL ERODED AREAS AND ENSURE A GOOD STAND OF TURF IS ESTABLISHED THROUGHOUT. THE CONTRACTOR SHALL REPAIR ALL ERODED OR DISPLACED RIPRAP, AND CLEAN SEDIMENT COVERED STONES.

ALL APPROPRIATE EROSION AND SEDIMENT CONTROL MEASURES SHOULD BE ESTABLISHED PRIOR TO AND BE MAINTAINED THROUGH ALL CONSTRUCTION PHASES.

THE INFORMATION, INCLUDING ESTIMATED QUANTITIES OF WORK SHOWN ON THESE SHEETS IS BASED ON LIMITED INVESTIGATIONS BY THE TOWN AND IS IN NO WAY WARRANTED TO INDICATE THE TRUE CONDITIONS OR ACTUAL QUANTITIES OR DISTRIBUTION OF QUANTITIES OF WORK WHICH WILL BE REQUIRED.

NO.	DATE	DESCRIPTION

REVISIONS

SUPV.	K.O.E.
DESIGN	E.D.
DRAWN	N.S. / S.A.M.
CHECKED	J.A.W.
DATE	09/07/2021

WMC CONSULTING ENGINEERS
• WENGELL, McDONNELL & COSTELLO •
87 HOLMES ROAD
NEWINGTON, CT 06111
(860) 667-9624

PREPARED FOR
CITY OF MERIDEN
142 E MAIN STREET
MERIDEN, CT 06450

REPLACEMENT OF CEDAR STREET BRIDGE OVER HARBOR BROOK EROSION & SEDIMENTATION CONTROL DETAILS

SIZE	PROJECT	FILE NAME	NUMBER	REV.	SHEET	OF
D –	CEDAR STREET –	F.D. –	17088 –		17	32

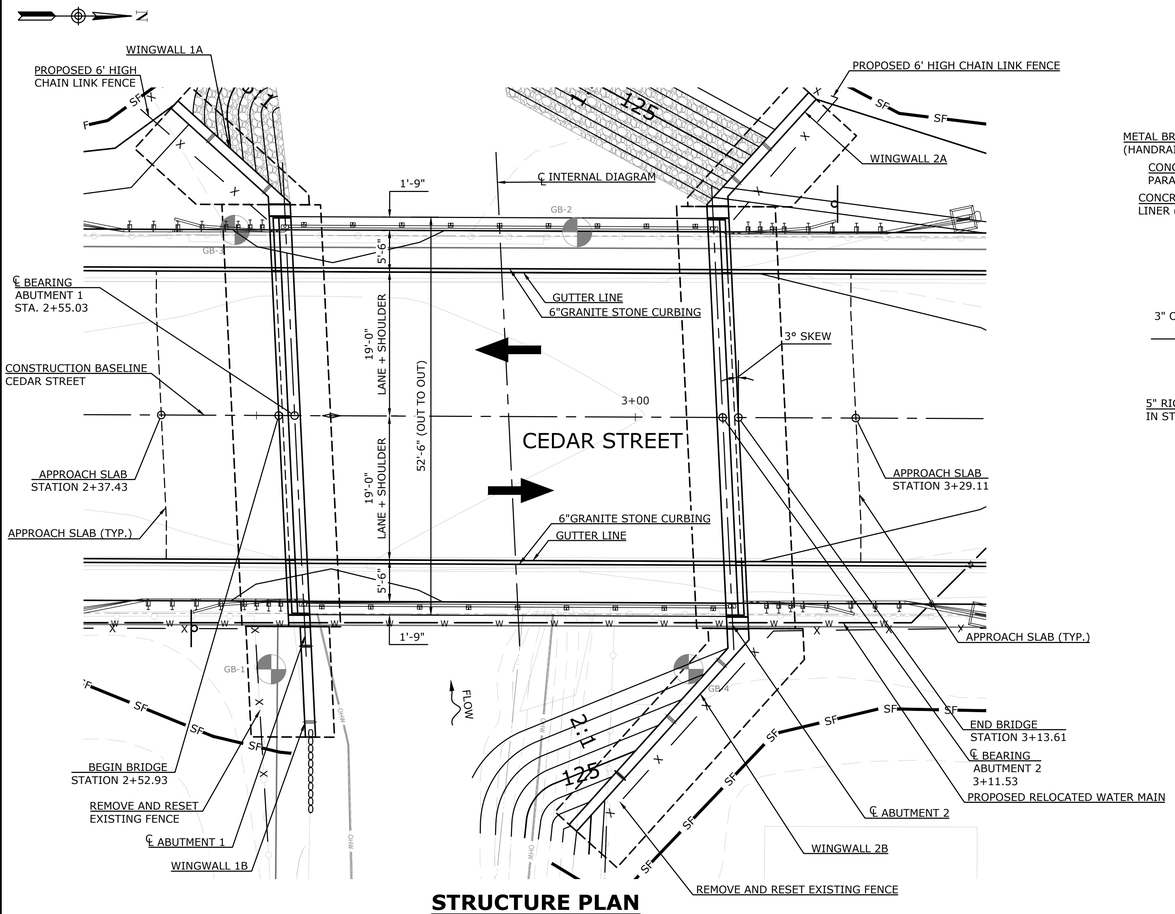

STRUCTURE PLAN

SCALE: 1" = 10'-0"

APPROXIMATE BORING LOCATIONS

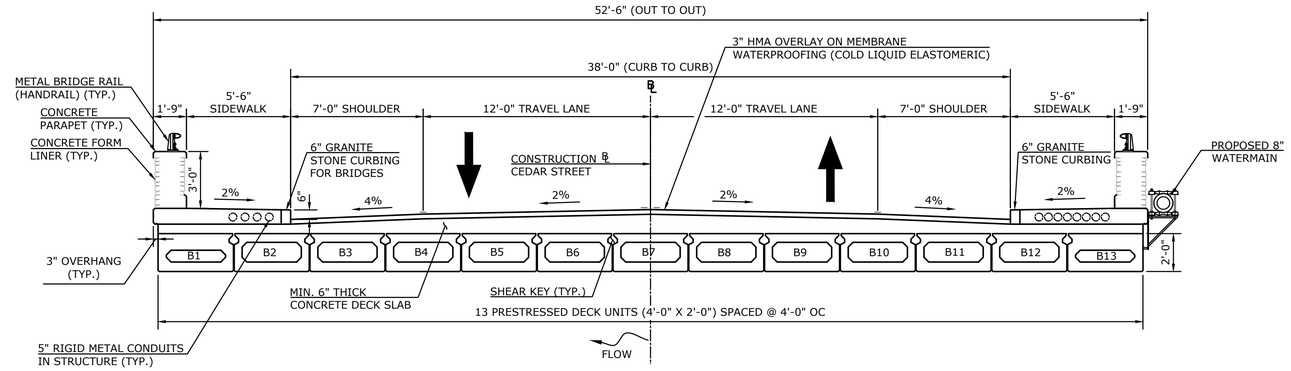

BRIDGE SECTION (NORMAL TO BASELINE)

SCALE: 1" = 4'-0"

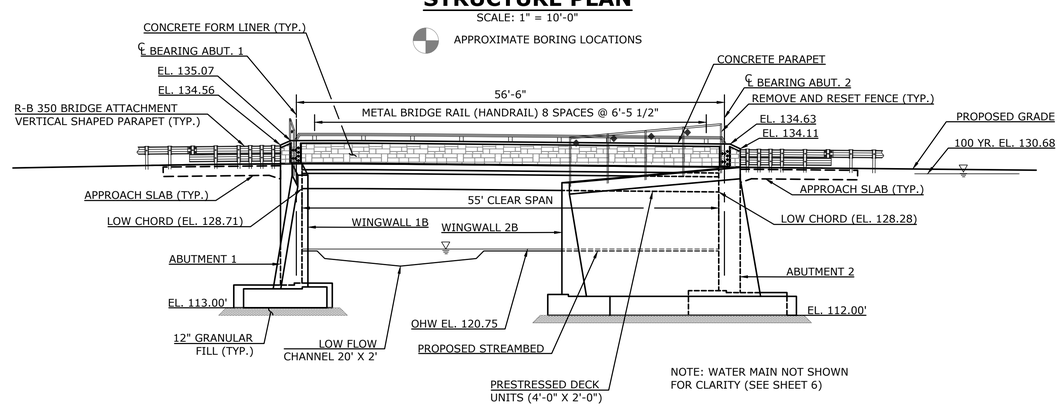

UPSTREAM BRIDGE ELEVATION (LOOKING DOWNSTREAM)

SCALE: 1" = 10'-0"

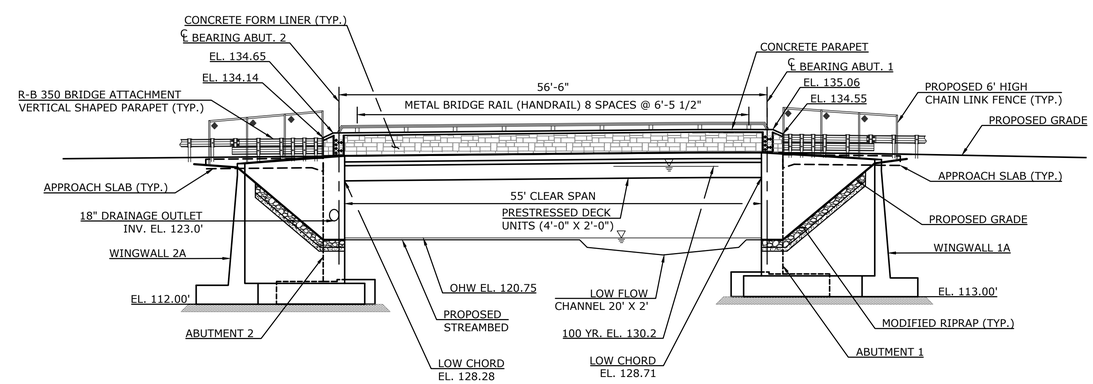

DOWNSTREAM BRIDGE ELEVATION (LOOKING UPSTREAM)

SCALE: 1" = 10'-0"

THE INFORMATION, INCLUDING ESTIMATED QUANTITIES OF WORK SHOWN ON THESE SHEETS IS BASED ON LIMITED INVESTIGATIONS BY THE TOWN AND IS IN NO WAY WARRANTED TO INDICATE THE TRUE CONDITIONS OR ACTUAL QUANTITIES OR DISTRIBUTION OF QUANTITIES OF WORK WHICH WILL BE REQUIRED.

NO.	DATE	DESCRIPTION

REVISIONS

SUPV.	K.O.E.
DESIGN	E.D.
DRAWN	N.S. / S.A.M.
CHECKED	J.A.W.
DATE	09/07/2021

WMC CONSULTING ENGINEERS

• WENGELL, McDONNELL & COSTELLO •
87 HOLMES ROAD
NEWINGTON, CT 06111
(860) 667-9624

PREPARED FOR

CITY OF MERIDEN
142 E MAIN STREET
MERIDEN, CT 06450

REPLACEMENT OF CEDAR STREET BRIDGE OVER HARBOR BROOK
STRUCTURE, ELEVATION & SECTION PLAN

SIZE	PROJECT	FILE NAME	NUMBER	REV.	SHEET	OF
D –	CEDAR STREET –	F.D. –	17088 –		18	32

GENERAL NOTES:

SPECIFICATIONS: CONNECTICUT DEPARTMENT OF TRANSPORTATION FORM 818 (2020), SUPPLEMENTAL SPECIFICATIONS DATED JANUARY 2021, AND SPECIAL PROVISIONS.

DESIGN SPECIFICATIONS: AASHTO LRFD BRIDGE DESIGN SPECIFICATIONS (AASHTO 2017, 8TH EDITION WITH LATEST INTERIMS), AS SUPPLEMENTED BY THE CONNECTICUT DEPARTMENT OF TRANSPORTATION BRIDGE DESIGN MANUAL (2003) UP TO 2019 REVISIONS.

MATERIAL STRENGTHS:

CONCRETE:
CLASS PCC 03340 f'c = 3000 P.S.I.
CLASS PCC 04460 f'c = 4000 P.S.I.
CLASS PCC 04462 f'c = 4000 P.S.I.
CLASS PCC 07262 f'c = 6500 P.S.I.

THE SPECIFIED CONCRETE STRENGTH USED IN DESIGN (f'c) OF THE CONCRETE COMPONENTS IS NOTED ABOVE. THE MINIMUM COMPRESSIVE STRENGTH OF THE CONCRETE IN THE CONSTRUCTED COMPONENTS SHALL CONFORM TO THE REQUIREMENTS OF SECTION 6.01 - CONCRETE FOR STRUCTURES, AND M.03 - PORTLAND CEMENT CONCRETE.

REINFORCEMENT:
ASTM A615 GRADE 60 fy = 60,000 P.S.I.

LIVE LOAD: HL-93, LEGAL AND PERMIT VEHICLES

FUTURE PAVING ALLOWANCE: NONE

HMA OVERLAY: THIS SHALL CONSIST OF 2" MIN. OF HMA S0.5 ON TOP OF 1" OF HMA S0.25 ON MEMBRANE WATERPROOFING (COLD LIQUID ELASTOMERIC).

FOUNDATION PRESSURES: THE VARIOUS GROUP LOADINGS NOTED ON THE SUBSTRUCTURE PLAN SHEETS REFER TO THE GROUP LOADS AS GIVEN IN THE AASHTO *LRFD BRIDGE DESIGN SPECIFICATIONS*.

DIMENSIONS: ALL DIMENSIONS SHOWN ON THE PLANS ARE IN FEET AND INCHES EXCEPT IF NOTED OTHERWISE. ALL ELEVATIONS ARE GIVEN IN FEET. WHEN ELEVATIONS AND ARE GIVEN TO LESS THAN THREE DECIMAL PLACES, THE OMITTED DIGITS SHALL BE ASSUMED TO BE ZEROS.

EXISTING DIMENSIONS: DIMENSIONS OF THE EXISTING STRUCTURE SHOWN ON THESE PLANS ARE FOR GENERAL REFERENCE ONLY AND ARE NOT GUARANTEED. THE CONTRACTOR SHALL TAKE ALL FIELD MEASUREMENTS NECESSARY TO ASSURE PROPER FIT OF THE FINISHED WORK AND SHALL ASSUME FULL RESPONSIBILITY OF THEIR ACCURACY. WHEN SHOP DRAWINGS BASED ON FIELD MEASUREMENTS ARE SUBMITTED FOR APPROVAL, FIELD MEASUREMENTS SHALL ALSO BE SUBMITTED FOR REFERENCE BY THE REVIEWER.

REMOVAL OF EXISTING BRIDGE: BEFORE INITIATING CONSTRUCTION, CONTRACTOR SHALL SUBMIT A PLAN FOR APPROVAL DEFINING METHOD FOR PROTECTION OF THE STREAM AREA DURING REMOVAL OF EXISTING BRIDGE. COST TO BE INCLUDED IN THE COST OF "REMOVAL OF EXISTING BRIDGE".

COFFERDAMS AND DEWATERING AND HANDLING WATER: BEFORE INITIATING CONSTRUCTION, THE CONTRACTOR SHALL SUBMIT A PLAN FOR APPROVAL THAT DEFINES METHODS AND MATERIALS FOR CONTROLLING STREAM WATER (COFFERDAMS, ETC.), DEWATERING, STRUCTURE EXCAVATION AND PROTECTING THE STREAM DURING VARIOUS STAGES OF CONSTRUCTION. THE COST OF THIS WORK SHALL BE INCLUDED IN THE COST OF "COFFERDAM AND DEWATERING" AND "HANDLING WATER".

UTILITY RELOCATIONS: OVERHEAD OR UNDERGROUND UTILITY LINES MAY BE IN CONFLICT WITH TEMPORARY SHEETING OR COFFERDAMS, SETTING OF PRECAST BOX BEAMS OR OTHER CONSTRUCTION. DEPENDING UPON THE CONTRACTOR'S CONSTRUCTION OPERATIONS, THESE UTILITIES MAY NEED TO BE RELOCATED TO TEMPORARY LOCATIONS FOR PORTIONS OF THE CONSTRUCTION OPERATIONS AND THEN MOVED BACK TO PERMANENT LOCATIONS WHICH MAY BE OTHER THAN CURRENT LOCATIONS. THE ACTUAL UTILITY RELOCATIONS (PERMANENT OR TEMPORARY) WILL BE THE RESPONSIBILITY OF THE INDIVIDUAL UTILITY OWNER, HOWEVER THE CONTRACTOR WILL BE REQUIRED TO COORDINATE ALL UTILITY RELOCATIONS WITH EACH UTILITY OWNER AND TO PHASE HIS WORK AS REQUIRED TO ACCOMMODATE TEMPORARY AND PERMANENT UTILITY RELOCATION WORK. THE CONTRACTOR SHALL HAVE NO RIGHT TO CLAIM EXTRA COMPENSATION FOR DELAYS OR STAGING AND PHASING OF HIS WORK DUE TO UTILITY RELOCATION WORK.

UNCONFINED IN-STREAM ACTIVITY: UNCONFINED IN-STREAM ACTIVITIES MUST BE LIMITED TO THE TIME PERIOD JUNE 1 THROUGH SEPTEMBER 30.

BRIDGE IDENTIFICATION PLACARDS: THE CONTRACTOR SHALL PROVIDE AND INSTALL NEW BRIDGE IDENTIFICATION PLACARDS AT EACH LEADING END OF THE BRIDGE ON THE TRAFFIC SIDE. THE SIGNS SHALL BE FABRICATED WITH 40 GUAGE ALUMINUM SHEET METAL. THE SIGNS SHALL BE 4"X12" WITH 3" WHITE REFLECTIVE BLOCK LETTERS ON GREEN REFLECTIVE SHEETING. EACH SIGN SHALL READ "04841". ALL COST ASSOCIATED WITH PROVIDING AND INSTALLING THE BRIDGE SIGNS SHALL BE COVERED UNDER ITEM "SIGN FACE - SHEET ALUMINUM (TYPE IX RETROREFLECTIVE SHEETING)". THE FINAL LOCATION AND ATTACHMENT METHOD FOR THE SIGNS SHALL BE APPROVED BY THE ENGINEER PRIOR TO INSTALLATION.

CONCRETE NOTES:

CONCRETE: THE FOLLOWING PAY ITEMS AND CONCRETE CLASSES ARE REQUIRED FOR CAST-IN-PLACE BRIDGE COMPONENTS:

ITEM	BRIDGE COMPONENTS	PCC CLASS
FOOTING CONCRETE	WINGWALL, ABUTMENT FOOTINGS	PCC03340
ABUTMENT AND WALL CONCRETE	ABUTMENT, WINGWALL, BACKWALL STEMS, , AND CHEEKWALLS	PCC03340
APPROACH SLAB CONCRETE	APPROACH SLABS	PCC04460
BRIDGE DECK CONCRETE	BRIDGE DECK	PCC04462
PARAPET CONCRETE	BRIDGE PARAPETS	PCC04462
BRIDGE SIDEWALK CONCRETE	BRIDGE SIDEWALKS	PCC04462

JOINT SEAL: SEE SECTION 6.01 "CONCRETE FOR STRUCTURE".
EXPOSED EDGES: EXPOSED EDGES OF CONCRETE SHALL BE BEVELED 1"X1" UNLESS DIMENSIONED OTHERWISE
CONCRETE COVER: ALL REINFORCEMENT SHALL HAVE MIN. 2" COVER UNLESS DIMENSIONED OTHERWISE.
REINFORCEMENT: ALL REINFORCEMENT SHALL BE GALVANIZED AFTER FABRICATION UNLESS OTHERWISE NOTED. ALL REINFORCEMENT SHALL CONFORM TO THE REQUIREMENTS OF ASTM A767, CLASS1, INCLUDING SUPPLEMENTAL REQUIREMENTS. THE COST OF FURNISHING AND PLACING REINORCEMENT SHALL BE INCLUDED IN THE ITEM "DEFORMED STEEL BARS - GALVANIZED". ALL REINFORCEMENT SHALL BE ASTM A615 GRADE 60.
CONSTRUCTION JOINTS: CONSTRUCTION JOINTS, OTHER THAN THOSE SHOWN ON THE PLANS, WILL NOT BE PERMITTED WITHOUT PRIOR APPROVAL OF THE ENGINEER.
COMPOSITE STRUCTURE: NO TEMPORARY INTERMEDIATE SUPPORT SHALL BE USED DURING THE PLACING AND SETTING OF THE CONCRETE DECK SLAB. CONSTRUCTION LOADS AND DEAD LOADS WILL BE PERMITTED WHEN DIRECTED BY THE ENGINEER BUT ONLY WHEN THE DECK CONCRETE HAS REACHED A STRENGTH OF f'c=3500 PSI. LIVE LOADS (TRAFFIC WILL BE PERMITTED ON THE STRUCTURE AFTER THE DECK CONCRETE HAS REACHED A STRENGTH OF f'c=4000 PSI
PREFORMED EXPANSION JOINT FILLER: AS SHOWN ON THE PLANS. THE COST OF FURNISHING AND INSTALLING PREFORMED EXPANSION JOINT FILLER IS PAID FOR AS "(THICKNESS AND TYPE) JOINT FILLER FOR BRIDGES".
CLOSED CELL ELASTOMER: FURNISHING AND INSTALLING CLOSED CELL ELASTOMER SHALL BE INCLUDED IN THE ITEM "1" CLOSED CELL ELASTOMER".

PRESTRESSED DECK UNIT SHIPPING DATA

MEMBER	SHIPPING LENGTH	SHIPPING HEIGHT	SHIPPING WIDTH	SHIPPING WEIGHT
B1,B13	58'-0"	2'-3"	4'-0"	53,976 LBS
B2-B12	58'-0"	2'-3"	4'-0"	43.368 LBS

HYDRAULIC DATA

DRAINAGE AREA	9.06 SQ. MILES
DESIGN FREQUENCY	100 YEAR
DESIGN DISCHARGE	3,164 C.F.S.
AVERAGE DAILY FLOW ELEVATION	120.75 FT.
UPSTREAM DESIGN WATER SURFACE ELEVATION	130.68 FT.
DOWNSTREAM DESIGN WATER SURFACE ELEVATION	130.20 FT.

NOTICE TO BRIDGE INSPECTORS

THE DEPARTMENT'S BRIDGE SAFETY PROCEDURES REQUIRE THIS BRIDGE TO BE INSPECTED FOR, BUT NOT LIMITED TO, ALL APPROPRIATE COMPONENTS INDICATED IN THE GOVERNING MANUALS FOR BRIDGE INSPECTION. ATTENTION MUST BE GIVEN TO INSPECTING THE FOLLOWING SPECIAL COMPONENTS AND DETAILS. (THE LISTING OF COMPONENTS FOR SPECIFIC ATTENTION SHALL NOT BE CONSTRUED TO REDUCE THE IMPORTANCE OF INSPECTION OF ANY OTHER COMPONENT OF THE STRUCTURE.) THE FREQUENCY OF INSPECTION OF THIS STRUCTURE SHALL BE IN ACCORDANCE WITH THE GOVERNING MANUALS FOR BRIDGE INSPECTION, UNLESS OTHERWISE DIRECTED BY THE MANAGER OF BRIDGE SAFETY AND EVALUATION.

COMPONENT OR DETAIL	STRUCTURE SHEET REFERENCE
NONE	NONE

CONCRETE DISTRIBUTION

SUPERSTRUCTURE	C.Y.	186
SUBSTRUCTURE	C.Y.	272
FOOTING	C.Y.	258
TOTAL	C.Y.	716

INSPECTION OF FIELD WELDS

METHODS	UNIT	QUANTITY
ULTRASONIC	INCHES	NONE
MAGNETIC PARTICLE	FEET	NONE

NO.	DATE	DESCRIPTION

REVISIONS

SUPV. K.O.E.
DESIGN E.D.
DRAWN N.S. / S.A.M.
CHECKED J.A.W.
DATE 09/07/2021

WMC CONSULTING ENGINEERS
• WENGELL, McDONNELL & COSTELLO •
87 HOLMES ROAD
NEWINGTON, CT 06111
(860) 667-9624

PREPARED FOR
CITY OF MERIDEN
142 E MAIN STREET
MERIDEN, CT 06450

REPLACEMENT OF CEDAR STREET
BRIDGE OVER HARBOR BROOK
STRUCTURAL GENERAL NOTES

SIZE	PROJECT	FILE NAME	NUMBER	REV.	SHEET OF
D –	CEDAR STREET –	F.D. –	17088 –		19 / 32

TEST BORING LOG

MILONE & MACBROOM
99 Realty Drive
Cheshire, CT 06410
(203) 271-1773

PROJECT: Cedar Street Bridge	BORING NO.: GB-1	SHEET: 1 of 2	
LOCATION: Meriden, Connecticut	CONTRACTOR: SITE, LLC		
PROJ. NO: 1261-72	FOREMAN: John		
CLIENT: City of Meriden	INSPECTOR: Peter S		
DATE: April 17, 2018	GROUND SURFACE ELEVATION: xx		

EQUIPMENT:	AUGER	CASING	SAMPLER	COREBRL.	GROUNDWATER DEPTH (FT.)			TYPE OF RIG:
TYPE	HSA	-	SS	-	DATE	TIME	WATER DEPTH	ATV/BOMBARDIER
SIZE OD (IN.)	4	-	2	-	17-Apr-18	8:00	7.8'	RIG MODEL:
HMR. WT (LB.)	-	-	140	-				CME-55
HMR. FALL (IN.)	-	-	30	-				LABORATORY TESTING ☐

Depth (FT)	SAMPLE NUMBER	RECOVERY (IN)	BLOWS PER 6"	SOIL AND ROCK CLASSIFICATION-DESCRIPTION BURMISTER SYSTEM (SOIL) U.S. CORPS OF ENGINEERS SYSTEM (ROCK)	DEPTH (FT.)	STRATUM DESCRIPTION	ELEV. (FT.)	Remark
1	S-1	14	1 1 2 2	S-1: Very Loose, Top 9": brown, fine SAND AND SILT, some Organic. Middle 9": reddish-brown, fine SAND, some Silt, trace red-brick fragments, trace coal fragments, trace fire-brick fragments. Bottom 14": reddish-brown, fine SAND, little Silt, trace coal fragments, trace red-brick fragments	0.75	TOPSOIL	#####	1
2 3	S-2	14	4 5 5 4	S-2: Loose, reddish-brown, fine to medium SAND, trace Silt, trace coal fragments, trace fire-brick.		FILL		
5 6	S-3	10	1 2 1 2	S-3: Very Loose, reddish-brown, fine to medium SAND, trace Silt, trace coal fragments, trace slag, trace glass fragments				
7 8	S-4	11	2 2 2 4	S-4: Very Loose, Top 2": red-brick crushed. Bottom 9": Wet, reddish-brown fine SAND, little gray ash, trace coal fragments, trace red-brick fragments, trace coal fragments.	7.8	G.W.T ▽	####	2
9 10					10.5		#####	
11	S-5	14	6 3 2 2	S-5: Loose, Top 4": Wet, reddish-brown, fine to medium SAND, trace fine Gravel, trace red-brick fragments, trace coal fragments. Bottom 10": Wet, reddish-brown, fine SAND, trace Silt		FINES		
12 13 14 15								
16	S-6	20	1 2 4 3	S-6: Loose, Top 18": Wet, reddish-brown, fine SAND. Bottom 2": Wet, reddish-brown, fine SAND, some Silt, little Clay, trace fine Gravel.				
17 18 19 20					16.5		####	
21	S-7	6	5 6 10 19	S-7: Medium dense, Top 5": Wet, reddish-brown, fine to medium SAND, some clayey Silt, trace fine Gravel. Bottom 1": Arkose fragments		GLACIAL TILL		
22								

Remarks: 1. Environmental Sample from 1-3'
2. Environmental Sample from 6-8'

COHESIONLESS SOILS	COHESIVE SOILS	SAMPLE TYPE	PROPORTIONS
N = 0 - 4 = VERY LOOSE	N = 0 -2 = VERY SOFT	C = ROCK CORE	trace = 0% - 10%
4-10 = LOOSE	2 - 4 = SOFT	S = SPLIT SPOON	little = 10% - 20%
10-30 = MEDIUM	4 - 8 = MEDIUM	UP = UNDISTURBED PISTON	some = 20% - 35%
30-50 = DENSE	8 -15 = STIFF	UT = UNDISTURBED THINWALL	and = 35% - 50%
50 + = VERY DENSE	30 + = HARD		

GB-1
STATION=2+52.08
OFFSET=33.5' RT.
ELEV. 130.5±
NORTHING=757612.74
EASTING=987405.50

TEST BORING LOG

MILONE & MACBROOM
99 Realty Drive
Cheshire, CT 06410

PROJECT: Cedar Street Bridge	BORING NO.: GB-1	SHEET: 2 of 2	
LOCATION: Meriden, Connecticut	CONTRACTOR: SITE, LLC		
PROJ. NO: 1261-72	FOREMAN: John		
CLIENT: City of Meriden	INSPECTOR: Peter S		
DATE: April 17, 2018	GROUND SURFACE ELEVATION: xx xx		

EQUIPMENT:	AUGER	CASING	SAMPLER	COREBRL.	GROUNDWATER DEPTH (FT.)			TYPE OF RIG:
TYPE	SSA	-	SS	-	DATE	TIME	WATER DEPTH	ATV/BOMBARDIER
SIZE OD (IN.)	4	-	2	-				RIG MODEL:
HMR. WT (LB.)	-	-	140	-				CME-55
HMR. FALL (IN.)	-	-	30	-				LABORATORY TESTING ☐

Depth (FT)	SAMPLE NUMBER	RECOVERY (IN)	BLOWS PER 6"	SOIL AND ROCK CLASSIFICATION-DESCRIPTION BURMISTER SYSTEM (SOIL) U.S. CORPS OF ENGINEERS SYSTEM (ROCK)	DEPTH (FT.)	STRATUM DESCRIPTION	ELEV. (FT.)	Remark
23					23.5		#####	3
24	S-8	1	50 at 1"	S-8: Very Dense, Arkose chip.	24.1	Possible Weathered Bedrock	#####	
25				Bottom of Exploration (Auger Refusal) 24'3"				
26 27 28 29 30 31 32 33 34 35 36 37 38 39 40 41 42 43 44								

Remarks:
3. Auger Refusal at 24'3", possible weathered bedrock at 23'5".

COHESIONLESS SOILS	COHESIVE SOILS	SAMPLE TYPE	PROPORTIONS
N = 0 - 4 = VERY LOOSE	N = 0 -2 = VERY SOFT	C = ROCK CORE	trace = 0% - 10%
4-10 = LOOSE	2 - 4 = SOFT	S = SPLIT SPOON	little = 10% - 20%
10-30 = MEDIUM	4 - 8 = MEDIUM	UP = UNDISTURBED PISTON	some = 20% - 35%
30-50 = DENSE	8 -15 = STIFF	UT = UNDISTURBED THINWALL	and = 35% - 50%
50 + = VERY DENSE	30 + = HARD		

TEST BORING LOG

MILONE & MACBROOM
99 Realty Drive
Cheshire, CT 06410

PROJECT: Cedar Street Bridge	BORING NO.: GB-2	SHEET: 1 of 1	
LOCATION: Meriden, Connecticut	CONTRACTOR: SITE, LLC		
PROJ. NO: 1261-72	FOREMAN: John		
CLIENT: City of Meriden	INSPECTOR: Peter S		
DATE: April 17, 2018	GROUND SURFACE ELEVATION: xx		

EQUIPMENT:	AUGER	CASING	SAMPLER	COREBRL.	GROUNDWATER DEPTH (FT.)			TYPE OF RIG:
TYPE	HSA	-	SS	-	DATE	TIME	WATER DEPTH	ATV/BOMBARDIER
SIZE OD (IN.)	4	-	2	-	17-Apr-18	9:50	5.5'	RIG MODEL:
HMR. WT (LB.)	-	-	140	-				CME-55
HMR. FALL (IN.)	-	-	30	-				LABORATORY TESTING ☐

Depth (FT)	SAMPLE NUMBER	RECOVERY (IN)	BLOWS PER 6"	SOIL AND ROCK CLASSIFICATION-DESCRIPTION BURMISTER SYSTEM (SOIL) U.S. CORPS OF ENGINEERS SYSTEM (ROCK)	DEPTH (FT.)	STRATUM DESCRIPTION	ELEV. (FT.)	Remark
1	S-1	12	1 2 2 3	S-1: Very Loose, Top 4": brown, fine SAND, little Silt, some Organic. Bottom 8": reddish-brown, fine to medium SAND, little fine Gravel.	0.75	TOPSOIL	#####	1
2 3	S-2	14	2 2 2 1	S-2: Very Loose, reddish-brown, medium to coarse SAND, little fine Gravel.		FILL		
4 5 6	S-3	4	1 3 4 3	S-3: Loose, wet, reddish-brown, fine to medium SAND, trace Silt, trace slag, trace red-brick fragments.	5.5	G.W.T ▽	#####	2
7 8	S-4	4	3 5 5 6	S-4: Loose, wet, reddish-brown, fine to medium SAND, trace Silt, trace slag, trace red-brick fragments.				3
9 10					10.		#####	
11	S-5	14	2 4 3 3	S-5: Loose, wet, reddish-brown, fine SAND, trace Silt.		FINES		
12 13 14 15					14.8		#####	
16	S-6	15	4 11 8 9	S-6: Medium dense, wet, reddish-brown, fine SAND, some Clayey Silt, little fine Gravel.		GLACIAL TILL		
17 18 19 20								
21	S-7	12	12 12 60+ 2"	S-7: Very dense, Top 10": wet, reddish-brown, fine SAND, some Silt and Clay, little fine Gravel. Bottom 2": arkose fragment	21.5		#####	
22				Bottom of Exploration (Auger Refusal) at 22'5"	22.8	INFERRED BEDROCK	#####	4

Remarks: 1. Environmental Sample from 1-3'
2. Environmental Sample from 5-7'
3. Temporary well installed, water sample at 9:50
4. Auger Refusal at 22'9", possible weathered bedrock at 23'5".

COHESIONLESS SOILS	COHESIVE SOILS	SAMPLE TYPE	PROPORTIONS
N = 0 - 4 = VERY LOOSE	N = 0 -2 = VERY SOFT	C = ROCK CORE	trace = 0% - 10%
4-10 = LOOSE	2 - 4 = SOFT	S = SPLIT SPOON	little = 10% - 20%
10-30 = MEDIUM	4 - 8 = MEDIUM	UP = UNDISTURBED PISTON	some = 20% - 35%
30-50 = DENSE	8 -15 = STIFF	UT = UNDISTURBED THINWALL	and = 35% - 50%
50 + = VERY DENSE	30 + = HARD		

GB-2
STATION=2+92.21
OFFSET=24.4' LT
ELEV. 130.4±
NORTHING=757653.13
EASTING=987347.81

THE INFORMATION, INCLUDING ESTIMATED QUANTITIES OF WORK SHOWN ON THESE SHEETS IS BASED ON LIMITED INVESTIGATIONS BY THE TOWN AND IS IN NO WAY WARRANTED TO INDICATE THE TRUE CONDITIONS OR ACTUAL QUANTITIES OR DISTRIBUTION OF QUANTITIES OF WORK WHICH WILL BE REQUIRED.

NO.	DATE	DESCRIPTION

REVISIONS

SUPV.	K.O.E.
DESIGN	E.D.
DRAWN	N.S. / S.A.M.
CHECKED	J.A.W.
DATE	09/07/2021

WMC CONSULTING ENGINEERS

• WENGELL, McDONNELL & COSTELLO •
87 HOLMES ROAD
NEWINGTON, CT 06111
(860) 667-9624

PREPARED FOR
CITY OF MERIDEN
142 E MAIN STREET
MERIDEN, CT 06450

REPLACEMENT OF CEDAR STREET BRIDGE OVER HARBOR BROOK
BORING LOGS - 1

SIZE	PROJECT	FILE NAME	NUMBER	REV.
D –	CEDAR STREET –	F.D. –	17088 –	

SHEET 20 OF 32

TEST BORING LOG

MILONE & MACBROOM
99 Realty Drive
Cheshire, CT 06410
(203) 271-1773

PROJECT: Cedar Street Bridge		BORING NO.: GB-3	SHEET: 1 of 1
LOCATION: Meriden, Connecticut		CONTRACTOR: SITE, LLC	
PROJ. NO: 1261-72		FOREMAN: John	
CLIENT: City of Meriden		INSPECTOR: Peter S	
DATE: April 17/18, 2018		GROUND SURFACE ELEVATION: xx	

EQUIPMENT:	AUGER	CASING	SAMPLER	COREBRL.	GROUNDWATER DEPTH (FT.)			TYPE OF RIG:
TYPE	HSA	-	SS	NX	DATE	TIME	WATER DEPTH	ATV/BOMBARDIER
SIZE OD (IN.)	4	-	2	3	17-Apr-18	11:00	6'	RIG MODEL:
HMR. WT (LB.)	-	-	140	-				CME-55
HMR. FALL (IN.)	-	-	30	-				LABORATORY TESTING ☐

Depth (FT)	SAMPLE NUMBER	RECOVERY (IN)	BLOWS PER 6"	SOIL AND ROCK CLASSIFICATION-DESCRIPTION BURMISTER SYSTEM (SOIL) U.S. CORPS OF ENGINEERS SYSTEM (ROCK)	DEPTH (FT)	STRATUM DESCRIPTION	ELEV. (FT.)	Remark
1	S-1	12	1	S-1: Very Loose, Top 6": brown, fine SAND, little Silt, some Organic.	0.5	TOPSOIL	#####	
			1	Bottom 6": reddish-brown, fine to medium SAND, little Silt, trace red-brick fragments,				1
			1	trace ash.				
2			2					
	S-2	12	2	S-2: Very Loose, Top 3": ash. Bottom 9": reddish-brown, fine to medium SAND,				
3			2	trace red-brick fragments, trace coal fragments.				
			2					
4			2					
	S-3	18	4	S-3: Very loose, Top 6": red-brick fragments. Bottom 12": reddish-brown, fine to medium				
5			2	SAND, trace Silt, trace red-brick fragments, trace fire-brick.		FILL		
			1					
6			2		6	G.W.T ▽	#####	2
7								
8								
9								
10					10		#####	
11	S-4	16	3	S-4: Loose, wet, reddish-brown, fine to medium SAND, trace Silt				
			5					
12			4					
			4			FINES		
13					13.5		#####	3
14								
15								
16	S-5	15	10	S-5: Dense, wet, reddish-brown, fine to medium Sand, some Silt, little fine Gravel,				
			10	trace Clay.		GLACIAL TILL		
17			26					
			24					
18								
19								
20			65/4"	S-6: Very Dense, arkose fragment				
21								
				Auger Refusal at 22'				
22					22		#####	
	C-1		2.16	*See Next Page*		BEDROCK (ARKOSE)		

Remarks:
1. Environmental Sample from 1-3'
2. Environmental Sample from 4-6'
3. Auger chatter, possible transition to Glacial Till
4. Possible transition to weathered rock based on auger rate of drilling and pressure.

COHESIONLESS SOILS	COHESIVE SOILS	SAMPLE TYPE	PROPORTIONS
N = 0 - 4 = VERY LOOSE	N = 0 -2 = VERY SOFT	C = ROCK CORE	trace = 0%- 10%
4-10 = LOOSE	2 - 4 = SOFT	S = SPLIT SPOON	little = 10%- 20%
10-30 = MEDIUM	4 - 8 = MEDIUM	UP = UNDISTURBED PISTON	some = 20%- 35%
30-50 = DENSE	8 -15 = STIFF	UT = UNDISTURBED THINWALL	and = 35%- 50%
50 + = VERY DENSE	30 + = HARD		

GB-3
STATION=2+47.03
OFFSET=24.5' LT.
ELEV. 129.0±
NORTHING=757607.95
EASTING=987347.52

TEST BORING LOG

MILONE & MACBROOM
99 Realty Drive
Cheshire, CT 06410
(203) 271-1773

PROJECT: Cedar Street Bridge		BORING NO.: GB-3	SHEET: 2 of 2
LOCATION: Meriden, Connecticut		CONTRACTOR: SITE, LLC	
PROJ. NO: 1261-72		FOREMAN: John	
CLIENT: City of Meriden		INSPECTOR: Peter S	
DATE: April 17/18, 2018		GROUND SURFACE ELEVATION: ± xx	

EQUIPMENT:	AUGER	CASING	SAMPLER	COREBRL.	GROUNDWATER DEPTH (FT.)			TYPE OF RIG:
TYPE	HSA	-	SS	NX	DATE	TIME	WATER DEPTH	ATV/BOMBARDIER
SIZE OD (IN.)	4	-	2	3	17-Apr-18	11:00	6'	RIG MODEL:
HMR. WT (LB.)	-	-	140	-				CME-55
HMR. FALL (IN.)	-	-	30	-				LABORATORY TESTING ☐

Depth (FT)	SAMPLE NUMBER	RECOVERY (IN)	MIN. PER (FT)	SOIL AND ROCK CLASSIFICATION-DESCRIPTION BURMISTER SYSTEM (SOIL) U.S. CORPS OF ENGINEERS SYSTEM (ROCK)	DEPTH (FT)	STRATUM DESCRIPTION	ELEV. (FT.)	Remark
23			2.16	C-1: Good, Hard, reddish-brown, Arkose				
				RQD: 70%				
24			2.12					
25	C-1	60				BEDROCK (ARKOSE)		
			2.22					
26								
			2.35					
27			3					
				Bottom of Exploration ±27'	27'		103'	

Remarks:

COHESIONLESS SOILS	COHESIVE SOILS	SAMPLE TYPE	PROPORTIONS
N = 0 - 4 = VERY LOOSE	N = 0 -2 = VERY SOFT	C = ROCK CORE	trace = 0%- 10%
4-10 = LOOSE	2 - 4 = SOFT	S = SPLIT SPOON	little = 10%- 20%
10-30 = MEDIUM	4 - 8 = MEDIUM	UP = UNDISTURBED PISTON	some = 20%- 35%
30-50 = DENSE	8 -15 = STIFF	UT = UNDISTURBED THINWALL	and = 35%- 50%
50 + = VERY DENSE	30 + = HARD		

TEST BORING LOG

MILONE & MACBROOM
99 Realty Drive
Cheshire, CT 06410
(203) 271-1773

PROJECT: Cedar Street Bridge		BORING NO.: GB-4	SHEET: 1 of 2
LOCATION: Meriden, Connecticut		CONTRACTOR: SITE, LLC	
PROJ. NO: 1261-72		FOREMAN: John	
CLIENT: City of Meriden		INSPECTOR: Peter S	
DATE: April 17/18, 2018		GROUND SURFACE ELEVATION: xx	

EQUIPMENT:	AUGER	CASING	SAMPLER	COREBRL.	GROUNDWATER DEPTH (FT.)			TYPE OF RIG:
TYPE	HSA	-	SS	NX	DATE	TIME	WATER DEPTH	ATV/BOMBARDIER
SIZE OD (IN.)	4	-	2	3	18-Apr-18	8:00	7.08'	RIG MODEL:
HMR. WT (LB.)	-	-	140					CME-55
HMR. FALL (IN.)	-	-	30	-				LABORATORY TESTING ☐

Depth (FT)	SAMPLE NUMBER	RECOVERY (IN)	BLOWS PER 6"	SOIL AND ROCK CLASSIFICATION-DESCRIPTION BURMISTER SYSTEM (SOIL) U.S. CORPS OF ENGINEERS SYSTEM (ROCK)	DEPTH (FT)	STRATUM DESCRIPTION	ELEV. (FT.)	Remark
1	S-1	12	1	S-1: Loose, Top 6": brown, fine SAND, little Silt, some Organic.	0.5	TOPSOIL	#####	
			2	Bottom 6": reddish-brown, fine to medium SAND, little Silt, trace red-brick fragments,				1
			4	trace ash.				
2			5					
	S-2	8	4	S-2: Loose, Top 3": reddish-brown, fine to medium SAND, little Silt, trace				
3			2	red-brick fragments. Bottom 5": red-brick fragments.				
			3					
4			3					
	S-3	8	4	S-3: Medium dense, red BRICK fragments, some reddish-brown fine to medium SAND, little Silt				
5			5	trace porcelain fragments.		FILL		
			12					
6			2					
	S-4	4	1	S-4: Very Loose, red BRICK fragments, some reddish-brown fine to medium SAND,				
7			2	little Silt, trace coal fragments, trace porcelain fragments.	7	G.W.T ▽	#####	2
			1					3
8			0					
	S-5	8	2	S-5: Loose, wet, reddish-brown, coarse SAND, little Silt, some ash,				
9			4	some coal fragments, some porcelain fragments.				
			3					
10			4		10		#####	
			3	S-6: Very Loose, wet, reddish-brown, fine SAND, trace Silt				
11	S-6	10	2					
			2					
12			1					
13								
14								
15								
			1	S-6: Very Loose, wet, reddish-brown, fine SAND, trace Silt				
16	S-7	14	1					
			1					
17			2					
18								
19								
20								
			21	S-8: Medium dense, wet, reddish-brown, fine to medium SAND, some Silt, little fine Gravel,				
21	S-8	18	11	trace Clay.				
			16					
22			20					
					18.5	GLACIAL TILL	#####	4

Remarks:
1. Environmental Sample from 1-3'
2. Environmental Sample from 5-7'
3. Temporary well installed, sample at 8:00 on 4/18
4. Increased drilling effort reported.

COHESIONLESS SOILS	COHESIVE SOILS	SAMPLE TYPE	PROPORTIONS
N = 0 - 4 = VERY LOOSE	N = 0 -2 = VERY SOFT	C = ROCK CORE	trace = 0%- 10%
4-10 = LOOSE	2 - 4 = SOFT	S = SPLIT SPOON	little = 10%- 20%
10-30 = MEDIUM	4 - 8 = MEDIUM	UP = UNDISTURBED PISTON	some = 20%- 35%
30-50 = DENSE	8 -15 = STIFF	UT = UNDISTURBED THINWALL	and = 35%- 50%
50 + = VERY DENSE	30 + = HARD		

TEST BORING LOG

MILONE & MACBROOM
99 Realty Drive
Cheshire, CT 06410
(203) 271-1773

PROJECT: Cedar Street Bridge		BORING NO.: GB-4	SHEET: 2 of 2
LOCATION: Meriden, Connecticut		CONTRACTOR: SITE, LLC	
PROJ. NO: 1261-72		FOREMAN: John	
CLIENT: City of Meriden		INSPECTOR: Peter S	
DATE: April 18, 2018		GROUND SURFACE ELEVATION: ± xx	

EQUIPMENT:	AUGER	CASING	SAMPLER	COREBRL.	GROUNDWATER DEPTH (FT.)			TYPE OF RIG:
TYPE	SSA	-	SS	-	DATE	TIME	WATER DEPTH	ATV/BOMBARDIER
SIZE OD (IN.)	4	-	2	-				RIG MODEL:
HMR. WT (LB.)	-	-	140	-				CME-55
HMR. FALL (IN.)	-	-	30	-				LABORATORY TESTING ☐

Depth (FT)	SAMPLE NUMBER	RECOVERY (IN)	BLOWS PER 6"	SOIL AND ROCK CLASSIFICATION-DESCRIPTION BURMISTER SYSTEM (SOIL) U.S. CORPS OF ENGINEERS SYSTEM (ROCK)	DEPTH (FT)	STRATUM DESCRIPTION	ELEV. (FT.)	Remark
23								
24								
25								
			16	S-9: Medium Dense, wet, reddish-brown, fine to medium SAND, some Silt, some fine Gravel, trace Clay.				
26	S-9	23	19			GLACIAL TILL		
			18					
27			19					
28				Auger Refusal 28'10"				
			1.11					
29				C-1: Dense, reddish-brown, fine SAND, some Clayey Silt, little fine Gravel.				
			1.08					
30	C-1	60			30		#####	
			2.21	C-1: Good, Hard, Arkose				
31						BEDROCK (ARKOSE)		
			2.1					
32								
			1.55					
33					33		#####	
				Bottom of Exploration ±33'				
34								
35								
36								
37								
38								
39								
40								
41								
42								
43								
44								

Remarks:
1. Coring time shown as minutes and seconds per foot

COHESIONLESS SOILS	COHESIVE SOILS	SAMPLE TYPE	PROPORTIONS
N = 0 - 4 = VERY LOOSE	N = 0 -2 = VERY SOFT	C = ROCK CORE	trace = 0%- 10%
4-10 = LOOSE	2 - 4 = SOFT	S = SPLIT SPOON	little = 10%- 20%
10-30 = MEDIUM	4 - 8 = MEDIUM	UP = UNDISTURBED PISTON	some = 20%- 35%
30-50 = DENSE	8 -15 = STIFF	UT = UNDISTURBED THINWALL	and = 35%- 50%
50 + = VERY DENSE	30 + = HARD		

GB-4
STATION=3+07.17
OFFSET=33.2' RT.
ELEV. 130.5±
NORTHING=757667.83
EASTING=987405.49

THE INFORMATION, INCLUDING ESTIMATED QUANTITIES OF WORK SHOWN ON THESE SHEETS IS BASED ON LIMITED INVESTIGATIONS BY THE TOWN AND IS IN NO WAY WARRANTED TO INDICATE THE TRUE CONDITIONS OR ACTUAL QUANTITIES OR DISTRIBUTION OF QUANTITIES OF WORK WHICH WILL BE REQUIRED.

NO.	DATE	DESCRIPTION

REVISIONS

SUPV.	K.O.E.
DESIGN	E.D.
DRAWN	N.S. / S.A.M.
CHECKED	J.A.W.
DATE	09/07/2021

WMC CONSULTING ENGINEERS

• WENGELL, McDONNELL & COSTELLO •
87 HOLMES ROAD
NEWINGTON, CT 06111
(860) 667-9624

PREPARED FOR
CITY OF MERIDEN
142 E MAIN STREET
MERIDEN, CT 06450

REPLACEMENT OF CEDAR STREET BRIDGE OVER HARBOR BROOK
BORING LOGS - 2

SIZE	PROJECT	FILE NAME	NUMBER	REV.	SHEET	OF
D –	CEDAR STREET –	F.D. –	17088 –		21	32

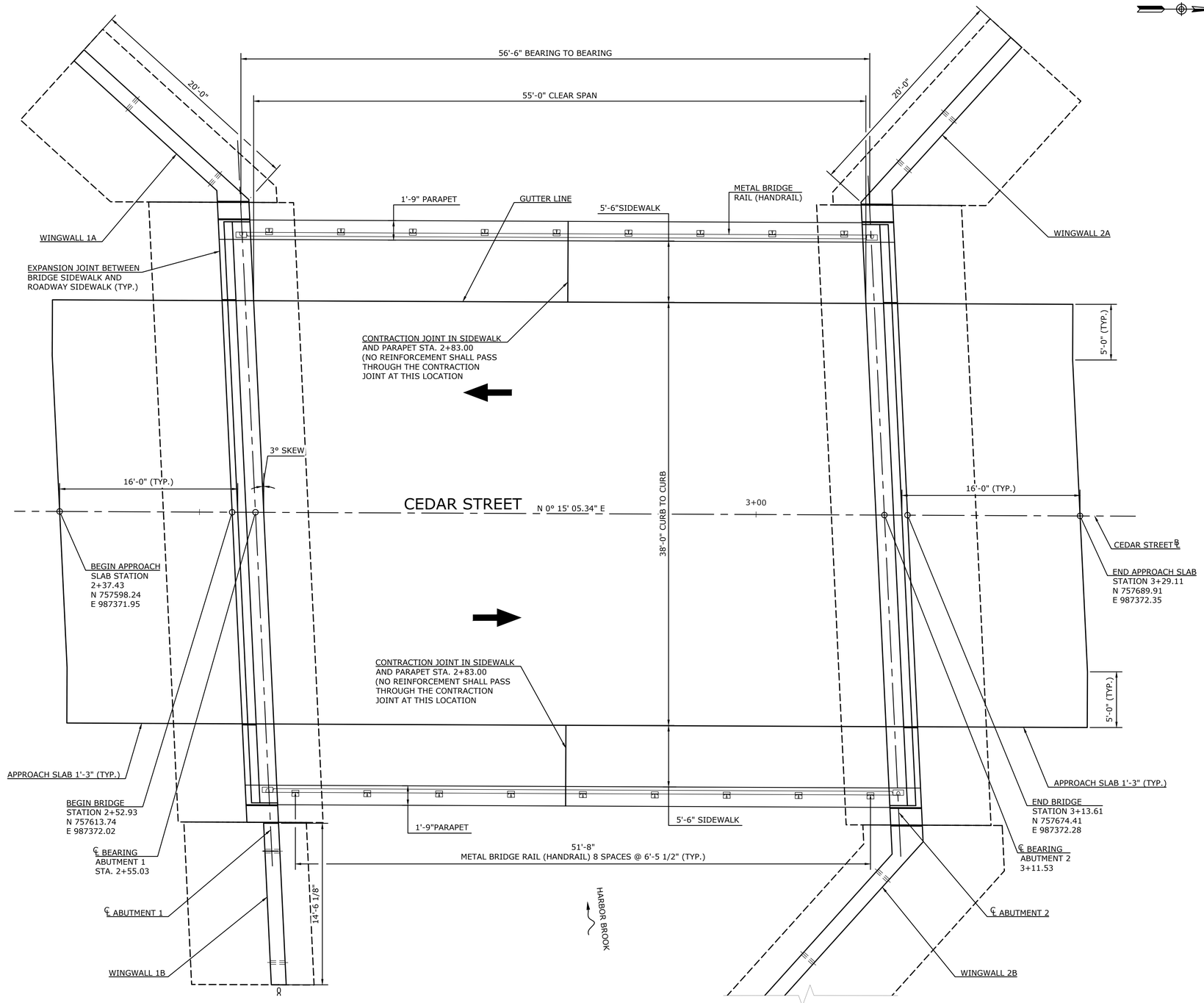

STRUCTURE LAYOUT PLAN

SCALE: 1" = 5'-0"

THE INFORMATION, INCLUDING ESTIMATED QUANTITIES OF WORK SHOWN ON THESE SHEETS IS BASED ON LIMITED INVESTIGATIONS BY THE TOWN AND IS IN NO WAY WARRANTED TO INDICATE THE TRUE CONDITIONS OR ACTUAL QUANTITIES OR DISTRIBUTION OF QUANTITIES OF WORK WHICH WILL BE REQUIRED.

NO.	DATE	DESCRIPTION

REVISIONS

SUPV.	K.O.E.
DESIGN	E.D.
DRAWN	N.S. / S.A.M.
CHECKED	J.A.W.
DATE	09/07/2021

WMC CONSULTING ENGINEERS

• WENGELL, McDONNELL & COSTELLO •
87 HOLMES ROAD
NEWINGTON, CT 06111
(860) 667-9624

PREPARED FOR

CITY OF MERIDEN
142 E MAIN STREET
MERIDEN, CT 06450

REPLACEMENT OF CEDAR STREET
BRIDGE OVER HARBOR BROOK
STRUCTURE LAYOUT PLAN

SIZE	PROJECT	FILE NAME	NUMBER	REV.	SHEET	OF
D	CEDAR STREET	F.D.	17088		22	32

WORKING POINTS		
W.P. #	NORTHING	EASTING
1	757618.59	987414.46
2	757617.90	987399.87
3	757615.83	987372.02
4	757615.24	987343.94
5	757600.43	987330.50

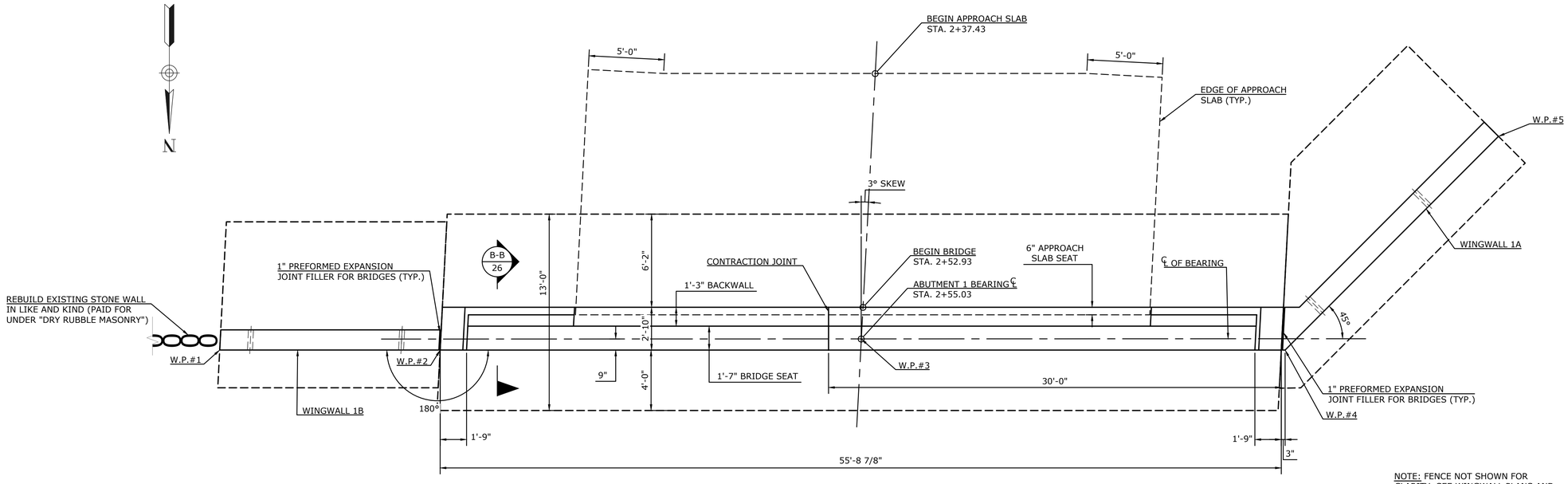

NOTE: FENCE NOT SHOWN FOR CLARITY. SEE WINGWALL PLANS AND ROADWAY PLAN.

ABUTMENT #1 PLAN

SCALE : 1/4" = 1'-0'

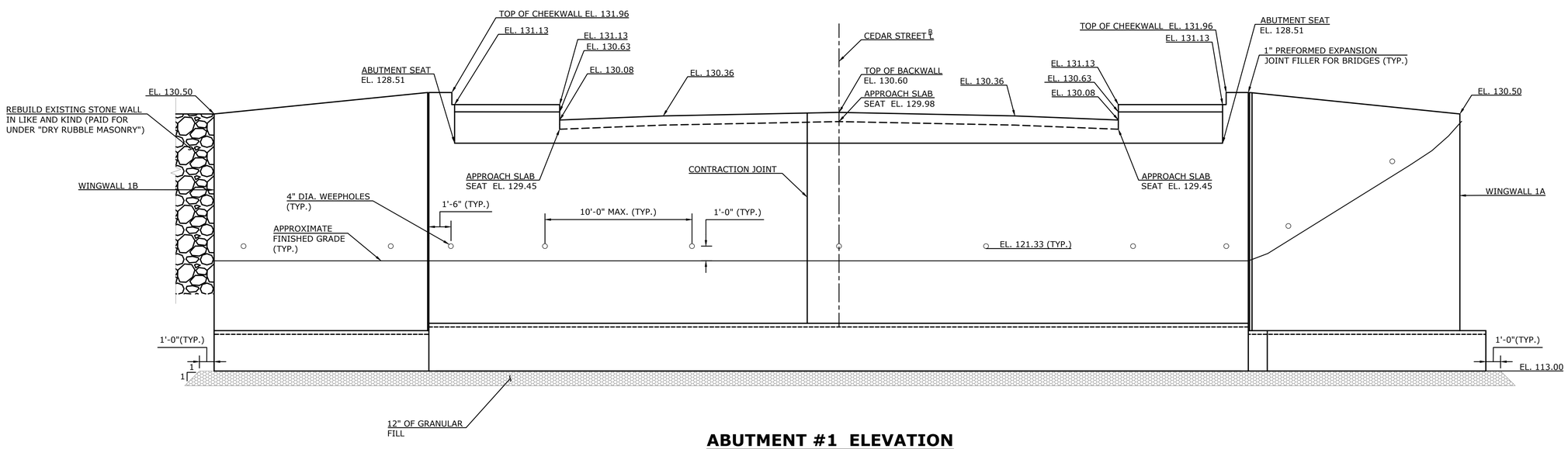

ABUTMENT #1 ELEVATION

SCALE : 1/4" = 1'-0'

THE INFORMATION, INCLUDING ESTIMATED QUANTITIES OF WORK SHOWN ON THESE SHEETS IS BASED ON LIMITED INVESTIGATIONS BY THE TOWN AND IS IN NO WAY WARRANTED TO INDICATE THE TRUE CONDITIONS OR ACTUAL QUANTITIES OR DISTRIBUTION OF QUANTITIES OF WORK WHICH WILL BE REQUIRED.

NO.	DATE	DESCRIPTION

REVISIONS

SUPV.	K.O.E.
DESIGN	E.D.
DRAWN	N.S. / S.A.M.
CHECKED	J.A.W.
DATE	09/07/2021

WMC
CONSULTING ENGINEERS

• WENGELL, McDONNELL & COSTELLO •
87 HOLMES ROAD
NEWINGTON, CT 06111
(860) 667-9624

PREPARED FOR

CITY OF MERIDEN
142 E MAIN STREET
MERIDEN, CT 06450

REPLACEMENT OF CEDAR STREET
BRIDGE OVER HARBOR BROOK
ABUTMENT #1 PLAN AND ELEVATION

SIZE	PROJECT	FILE NAME	NUMBER	REV.	SHEET	OF
D	CEDAR STREET	F.D.	17088		23	32

WORKING POINTS		
W.P. #	NORTHING	EASTING
6	757683.68	987329.38
7	757670.23	987344.18
8	757672.33	987372.27
9	757673.02	987402.72
10	757652.06	987425.99

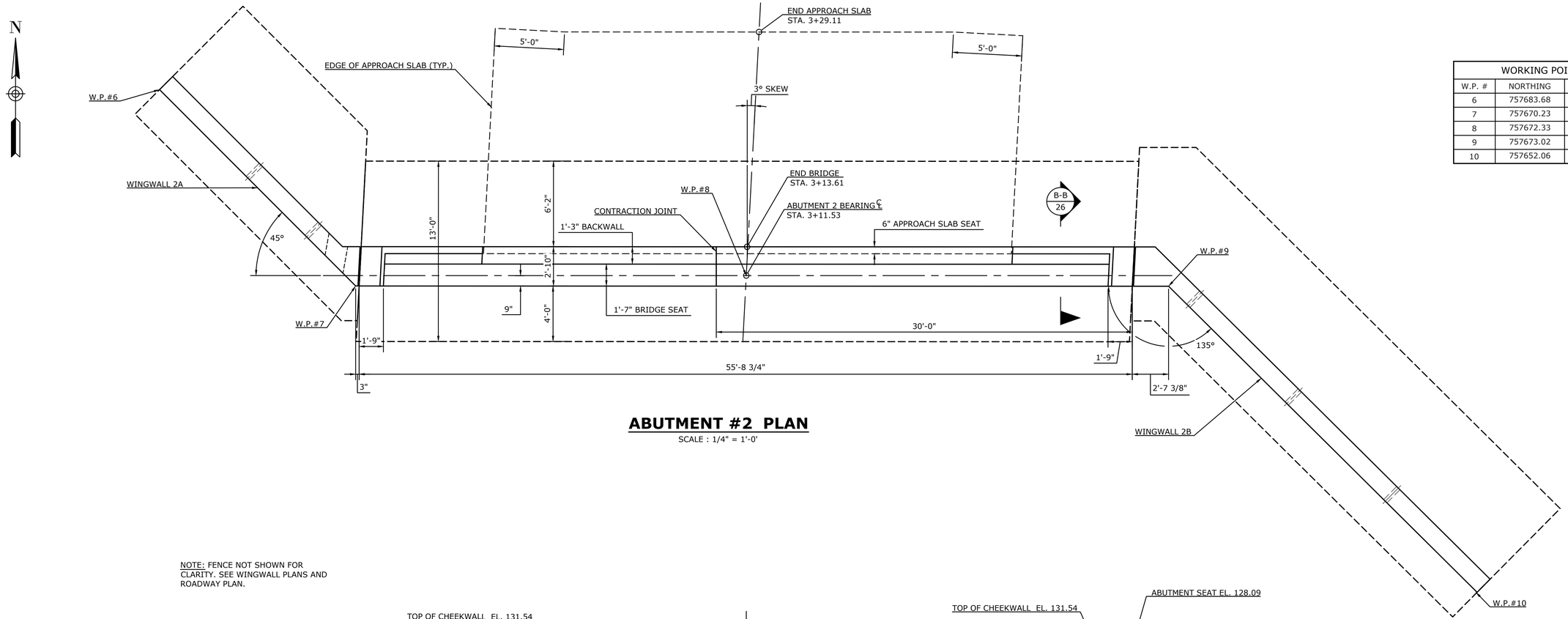

ABUTMENT #2 PLAN

SCALE : 1/4" = 1'-0'

NOTE: FENCE NOT SHOWN FOR CLARITY. SEE WINGWALL PLANS AND ROADWAY PLAN.

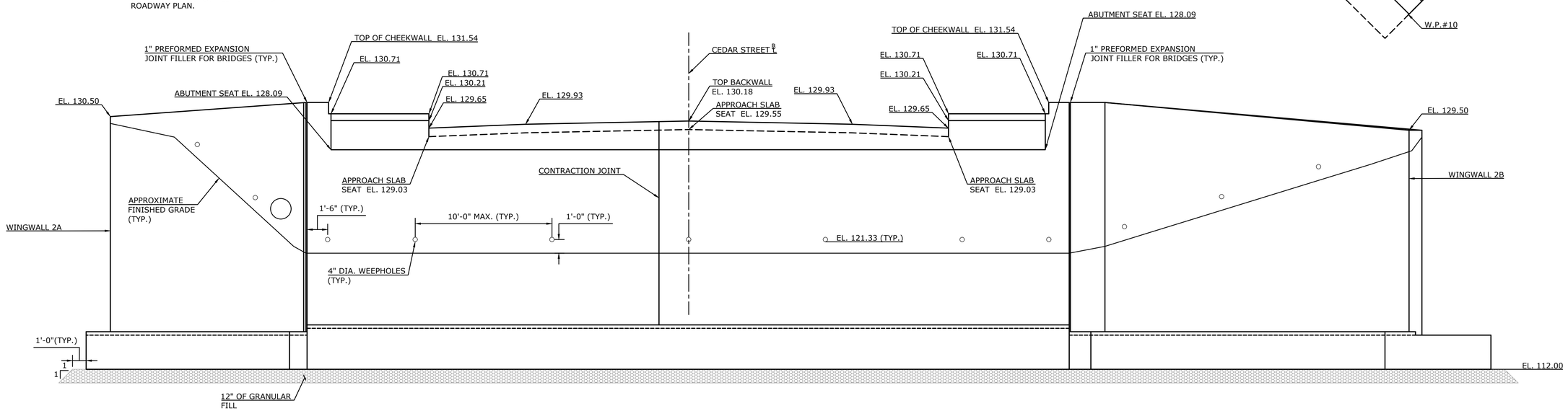

ABUTMENT #2 ELEVATION

SCALE : 1/4" = 1'-0'

THE INFORMATION, INCLUDING ESTIMATED QUANTITIES OF WORK SHOWN ON THESE SHEETS IS BASED ON LIMITED INVESTIGATIONS BY THE TOWN AND IS IN NO WAY WARRANTED TO INDICATE THE TRUE CONDITIONS OR ACTUAL QUANTITIES OR DISTRIBUTION OF QUANTITIES OF WORK WHICH WILL BE REQUIRED.

NO.	DATE	DESCRIPTION

REVISIONS

SUPV.	K.O.E.
DESIGN	E.D.
DRAWN	N.S. / S.A.M.
CHECKED	J.A.W.
DATE	09/07/2021

WMC CONSULTING ENGINEERS

• WENGELL, McDONNELL & COSTELLO •
87 HOLMES ROAD
NEWINGTON, CT 06111
(860) 667-9624

PREPARED FOR

CITY OF MERIDEN
142 E MAIN STREET
MERIDEN, CT 06450

REPLACEMENT OF CEDAR STREET
BRIDGE OVER HARBOR BROOK
ABUTMENT #2 PLAN AND ELEVATION

SIZE	PROJECT	FILE NAME	NUMBER	REV.	SHEET	OF
D	CEDAR STREET	F.D.	17088		24	32

WORKING POINTS			WORKING POINTS		
W.P. #	NORTHING	EASTING	W.P. #	NORTHING	EASTING
1	757618.59	987414.46	6	757683.68	987329.38
2	757617.90	987399.87	7	757670.23	987344.18
4	757615.24	987343.94	9	757673.02	987402.72
5	757600.43	987330.50	10	757652.06	987425.99

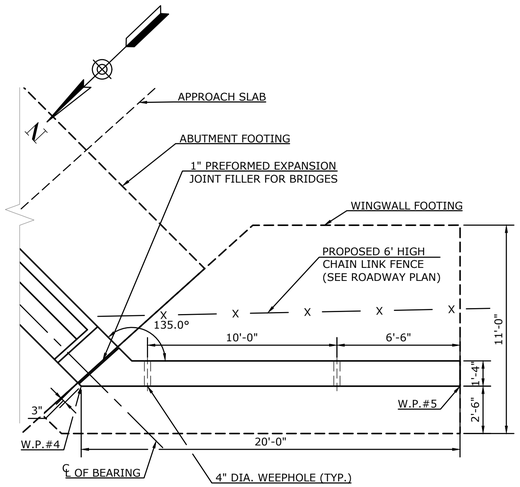

WINGWALL 1A PLAN VIEW

SCALE : 1/4" = 1'-0'

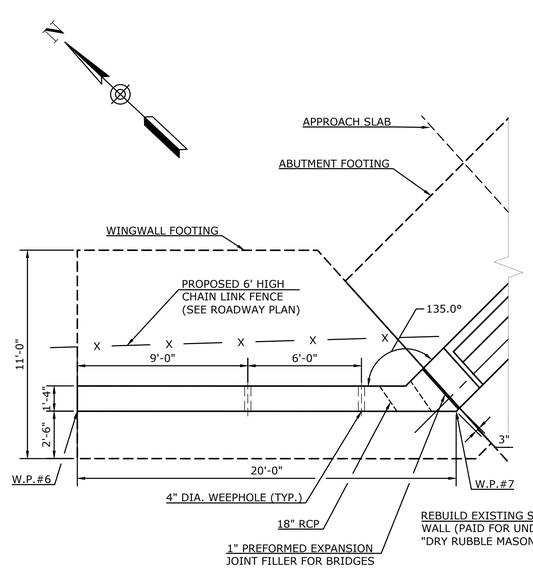

WINGWALL 2A PLAN VIEW

SCALE : 1/4" = 1'-0'

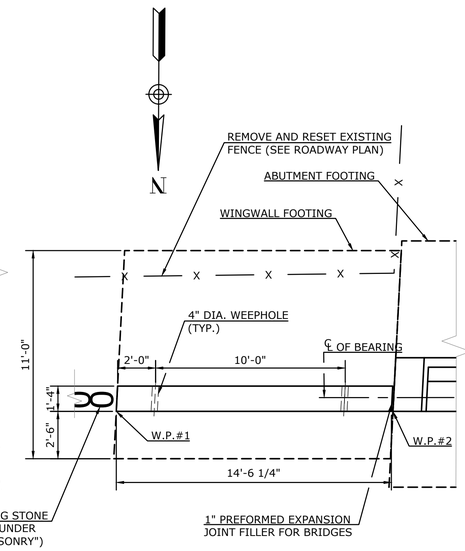

WINGWALL 1B PLAN VIEW

SCALE : 1/4" = 1'-0'

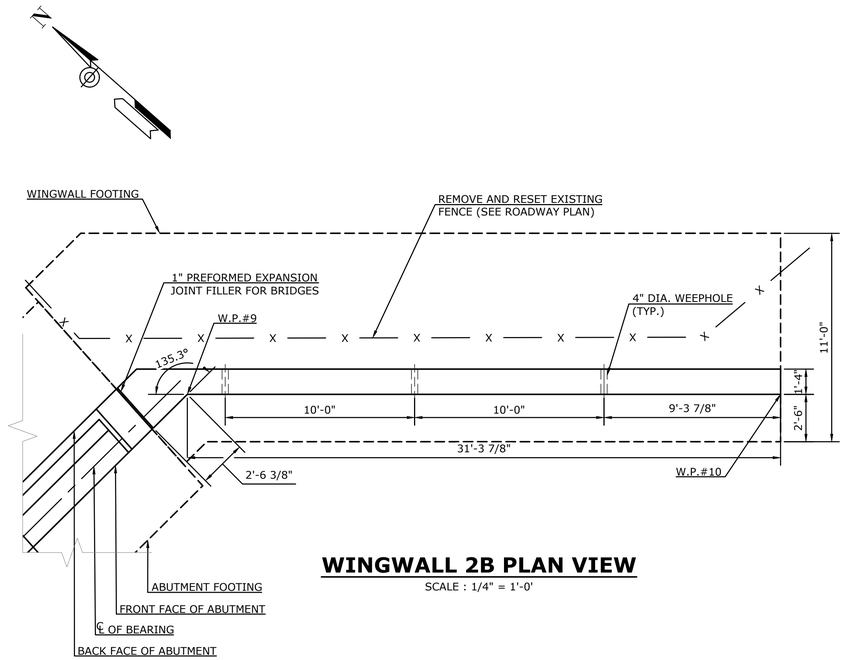

WINGWALL 2B PLAN VIEW

SCALE : 1/4" = 1'-0'

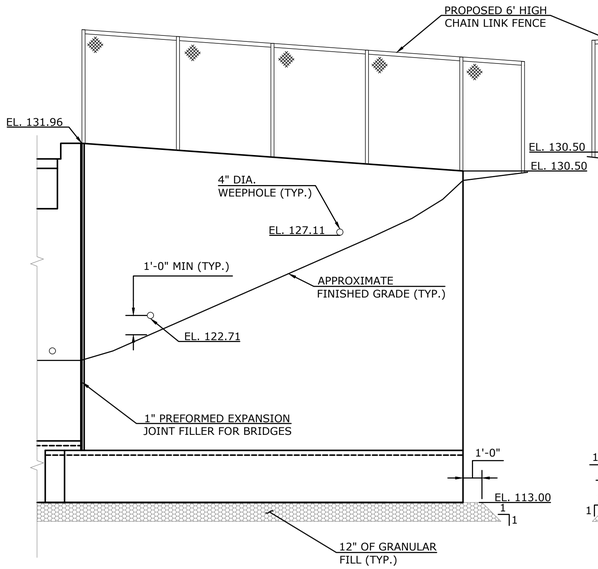

WINGWALL 1A ELEVATION VIEW

SCALE : 1/4" = 1'-0'

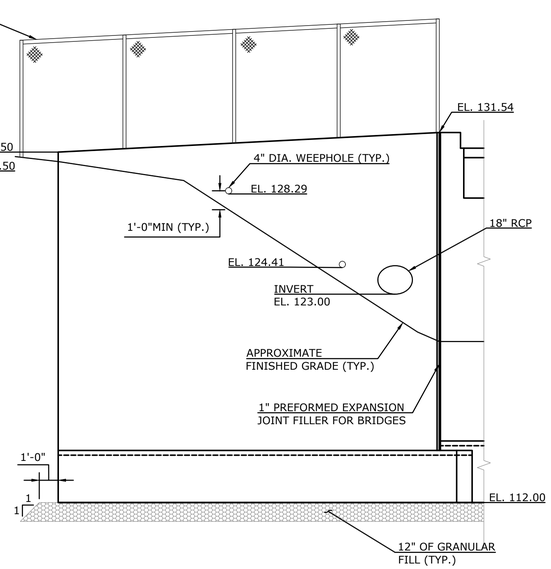

WINGWALL 2A ELEVATION VIEW

SCALE : 1/4" = 1'-0'

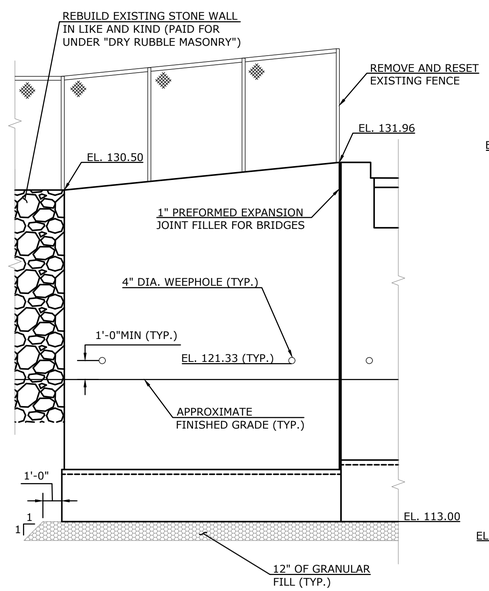

WINGWALL 1B ELEVATION VIEW

SCALE : 1/4" = 1'-0'

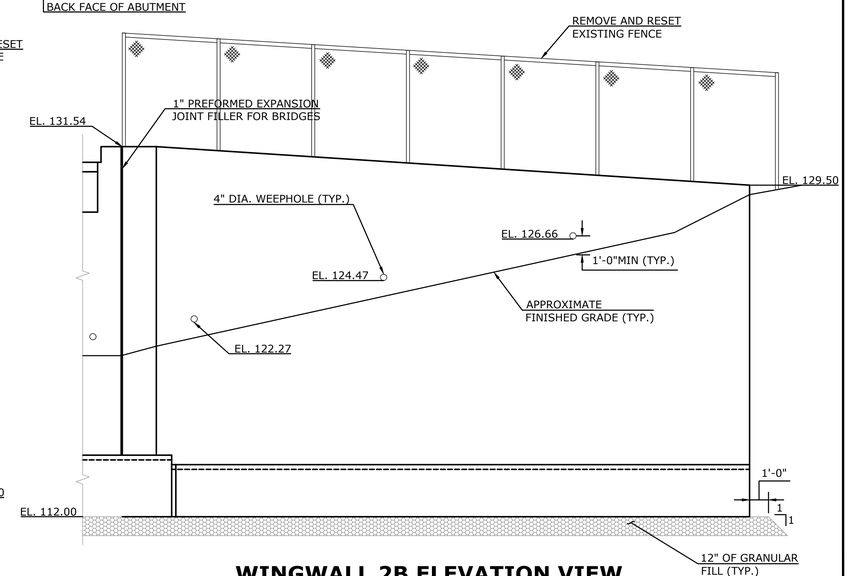

WINGWALL 2B ELEVATION VIEW

SCALE : 1/4" = 1'-0'

THE INFORMATION, INCLUDING ESTIMATED QUANTITIES OF WORK SHOWN ON THESE SHEETS IS BASED ON LIMITED INVESTIGATIONS BY THE TOWN AND IS IN NO WAY WARRANTED TO INDICATE THE TRUE CONDITIONS OR ACTUAL QUANTITIES OR DISTRIBUTION OF QUANTITIES OF WORK WHICH WILL BE REQUIRED.

NO.	DATE	DESCRIPTION

REVISIONS

SUPV.	K.O.E.
DESIGN	E.D.
DRAWN	N.S. / S.A.M.
CHECKED	J.A.W.
DATE	09/07/2021

WMC CONSULTING ENGINEERS

• WENGELL, McDONNELL & COSTELLO •
87 HOLMES ROAD
NEWINGTON, CT 06111
(860) 667-9624

PREPARED FOR

CITY OF MERIDEN
142 E MAIN STREET
MERIDEN, CT 06450

REPLACEMENT OF CEDAR STREET
BRIDGE OVER HARBOR BROOK
WINGWALL PLANS AND ELEVATION

SIZE	PROJECT	FILE NAME	NUMBER	REV.	SHEET	OF
D –	CEDAR STREET –	F.D. –	17088 –		25	32

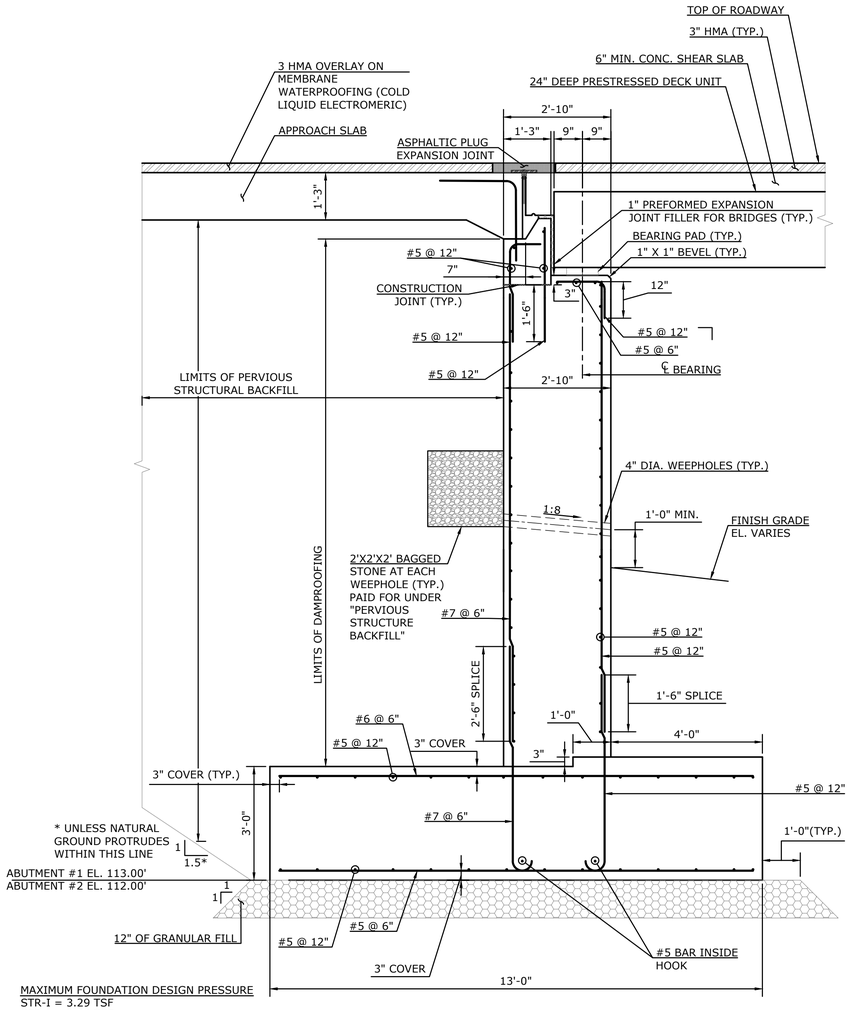

TYPICAL ABUTMENT REINFORCING DETAIL

SCALE : 1/2" = 1'-0"

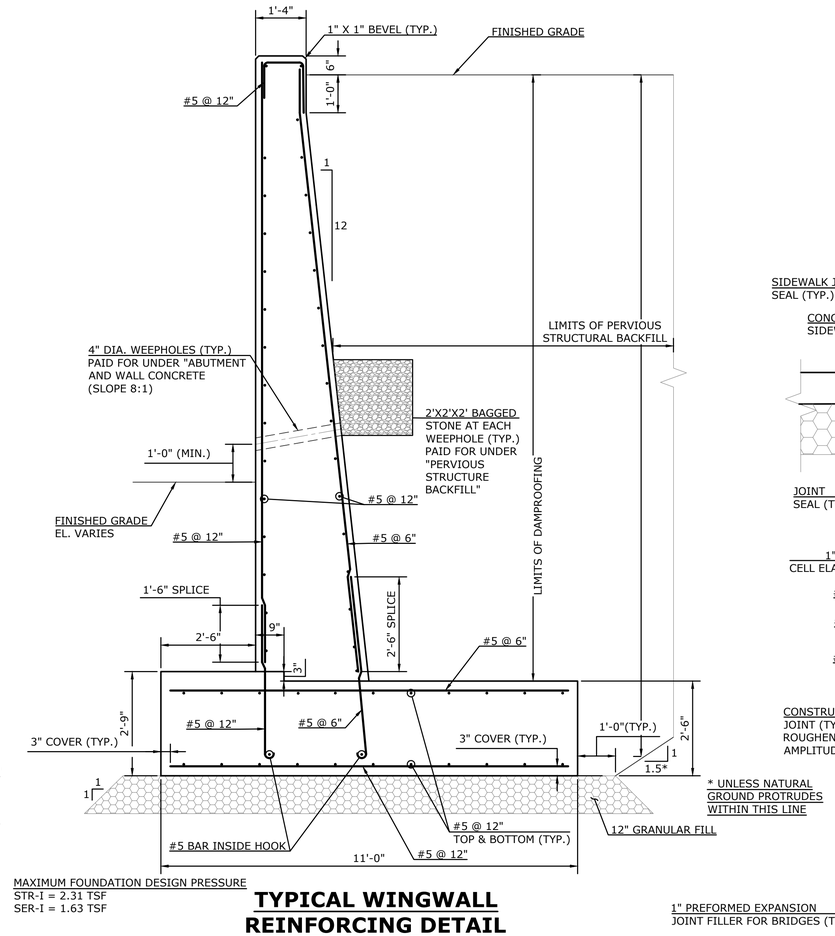

TYPICAL WINGWALL REINFORCING DETAIL

SCALE : 1/2" = 1'-0"

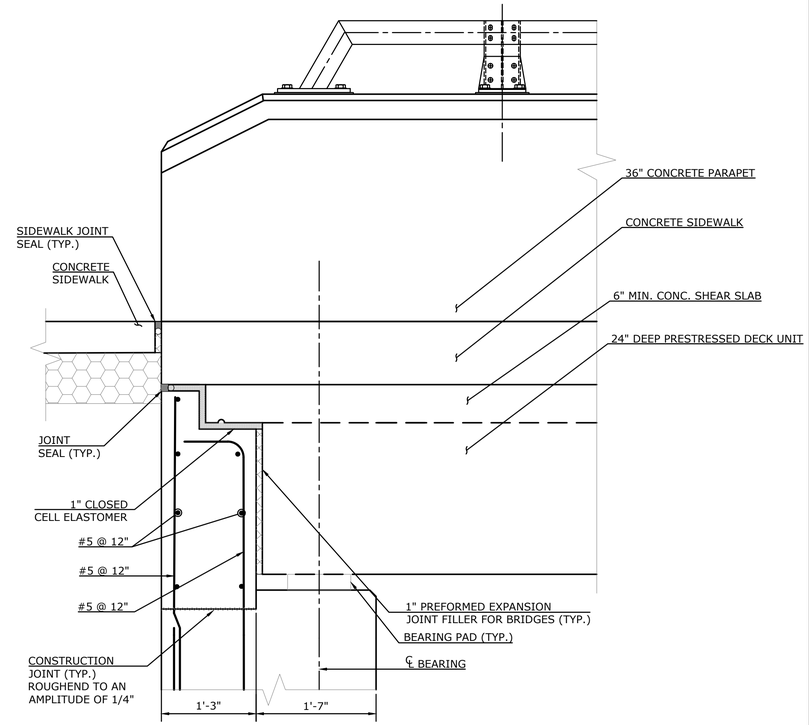

DETAIL AT ABUTMENT-SIDEWALK SECTION B-B

SCALE: 1" = 1'-0"

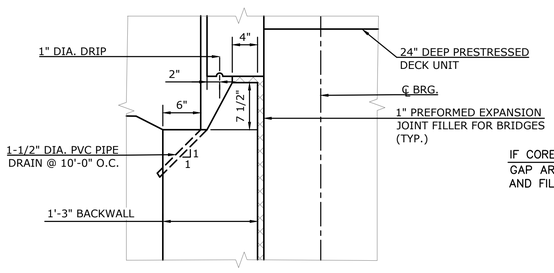

BACKWALL DETAIL

SCALE: 1" = 1'-0"

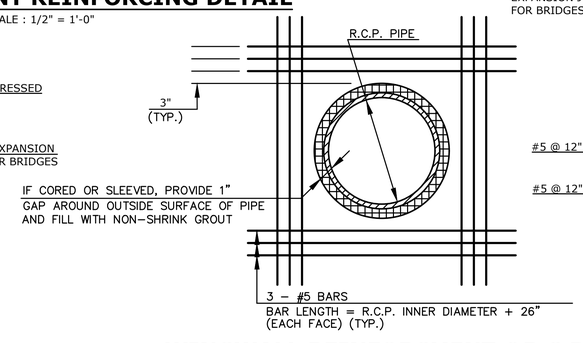

WINGWALL REINFORCMENT @R.C.P. PIPE

SCALE : N.T.S.

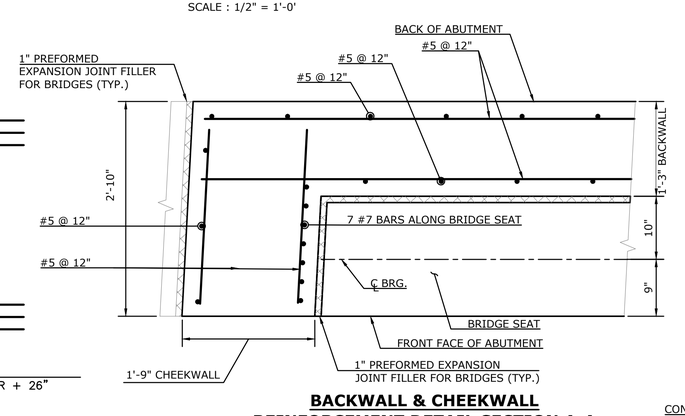

BACKWALL & CHEEKWALL REINFORCEMENT DETAIL SECTION A-A

SCALE: 1" = 1'-0"

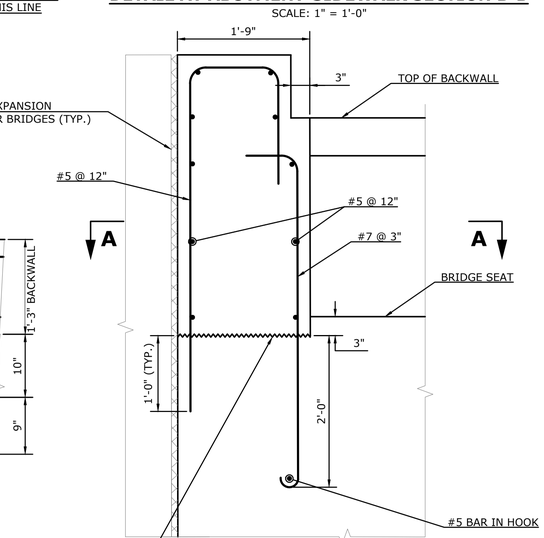

CHEEKWALL REINFORCEMENT DETAIL

SCALE: 1" = 1'-0"

THE INFORMATION, INCLUDING ESTIMATED QUANTITIES OF WORK SHOWN ON THESE SHEETS IS BASED ON LIMITED INVESTIGATIONS BY THE TOWN AND IS IN NO WAY WARRANTED TO INDICATE THE TRUE CONDITIONS OR ACTUAL QUANTITIES OR DISTRIBUTION OF QUANTITIES OF WORK WHICH WILL BE REQUIRED.

NO.	DATE	DESCRIPTION

REVISIONS

SUPV.	K.O.E.
DESIGN	E.D.
DRAWN	N.S. / S.A.M.
CHECKED	J.A.W.
DATE	09/07/2021

WMC CONSULTING ENGINEERS

• WENGELL, McDONNELL & COSTELLO •
87 HOLMES ROAD
NEWINGTON, CT 06111
(860) 667-9624

PREPARED FOR

CITY OF MERIDEN
142 E MAIN STREET
MERIDEN, CT 06450

REPLACEMENT OF CEDAR STREET BRIDGE OVER HARBOR BROOK
ABUTMENT, WINGWALL, BACKWALL DETAILS

SIZE	PROJECT	FILE NAME	NUMBER	REV.	SHEET OF
D –	CEDAR STREET –	F.D. –	17088 –		26 / 32

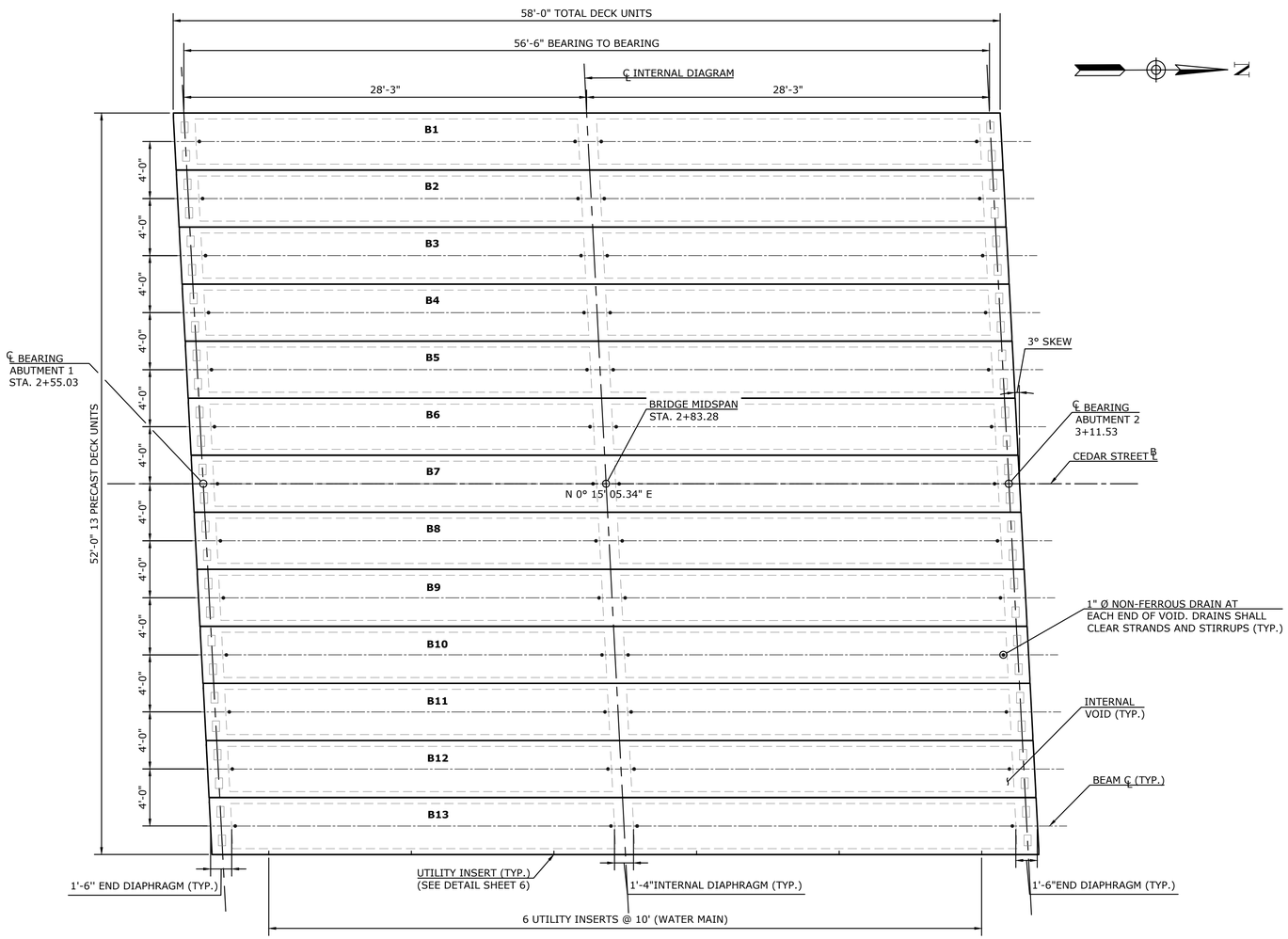

FRAMING PLAN

SCALE : 1" = 5'-0"

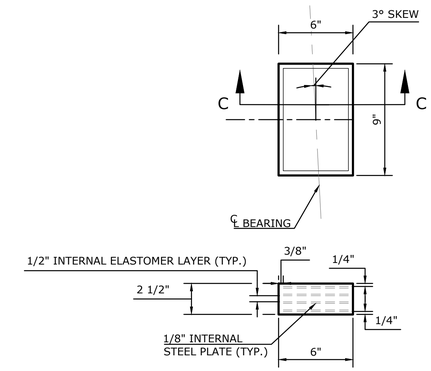

SECTION C-C

TYPICAL STEEL LAMINATED ELASTOMERIC BEARING PAD DETAIL

SCALE: 2" = 1'-0"

BEARING ASSEMBLY NOTES:

1. THE ELASTOMER SHALL BE TYPE CR, GRADE 3 AS DEFINED BY ASTM D4014 AND SHALL HAVE A SHORE A DUROMETER HARDNESS OF 60+/-5 POINTS AND A MINIMUM SHEAR MODULUS OF 160 PSI.

2. THE STEEL LAMINATE SHALL CONFORM TO ASTM A570, GRADE 36 OR 40, ASTM A611, GRADE C OR D OR APPROVED EQUAL. ALL LAMINAE SHALL HAVE 3/8" MINIMUM SIDE COVER.

3. THE STEEL LAMINATE ELASTOMERIC BEARINGS SHALL BE INSTALLED WHEN THE AMBIENT AIR TEMPERATURE IS BETWEEN 41°F AND 77°F AND HAS BEEN WITHIN THIS RANGE FOR MORE THAN TWO HOURS.

4. THE CONCRETE ABUTMENT SEATS SHALL BE CAREFULLY FINISHED SMOOTH TO AN EVEN, LEVEL SURFACE AND SHALL SHOW NO VARIATIONS FROM A TRUE PLANE GREATER THAN 1/16".

5. THE MAXIMUM DESIGN LOAD (DL + LL W/O IMPACT) FOR STEEL LAMINATED ELASTOMERIC BEARING IS 50.72 KIPS.

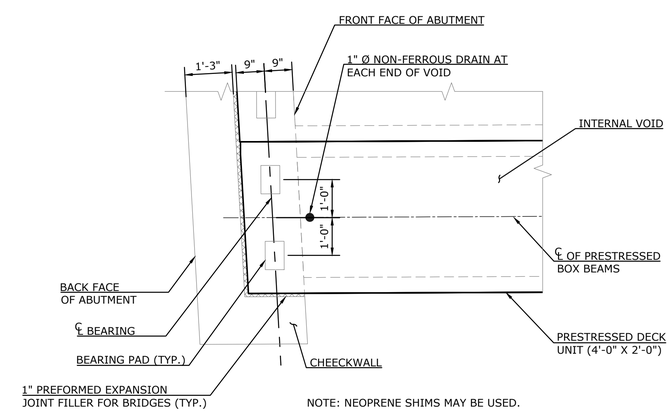

NOTE: NEOPRENE SHIMS MAY BE USED.

ELASTOMERIC BEARING PAD LAYOUT

SCALE : 1" = 2'-0"

THE INFORMATION, INCLUDING ESTIMATED QUANTITIES OF WORK SHOWN ON THESE SHEETS IS BASED ON LIMITED INVESTIGATIONS BY THE TOWN AND IS IN NO WAY WARRANTED TO INDICATE THE TRUE CONDITIONS OR ACTUAL QUANTITIES OR DISTRIBUTION OF QUANTITIES OF WORK WHICH WILL BE REQUIRED.

NO.	DATE	DESCRIPTION

REVISIONS

SUPV.	K.O.E.
DESIGN	E.D.
DRAWN	N.S. / S.A.M.
CHECKED	J.A.W.
DATE	09/07/2021

WMC CONSULTING ENGINEERS

• WENGELL, McDONNELL & COSTELLO •
87 HOLMES ROAD
NEWINGTON, CT 06111
(860) 667-9624

PREPARED FOR

CITY OF MERIDEN
142 E MAIN STREET
MERIDEN, CT 06450

REPLACEMENT OF CEDAR STREET BRIDGE OVER HARBOR BROOK
FRAMING PLAN

SIZE	PROJECT	FILE NAME	NUMBER	REV.	SHEET	OF
D –	CEDAR STREET –	F.D. –	17088 –		27	32

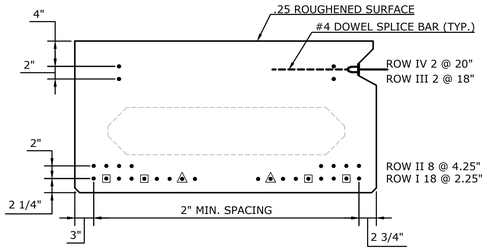

BEAM B1 & B13 STRAND LAYOUT

SCALE : 1" = 1'-0"

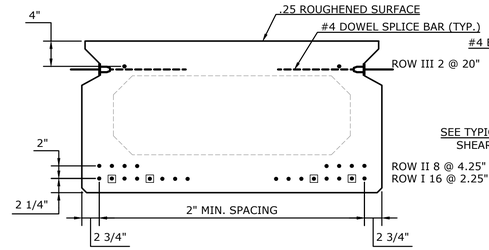

BEAM B2 - B12 STRAND LAYOUT

SCALE : 1" = 1'-0"

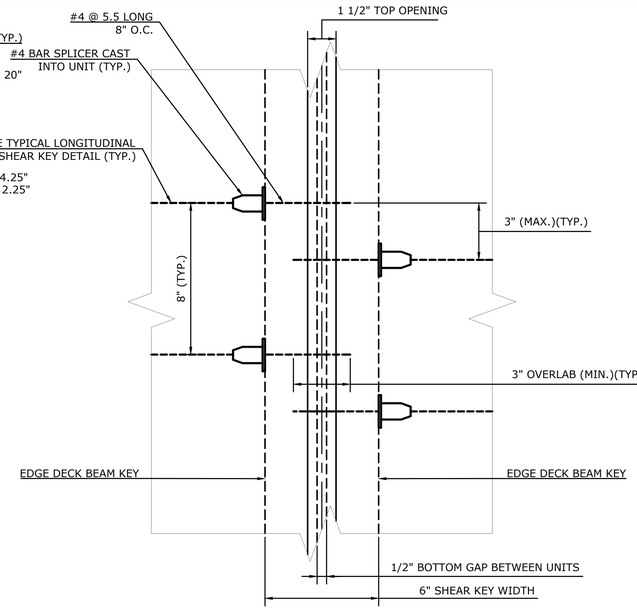

NON-SHRINK GROUT SHEAR KEY PLAN

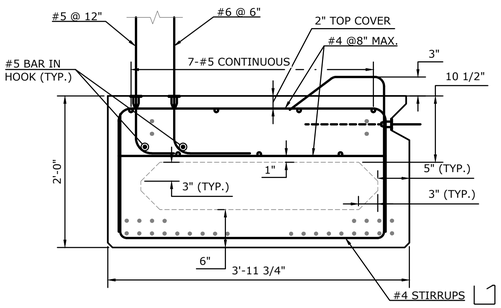

BEAM B1 & B13 DIMENSIONS
(B1 SHOWN - B13 SIMILAR AND REVERSE)

SCALE : 1" = 1'-0"

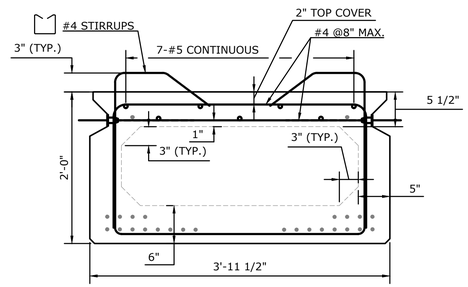

BEAM B2 - B12 DIMENSIONS

SCALE : 1" = 1'-0"

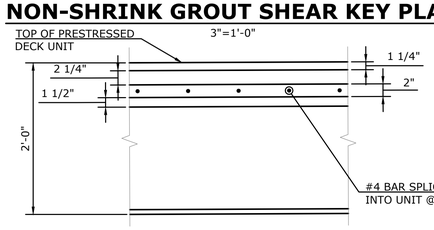

SHEAR KEY FOR PRECAST CONCRETE DECK UNITS

1"=1'-0"

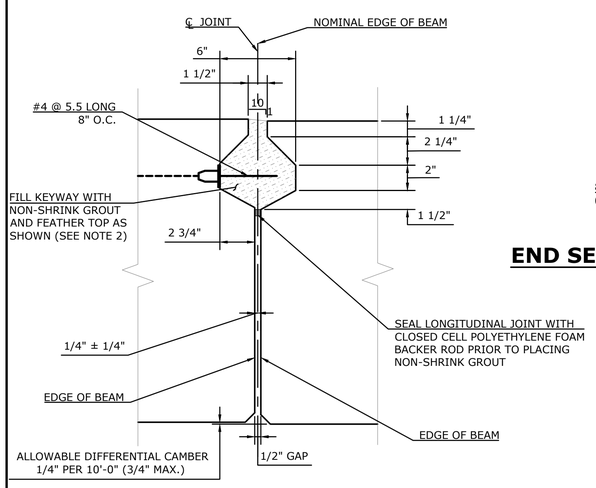

NOTES:

THE BOX BEAMS SHALL BE PLACED AT THE NOMINAL SPACING SHOWN ON THE PLAN WITH A GAP BETWEEN THE UNITS. THE WIDTH OF THE GAPS WILL VARY DUE TO THE SWEEP OF THE UNITS

TYPICAL LONGITUDINAL SHEAR KEY
PRESTRESSED CONCRETE BOX BEAMS

2"=1'-0"

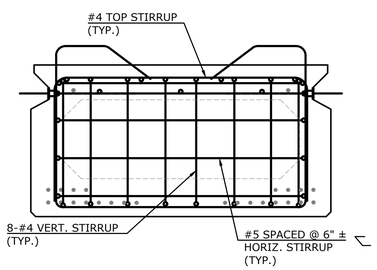

END SECTION FOR BEAM B2 - B12 SHOWN
(B1 & B13 SIMILAR)

SCALE : 1" = 1'-0"

STRAND LEGEND	
•	FULLY BONDED
⊡	DEBONDED 4'-0" FROM ENDS
△	DEBONDED 6'-0" FROM ENDS

STRAND DATA			
MEMBER NUMBER	NUMBER OF STRANDS	C.G. OF STRANDS (INCHES)	
		END (A)	MIDSPAN (B)
B1,B13	30	5.71"	5.02"
B2 - B12	26	4.59"	4.23"

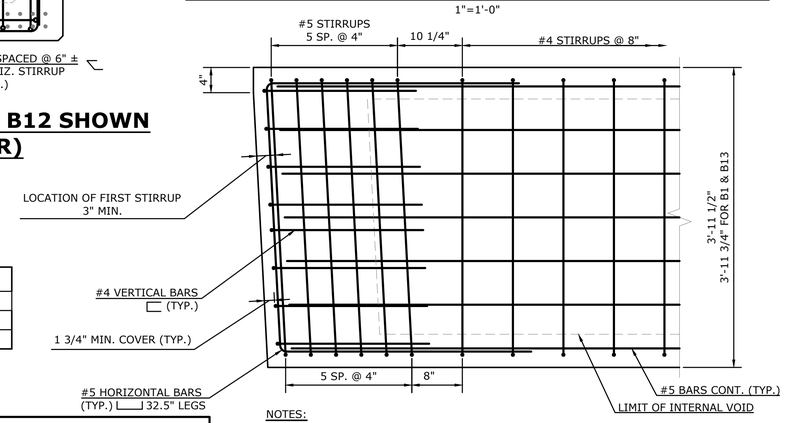

NOTES:

1) EXTEND LONGITUDINAL LEGS OF HORIZONTAL STIRRUPS A MINIMUM DISTANCE EQUAL TO THE DEPTH OF THE BEAM OR 12" INTO THE WEB OF THE VOIDED SECTION, WHICHEVER IS LARGER.

2) HORIZONTAL LEGS OF THE VERTICAL STIRRUPS ARE EQUAL TO THE DEPTH OF THE BEAMS.

REBAR PLAN VIEW B1 - B13
(STRANDS NOT SHOWN FOR CLARITY)

SCALE : 1" = 1'-0"

PRESTRESSED BOX BEAMS NOTES:

1. PRESTRESSED BOX BEAMS SHALL CONFORM TO THE FOLLOWING REQUIREMENTS.
   F'C= 6,500 PSI
   F'CI = 5,000 PSI
2. ALL PRESTRESSED STRANDS SHALL CONFORM TO THE FOLLOWING REQUIREMENTS.
   ULTIMATE STRENGTH (f's) = 270,000 PSI
   JACKING TENSION (FJ) = 43,900 LBS. PER STRAND
3. PRESTRESSED STRANDS SHALL BE PLACED 2" ON CENTERS MINIMUM AND SHALL HAVE A MINIMUM COVER OF 2".
4. THE DRILLING OF HOLES IN PRESTRESSED BOX BEAMS, OR THE USE OF POWER ACTUATED TOOLS ON PRESTRESSED BOX BEAMS WILL NOT BE PERMITTED.
5. ALL PRESTRESSING STRANDS SHALL BE 0.6" DIAMETER, UNCOATED SEVEN WIRE, LOW RELAXATION STRANDS CONFORMING TO AASHTO M203 (ASTM DESIGNATION A416).
6. FURNISHING AND INSTALLING ALL BOX BEAM REINFORCEMENT SHALL BE INCLUDED IN THE COST OF THE PRESTRESSED BOX BEAM UNDER THE ITEM "PRESTRESSED DECK UNITS (4'-0" X 2'-0")".
7. ALL NON-PRESTRESSED REINFORCING BARS SHALL BE GALVANIZED AND SHALL CONFORM TO THE REQUIREMENTS OF ASTM A615, GRADE 60, AFTER FABRICATION, TO THE REQUIREMENTS OF ASTM A 767, CLASS 1, INCLUDING SUPPLEMENTAL REQUIREMENTS. BARS SHALL BE SECURELY TIED TO PREVENT DISLOCATION. ALL TIES SHALL BE GALVANIZED. ENDS OF TIE WIRES SHALL BE TURNED INWARD, AWAY FROM SURFACES.
8. PRECAST MANUFACTURING PLANT FURNISHING PRECAST PRESTRESSED BRIDGE MEMBERS SHALL BE CERTIFIED BY THE PRECAST PRESTRESSED CONCRETE INSTITUTE PLANT CERTIFICATION PROGRAM. THE CERTIFICATION SHALL BE AS A MINIMUM IN THE B3 CATEGORY. THE MANUFACTURER SHALL SUBMIT PROOF OF CERTIFICATION PRIOR TO THE START OF PRODUCTION.
9. TOLERANCES FOR PRESTRESSED MEMBERS SHALL CONFORM TO THE LIMITS SPECIFIED IN THE "MANUAL FOR QUALITY CONTROL FOR PLANS AND PRODUCTION OF PRECAST PRESTRESSED CONCRETE PRODUCTS".
10. PROPER BEAM HANDLING HOOKS LOCATED ON THE TOP OF THE PRESTRESSED BOX BEAMS SHALL BE PROVIDED BY THE FABRICATOR. THE FABRICATOR SHALL CONSIDER THE LOCATION OF THE CENTER OF GRAVITY. DURING HANDLING, THE BEAMS MUST BE MAINTAINED IN AN UPRIGHT POSITION AT ALL TIMES AND MUST BE PICKED UP ONLY BY MEANS OF APPROVED LIFTING DEVICES AT THEIR APPROVED SUPPORT POINTS.
11. ANY STRUCTURAL MEMBERS DAMAGED DURING FABRICATION, SHIPPING OR ERECTION, SUCH THAT THEIR STRUCTURAL INTEGRITY IS COMPROMISED, SHALL BE REJECTED AND REPLACED AT THE CONTRACTORS'S OWN EXPENSE. THE ENGINEER SHALL BE THE SOLE JUDGE IN DETERMINING THE STRUCTURAL INTEGRITY OF DAMAGED PRESTRESSED MEMBERS.
12. INSERTS, ANCHORS AND ANY OTHER ITEMS REQUIRED TO BE CAST INTO THE BOX BEAMS SHALL BE SHOWN ON THE SHOP DRAWINGS. ALL HARDWARE SHALL BE GALVANIZED.
13. NO ADDITIONAL DEAD LOADS OR LIVE LOADS SHALL BE APPLIED TO THE PRESTRESSED BOX BEAMS UNTIL THE GROUT IN THE LONGITUDINAL SHEAR KEYS HAS REACHED A SEVEN-DAY COMPRESSIVE STRENGTH OF 4500 PSI. NO ADDITIONAL DEAD LOADS OR LIVE LOADS SHALL BE APPLIED TO THE PRESTRESSED BOX BEAMS UNTIL THE CAST-IN-PLACE DECK SLAB HAS REACHED A MINIMUM 28 DAY COMPRESSIVE STRENGTH OF 4,000 PSI.
14. GROUT FOR SHEAR KEYS SHALL BE RODDED OR VIBRATED TO ENSURE THAT ALL VOIDS IN THE SHEAR KEY ARE FILLED.
15. TOPS OF BEAMS ARE TO BE INTENTIONALLY ROUGHENED (RAKED FINISH) TO PROVIDE ADEQUATE CONTACT SURFACE WITH THE CONCRETE SHEAR SLAB.
16. THE PRESTRESSED BOX BEAMS SHALL BE PLACED AT THE NOMINAL SPACING SHOWN ON THE PLANS WITH A 1/2" WIDE GAP BETWEEN THE BEAMS. THE WIDTH OF THIS GAP CAN VARY DUE TO SWEEP OF THE UNITS.

NON-SHRINK GROUT SHEAR KEY NOTES:

1. NON-SHRINK GROUT SHALL CONFORM TO THE FOLLOWING:
   F'C = 6,000 PSI
2. SHEAR KEYS TO BE FILLED WITH NON-SHRINK GROUT SHALL BE ROUGHENED AND CLEANED PRIOR TO DECK UNIT PLACEMENT.
3. SECURE #4 SPLICE BARS TO DECK UNIT AFTER ROUGHENING CONCRETE BUT PRIOR TO DECK UNIT PLACEMENT.
4. AFTER FINAL DECK UNIT PLACEMENT, SHEAR KEYS SHALL BE FILLED WITH NON-SHRINK GROUT IN ONE CONTINUOUS POUR PER KEY.
5. IF THE TOP SURFACES OF THE ADJACENT DECK UNITS DO NOT MATCH, THE GROUT SHALL BE SLOPED FOR A SMOOTH TRANSITION.
6. GRIND ANY NON-SHRINK GROUT OVER FLOW FLUSH AFTER CURING.
7. NON-SHRINK GROUT TO BE PAID FOR UNDER ITEMS "PRESTRESSED DECK UNITS (4'-0" X 2'-0").

CAMBER TABLE				
MEMBER NUMBER	ESTIMATED CAMBER AT MIDSPAN			
	AT TRANSFER	AT ERECTION	TOTAL CAMBER	FINAL
	CAMBER DUE TO PRETENSIONING FORCE AT TRANSFER MINUS THE DEFLECTION DUE TO THE DEAD LOAD OF THE MEMBER.	CAMBER (DUE TO PRETENSIONING FORCE AT TRANSFER MINUS DEFLECTION DUE TO THE DEAD LOAD OF THE MEMBER) APPROXIMATELY 30 DAYS AFTER TRANSFER.	CAMBER AFTER ALL DEAD LOADS ARE APPLIED TO THE STRUCTURE.	CAMBER AFTER ALL DEAD LOADS ARE APPLIED TO THE STRUCTURE, AND AFTER LONG TERM CREEP AND RELAXATION HAVE TAKEN PLACE
B1	1.366"	2.411"	1.759"	1.054"
B2 - B12	1.323"	2.341"	1.673"	.941"
B13	1.366"	2.411"	1.626"	.656"

THE INFORMATION, INCLUDING ESTIMATED QUANTITIES OF WORK SHOWN ON THESE SHEETS IS BASED ON LIMITED INVESTIGATIONS BY THE TOWN AND IS IN NO WAY WARRANTED TO INDICATE THE TRUE CONDITIONS OR ACTUAL QUANTITIES OR DISTRIBUTION OF QUANTITIES OF WORK WHICH WILL BE REQUIRED.

NO.	DATE	DESCRIPTION

REVISIONS

SUPV.	K.O.E.
DESIGN	E.D.
DRAWN	N.S. / S.A.M.
CHECKED	J.A.W.
DATE	09/07/2021

WMC CONSULTING ENGINEERS
• WENGELL, McDONNELL & COSTELLO •
87 HOLMES ROAD
NEWINGTON, CT 06111
(860) 667-9624

PREPARED FOR
CITY OF MERIDEN
142 E MAIN STREET
MERIDEN, CT 06450

REPLACEMENT OF CEDAR STREET
BRIDGE OVER HARBOR BROOK
PRESTRESSED DECK UNITS

SIZE	PROJECT	FILE NAME	NUMBER	REV.	SHEET OF
D	CEDAR STREET	F.D.	17088		28 / 32

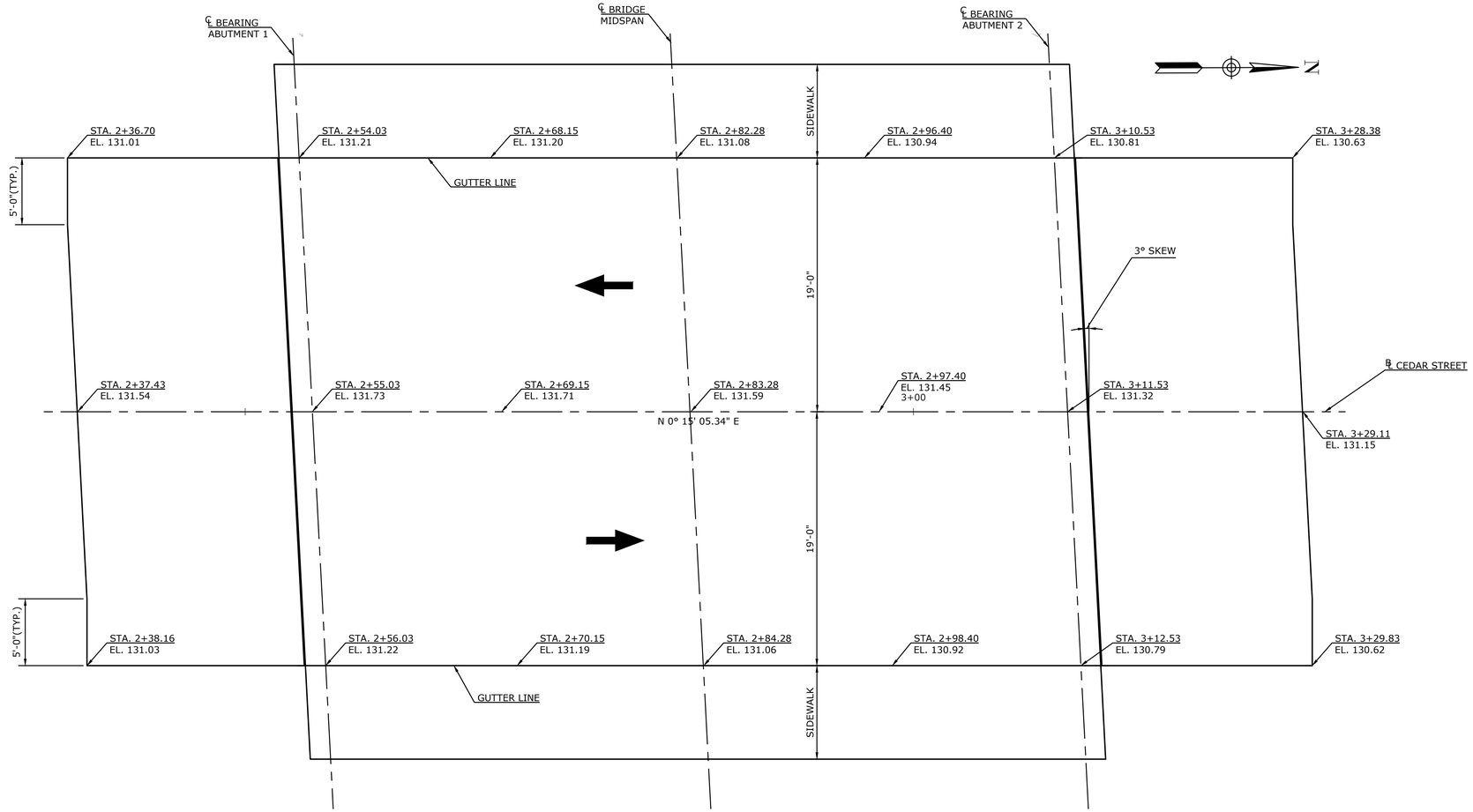

NOTES:

ALL ELEVATIONS GIVEN ARE FOR THE TOP OF CONCRETE SHEAR SLAB OR TOP OF APPROACH SLAB

FLOW

DECK SLAB PLAN

SCALE : 1" = 5'-0"

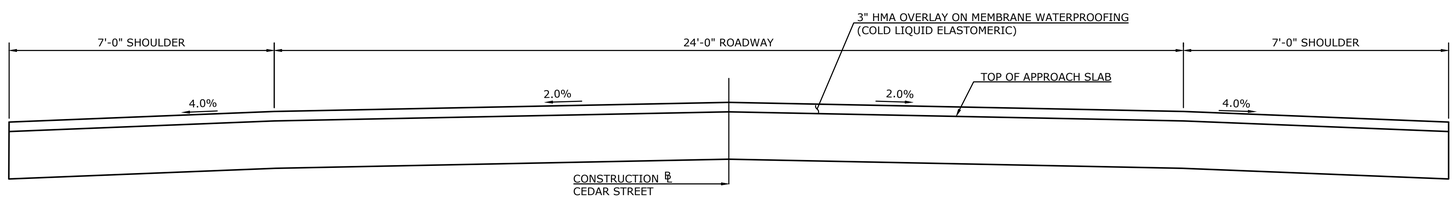

TYPICAL APPROACH SLAB SECTION

SCALE: 1/2" = 1'-0"

THE INFORMATION, INCLUDING ESTIMATED QUANTITIES OF WORK SHOWN ON THESE SHEETS IS BASED ON LIMITED INVESTIGATIONS BY THE TOWN AND IS IN NO WAY WARRANTED TO INDICATE THE TRUE CONDITIONS OR ACTUAL QUANTITIES OR DISTRIBUTION OF QUANTITIES OF WORK WHICH WILL BE REQUIRED.

NO.	DATE	DESCRIPTION

REVISIONS

SUPV.	K.O.E.
DESIGN	E.D.
DRAWN	N.S. / S.A.M.
CHECKED	J.A.W.
DATE	09/07/2021

WMC
CONSULTING ENGINEERS

• WENGELL, McDONNELL & COSTELLO •
87 HOLMES ROAD
NEWINGTON, CT 06111
(860) 667-9624

PREPARED FOR

CITY OF MERIDEN
142 E MAIN STREET
MERIDEN, CT 06450

REPLACEMENT OF CEDAR STREET
BRIDGE OVER HARBOR BROOK
DECK SLAB PLAN

SIZE	PROJECT	FILE NAME	NUMBER	REV.	SHEET	OF
D	CEDAR STREET	F.D.	17088		29	32

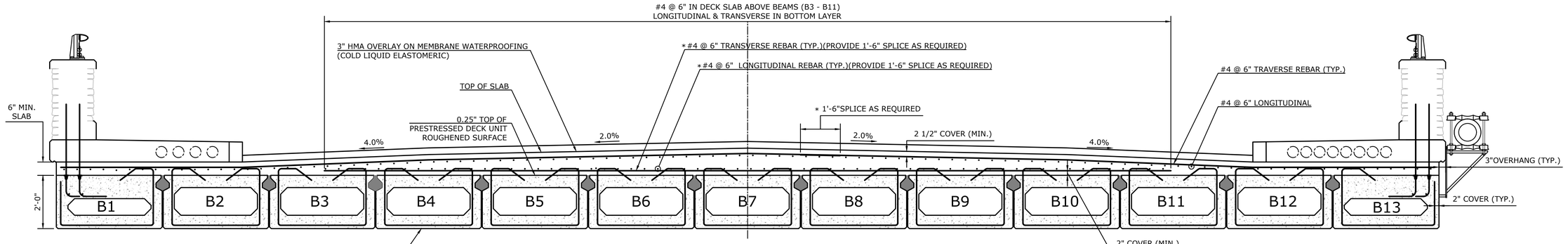

DECK SLAB REINFORCEMENT DETAIL

SCALE: 1/2" = 1'-0"

* NOTE
REBAR SPLICES SHALL BE STAGGERED.

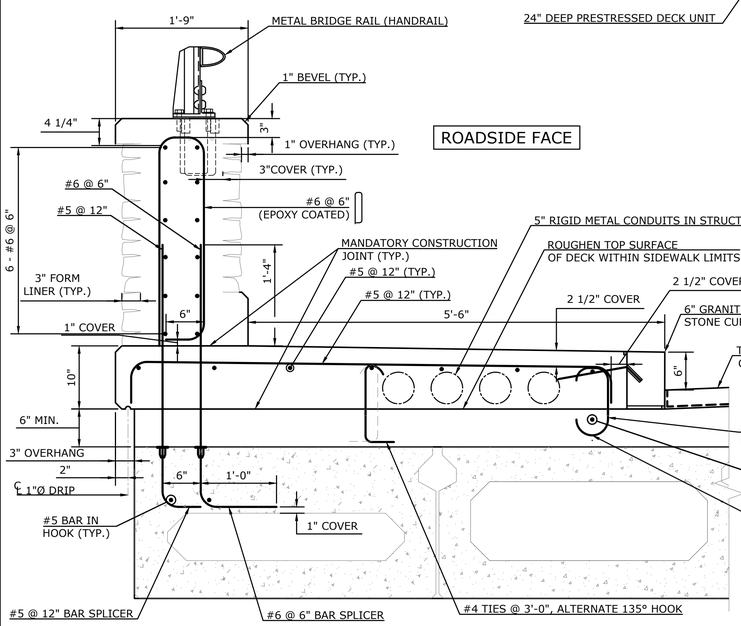

NOTE: DECK REINFORCEMENT NOT SHOWN FOR CLARITY.

PARAPET AND SIDEWALK REINFORCMENT DETAIL

SCALE: 1" = 1'-0"

GRANITE STONE CURBING TOLERANCE NOTES:

1. SAWED SURFACE APPROXIMATING A TRUE PLANE WITH NO PROJECTIONS OR DEPRESSIONS GREATER THAN 1/4".
2. SMOOTH, QUARRY SPLIT SURFACE, FREE OF DRILL HOLES, WITH PROJECTIONS OR DEPRESSIONS NOT GREATER THAN 1/2".
3. NO PROJECTIONS OR DEPRESSIONS GREATER THAN 1/4" IN THIS AREA.
4. SPLIT SURFACE SHALL BE FREE OF ANY PROJECTIONS OVER 1".
5. SAWED OR SPLIT SURFACE APPROXIMATING A TRUE PLANE TO THE SPECIFIED DIMENSIONS WITH PROJECTIONS NOT GREATER THAN 1/4".
6. THESE ARRIS LINES SHALL BE STRAIGHT AND TRUE WITHIN A TOLERANCE OF 1/4".
7. ENDS OF STONES AT INTERMEDIATE JOINTS SHALL BE HELD FULL FOR 2" FROM ALL EXPOSED SURFACES WITH A PERMITTED VARIATION OF 1/4". BEYOND THIS AREA THE JOINT MAY FALL AWAY A MAX. OF 3".

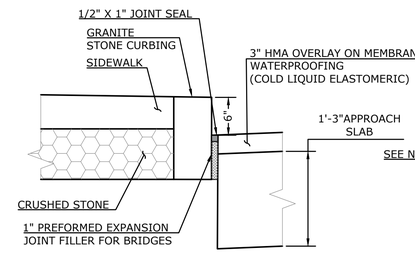

SIDEWALK WITH APPROACH SLAB DETAIL

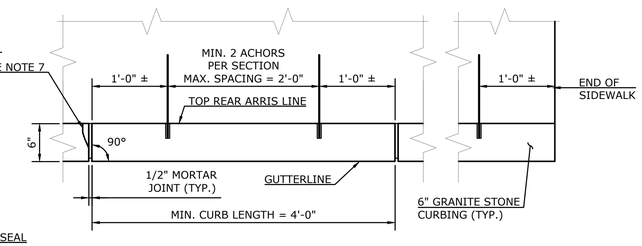

PLAN

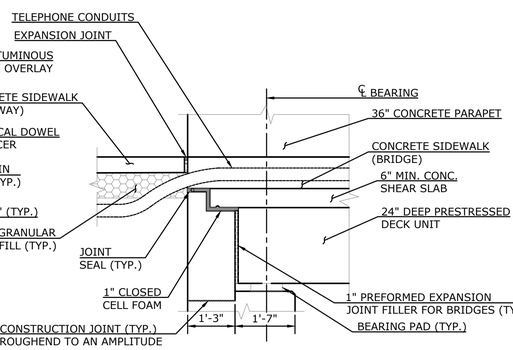

TELEPHONE CONDUITS TRANSITION

SCALE: 1/2" = 1'-0"

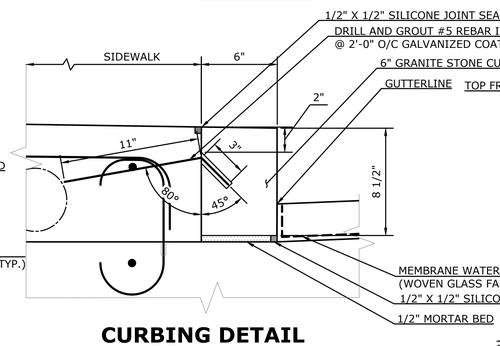

CURBING DETAIL

SCALE: 2" = 1'

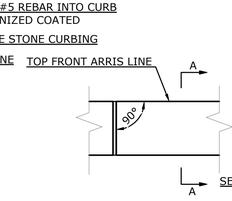

ELEVATION

(N.T.S)

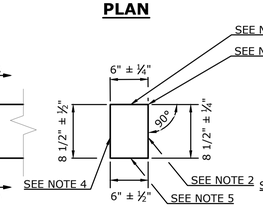

MIN. CURB DIMENTIONS SECTION A-A

(N.T.S)

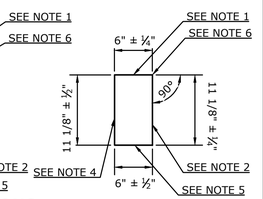

MAX. CURB DIMENTIONS SECTION A-A

(N.T.S)

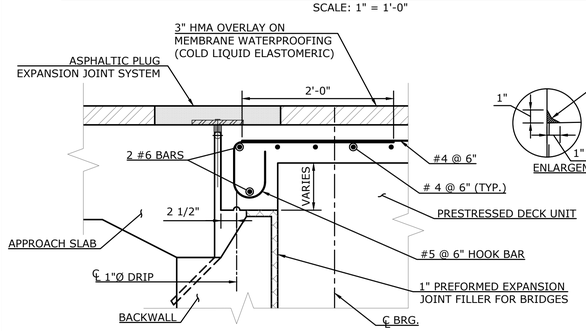

DECK SLAB AT BACKWALL REINFORCEMENT DETAIL

SCALE: 1" = 1'-0"

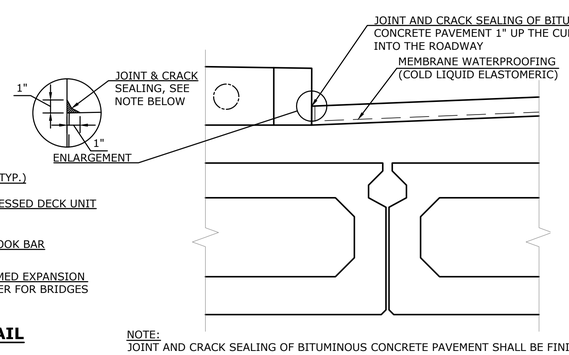

NOTE:
JOINT AND CRACK SEALING OF BITUMINOUS CONCRETE PAVEMENT SHALL BE FINISHED OR STRUCK OFF WITH A SMALL "V" SHAPED SQUEEGEE DESIGNED TO STRIKE OFF CRACK SEALANT.

MEMBRANE WATERPROOFING CURB DETAIL

SCALE: 1" = 1'-0"

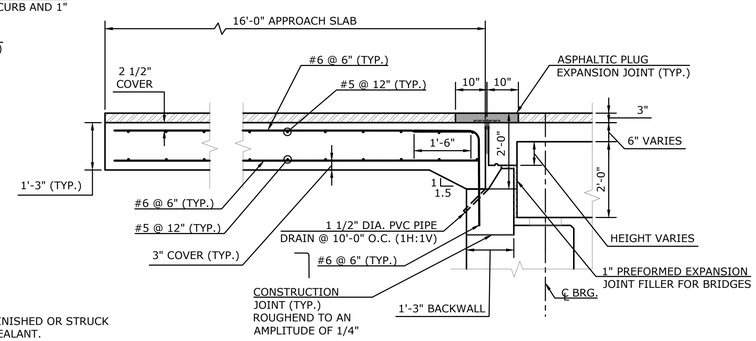

APPROACH SLAB REINFORCEMENT DETAIL

SCALE: 1/2" = 1'-0"

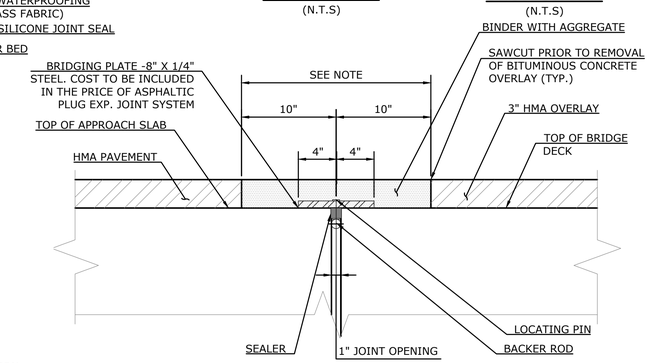

NOTE
REMOVE NEW BITUMINOUS CONCRETE OVERLAY AND MEMBRANE WATERPROOFING. REPLACE WITH ASPHALTIC PLUG EXPANSION JOINT SYSTEM. TO BE PAID FOR UNDER THE ITEM "ASPHALTIC PLUG EXPANSION JOINT SYSTEM". (SEE SPECIAL PROVISION)

ASPHALTIC PLUG EXPANSION JOINT DETAIL

SCALE: 1-1/2" = 1'-0"

THE INFORMATION, INCLUDING ESTIMATED QUANTITIES OF WORK SHOWN ON THESE SHEETS IS BASED ON LIMITED INVESTIGATIONS BY THE TOWN AND IS IN NO WAY WARRANTED TO INDICATE THE TRUE CONDITIONS OR ACTUAL QUANTITIES OR DISTRIBUTION OF QUANTITIES OF WORK WHICH WILL BE REQUIRED.

NO.	DATE	DESCRIPTION

REVISIONS

SUPV.	K.O.E.
DESIGN	E.D.
DRAWN	N.S. / S.A.M.
CHECKED	J.A.W.
DATE	09/07/2021

WMC CONSULTING ENGINEERS

• WENGELL, McDONNELL & COSTELLO •
87 HOLMES ROAD
NEWINGTON, CT 06111
(860) 667-9624

PREPARED FOR

CITY OF MERIDEN
142 E MAIN STREET
MERIDEN, CT 06450

REPLACEMENT OF CEDAR STREET BRIDGE OVER HARBOR BROOK MISCELLANEOUS STRUCTURE DETAILS

SIZE	PROJECT	FILE NAME	NUMBER	REV.	SHEET OF
D –	CEDAR STREET –	F.D. –	17088 –		30 OF 32

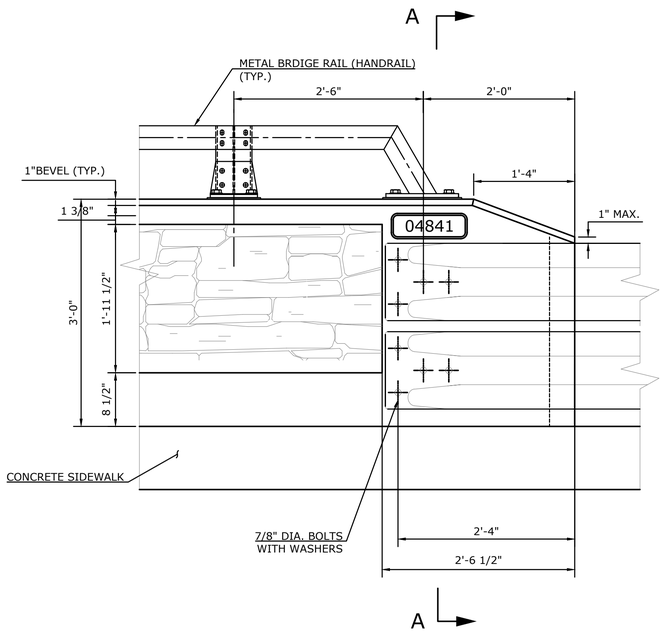

ELEVATION VIEW ROADSIDE FACE

SCALE: 1" = 1'-0"

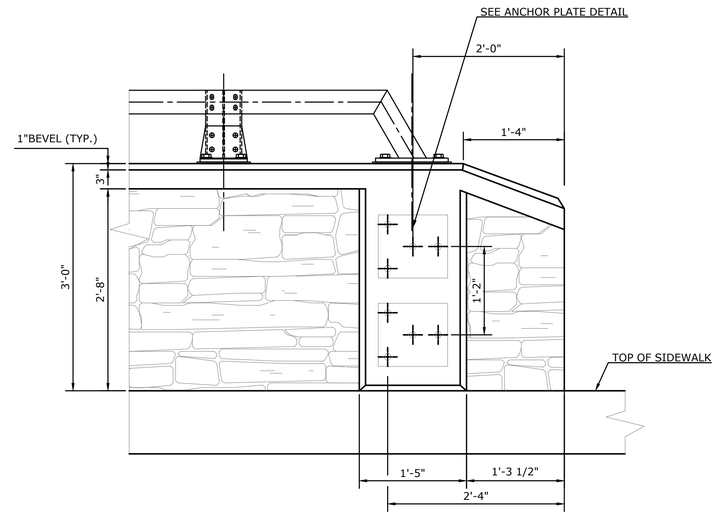

ELEVATION VIEW B-B

SCALE: 1" = 1'-0"

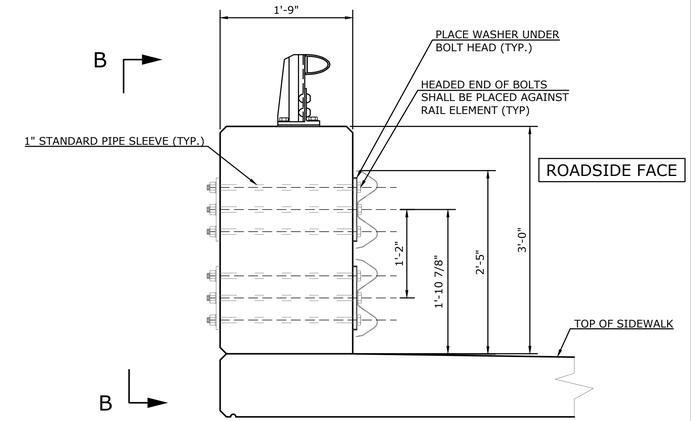

SECTION A-A

SCALE: 1" = 1'-0"

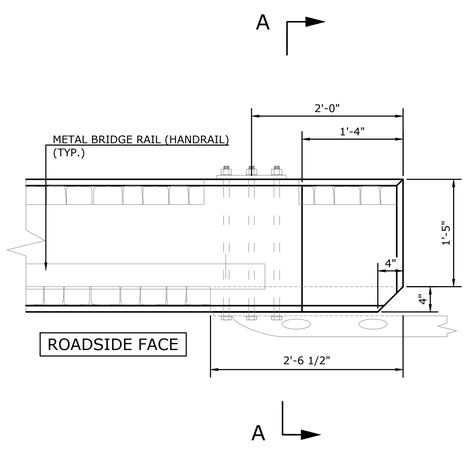

STANDARD 36" PARAPET PLAN VIEW

SCALE: 1" = 1'-0"

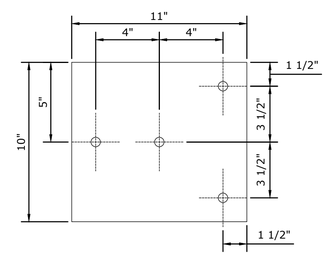

ANCHOR PLATE DETAIL

SCALE: N.T.S.

NOTES:

1. STEEL PLATES SHALL CONFORM TO REQUIREMENTS OF ASTM A36. THE STEEL PLATES SHALL BE HOT-DIP GALVANIZED IN ACCORDANCE WITH THE REQUIREMENTS OF ASTM A123
2. 1" DIA. PIPE SHALL CONFORM TO ASTM A53 GRADE B ASTM A501 AND SHALL BE GALVANIZED IN ACCORDANCE WITH THE REQUIREMENTS OF ASTM A123.
3. ALL RAIL ANCHORAGE MATERIAL REQUIRED FOR END ATTACHMENTS SHALL BE PAID FOR UNDER THE APPLICABLE ROADWAY ITEMS.
4. THE $\frac{7}{8}$" DIAMETER ANCHOR BOLTS SHALL CONFORM TO THE REQUIREMENTS OF ASTM A449
5. NUTS SHALL BE HEAVY HEX AND CONFORM TO THE REQUIREMENTS OF ASTM A563, PROPERTY CLASS 10S
6. WASHERS SHALL BE CIRCULAR, HARDENED WASHERS CONFORMING TO THE REQUIREMENTS OF ASTM F436
7. ALL ANCHOR BOLTS, NUTS AND WASHERS SHALL BE HOT-DIP GALVANIZED IN ACCORDANCE WITH ASTM A153
8. SEE CTDOT STANDARD SHEET HW-910_07 "R-B 350 BRIDGE ATTACHMENT TO VERTICAL SHAPE PARAPET" FOR MORE DETAILS.

THE INFORMATION, INCLUDING ESTIMATED QUANTITIES OF WORK SHOWN ON THESE SHEETS IS BASED ON LIMITED INVESTIGATIONS BY THE TOWN AND IS IN NO WAY WARRANTED TO INDICATE THE TRUE CONDITIONS OR ACTUAL QUANTITIES OR DISTRIBUTION OF QUANTITIES OF WORK WHICH WILL BE REQUIRED.

NO.	DATE	DESCRIPTION

REVISIONS

SUPV.	K.O.E.
DESIGN	E.D.
DRAWN	N.S. / S.A.M.
CHECKED	J.A.W.
DATE	09/07/2021

WMC CONSULTING ENGINEERS

• WENGELL, McDONNELL & COSTELLO •
87 HOLMES ROAD
NEWINGTON, CT 06111
(860) 667-9624

PREPARED FOR

CITY OF MERIDEN
142 E MAIN STREET
MERIDEN, CT 06450

REPLACEMENT OF CEDAR STREET
BRIDGE OVER HARBOR BROOK
METAL BEAM RAIL ATTACHMENT DETAILS

SIZE	PROJECT	FILE NAME	NUMBER	REV.	SHEET	OF
D –	CEDAR STREET –	F.D. –	17088 –		31	32

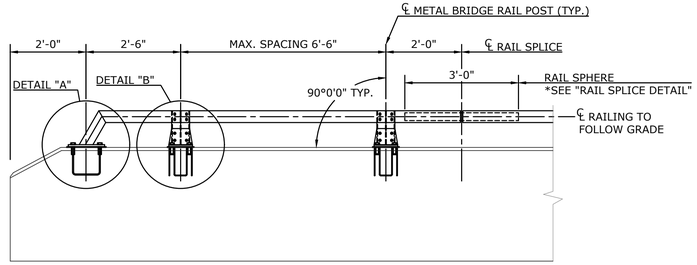

ELEVATION

SCALE: 1/2" = 1'-0"

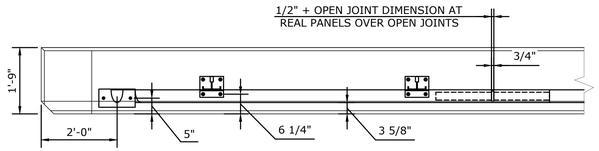

PLAN

SCALE: 1/2" = 1'-0"

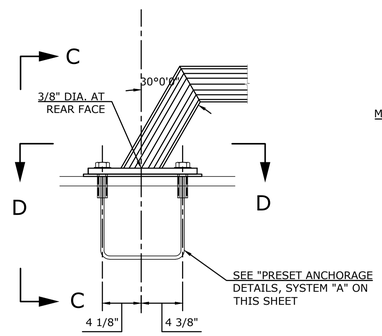

DETAIL-END RAIL "A"

SCALE: 1 1/2" = 1'-0"

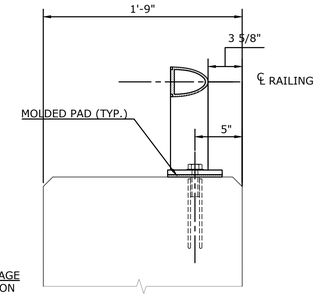

DETAIL-END RAIL "C-C"

SCALE: 1 1/2" = 1'-0"

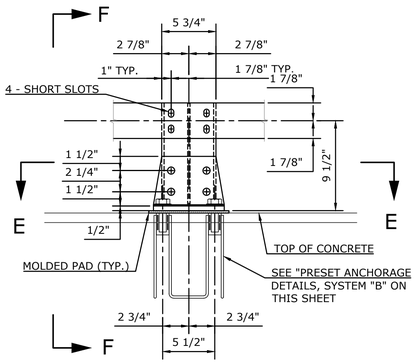

DETAIL-INTERIOR POST "B"

SCALE: 1 1/2" = 1'-0"

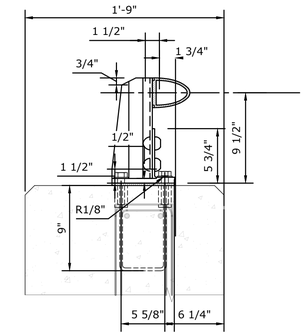

DETAIL-INTERIOR POST "F-F"

SCALE: 1 1/2" = 1'-0"

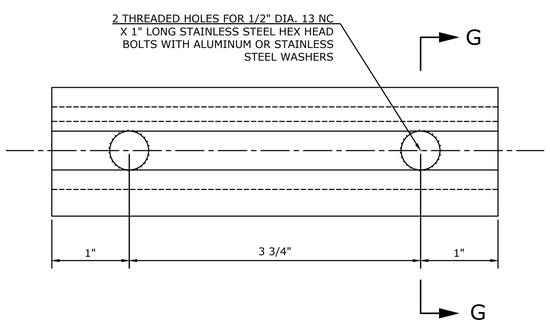

POST CONNECTION DEVICE DETAIL

SCALE: NTS

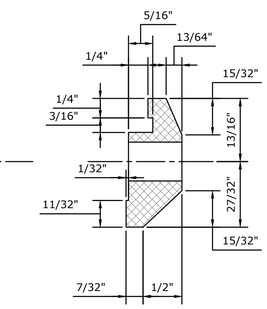

SECTION "G-G"

SCALE: NTS

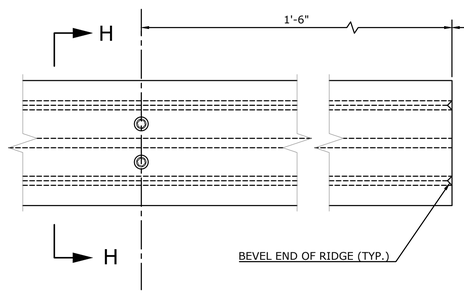

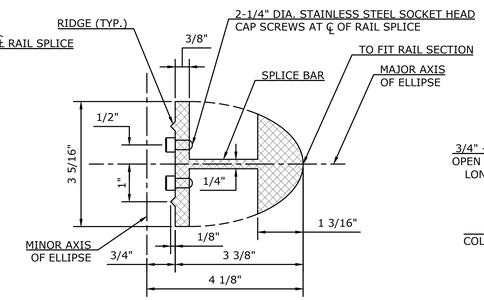

RAIL SPLICE DETAILS

SCALE: 6" = 1'-0"

NOTES:

ALTERNATIVELY, 2 -1/2" LONG CLOSE END FERRULES PROVIDING A MINIMUM FULL LENGTH OF 2", MAY BE USED.

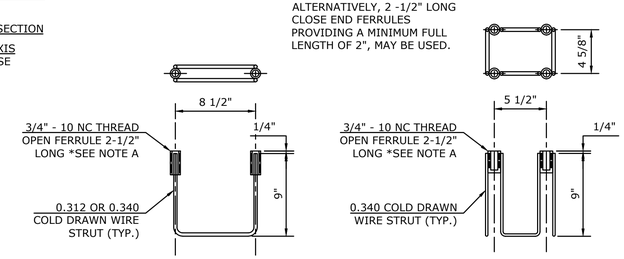

PRESET ANCHORAGE DETAILS

SCALE: 1 1/2" = 1'-0"

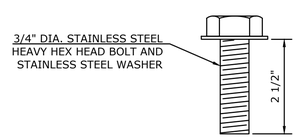

BOLT FOR PRESET ANCHORAGE

SCALE: 6" = 1'-0"

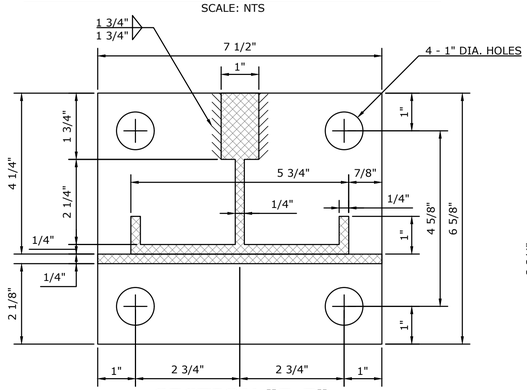

SECTION "E-E"

SCALE: 6" = 1'-0"

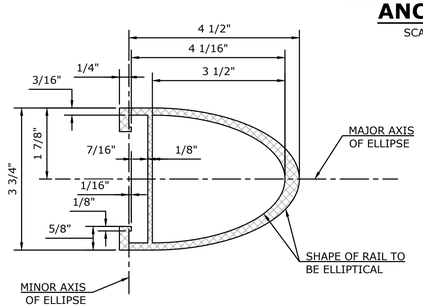

RAIL SECTION

SCALE: 6" = 1'-0"

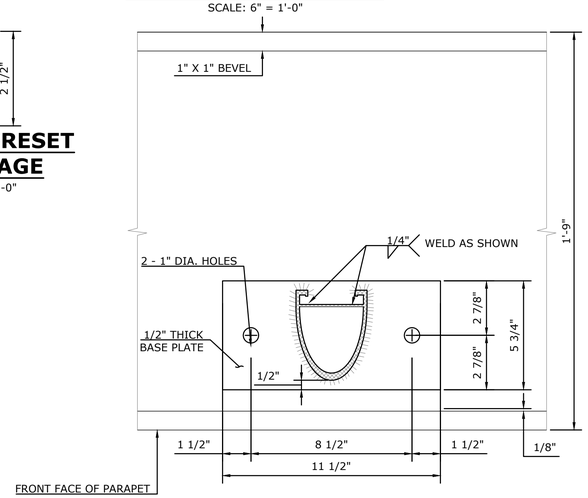

SECTION-END RAIL "D-D"

SCALE: 3" = 1'-0"

NOTES:

ALUMINUM WELDING SHALL BE IN ACCORDANCE WITH THE AMERICAN WELDING SOCIETY "STRUCTURAL WELDING CODE-ALUMINUM", ANSI/AWS D1.2.

RIVETING SHALL BE DONE IN ACCORDANCE WITH ARTICLE 6.5 - RIVETING OF THE AASHTO SPECIFICATIONS FOR ALUMINUM STRUCTURES".

METAL BRIDGE RAIL: THE RAILING POSTS, POST CONNECTION DEVICES, SPLICE BARS AND RAILS SHALL BE EXTRUDED ALUMINUM AND CONFORM TO THE REQUIREMENTS OF ASTM B221, ALUMINUM ALLOY 6061-T6 OR 6005-T5.

SOCKET HEAD CAP SCREWS SHALL BE STAINLESS SHALL BE STAINLESS STEEL AND CONFORM TO THE REQUIREMENTS OF ASTM F837, GROUP 1 (ANSI TYPE 304).

ALL BOLTS SHALL BE STAINLESS STEEL AND CONFORMS TO THE REQUIREMENTS OF ASTM F593, GROUP 1, (ANSI TYPE 304). NUTS SHALL BE STAINLESS STEEL AND CONFORM TO THE REQUIREMENTS OF ASTM F594, GROUP 1. WASHERS SHALL BE STAINLESS AND CONFORM TO THE REQUIREMENTS OF ASTM A167, TYP 302 THROUGH 305.

CONE POINT RIVETS SHALL CONFORM TO ASTM B316, ALUMINUM ALLOY 6061-T6 OR ASTM B221, ALUMINUM ALLOY 6061-T-6.

LENGTHS OF RAIL ELEMENTS SHALL BE CONTINUOUS OVER FOUR RAIL POSTS WHEREVER POSSIBLE BUT IN NO CASE LESS THAN TWO. WELDING OF TWO OR MORE RAILS TO FORM AN ELEMENT WILL NOT BE ALLOWED. RAIL SPLICES SHALL BE LOCATED IN RAIL PANELS OVER OPEN JOINTS IN PARAPETS. SPLICE BARS SHALL HAVE A SLIDING FIT IN THE RAIL SECTIONS.

ALUMINUM RAILINGS SHALL BE CAREFULLY ADJUSTED PRIOR TO FIXING IN PLACE TO INSURE PROPER MATCHING AT ABUTTING JOINTS AND CORRECT ALIGNMENT AND CURVATURE THROUGH OUT THEIR LENGTH. AFTER INSTALLATION, ALL RAILS AND POSTS SHALL BE FREE OF BURRS, SHARP EDGES AND IRREGULARITIES.

PRESET ANCHORAGES: THE WIRE STRUTS SHALL BE COLD-DRAWN AND CONFORM TO ASTM A510, GRADE 1030. THE FERRULES SHALL CONFORM TO ASTM 108, GRADE 12L14. AFTER FABRICATION, THE PRESET ANCHORAGES SHALL BE HOT-DIP GALVANIZED IN ACCORDANCE WITH ASTM A153. THE BOLTS SHALL BE "FREE RUNNING" IN THE FERRULES AFTER GALVANIZATION.

THE ANCHORAGE ASSEMBLIES SHALL BE INSTALLED PERPENDICULAR TO THE GRADE OF THE BRIDGE DECK. THE ANCHORAGES SHALL BE FIRMLY AND ACCURATELY HELD IN POSITION PRIOR TO AND DURING THE PLACING OF CONCRETE.

MOLDED PADS: MOLDED PADS SHALL BE MANUFACTURED FROM NEW UNVULCANIZED ELASTOMER AND UNUSED SYNTHETIC FIBERS, WITH A WEIGHT PROPORTION OF FIBER CONTENT EQUAL TO APPROXIMATELY ONE-HALF OF THE TOTAL WEIGHT OF THE PAD.

ANODIZING: METAL BRIDGE RAIL SHALL NOT BE ANODIZED.

THE INFORMATION, INCLUDING ESTIMATED QUANTITIES OF WORK SHOWN ON THESE SHEETS IS BASED ON LIMITED INVESTIGATIONS BY THE TOWN AND IS IN NO WAY WARRANTED TO INDICATE THE TRUE CONDITIONS OR ACTUAL QUANTITIES OR DISTRIBUTION OF QUANTITIES OF WORK WHICH WILL BE REQUIRED.

NO.	DATE	DESCRIPTION

REVISIONS

SUPV.	K.O.E.
DESIGN	E.D.
DRAWN	N.S. / S.A.M.
CHECKED	J.A.W.
DATE	09/07/2021

WMC CONSULTING ENGINEERS

• WENGELL, McDONNELL & COSTELLO •
87 HOLMES ROAD
NEWINGTON, CT 06111
(860) 667-9624

PREPARED FOR

CITY OF MERIDEN
142 E MAIN STREET
MERIDEN, CT 06450

REPLACEMENT OF CEDAR STREET
BRIDGE OVER HARBOR BROOK
METAL BRIDGE RAIL (HANDRAIL)

SIZE	PROJECT	FILE NAME	NUMBER	REV.	SHEET OF
D	CEDAR STREET	F.D.	17088		32 / 32

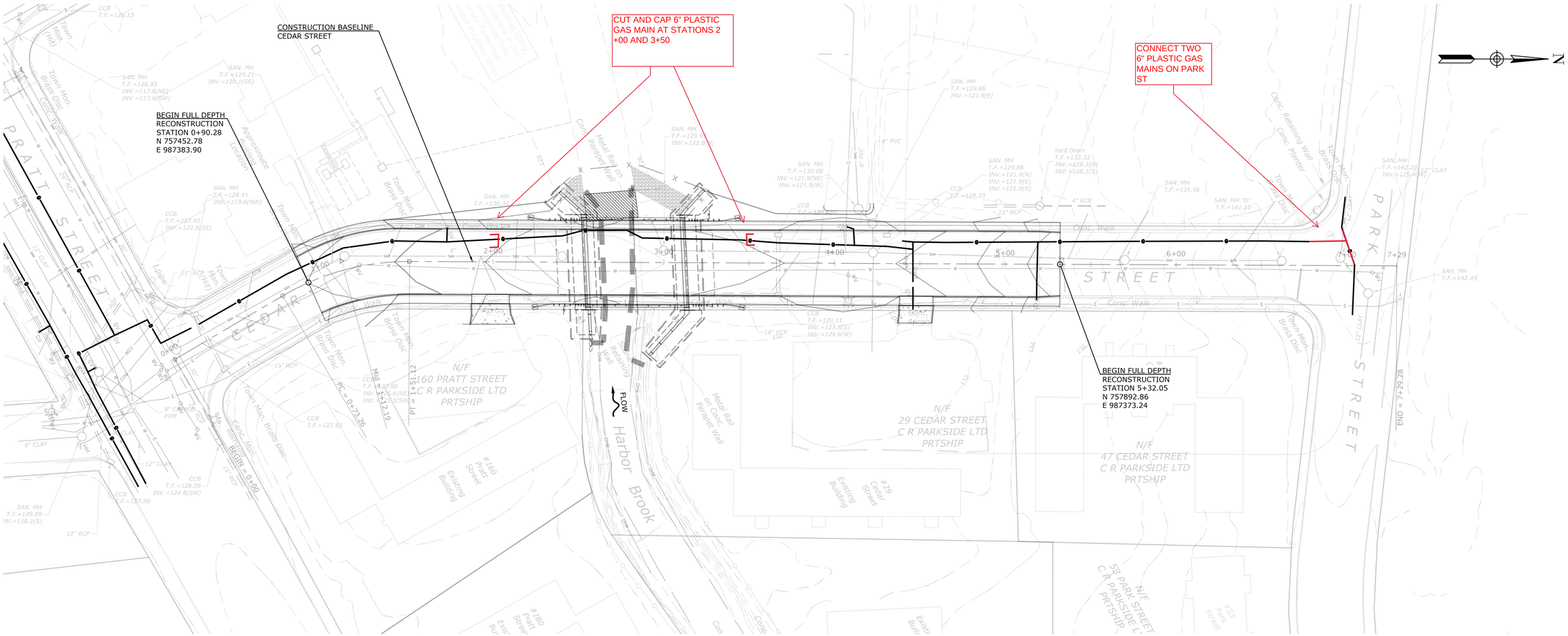

UTILITY RELOCATION PLAN

SCALE: 1" = 30'

FOR INFORMATIONAL PURPOSES ONLY

Phase 1 - Gas Main Cut and Cap Isolation

THE INFORMATION, INCLUDING ESTIMATED QUANTITIES OF WORK SHOWN ON THESE SHEETS IS BASED ON LIMITED INVESTIGATIONS BY THE TOWN AND IS IN NO WAY WARRANTED TO INDICATE THE TRUE CONDITIONS OR ACTUAL QUANTITIES OR DISTRIBUTION OF QUANTITIES OF WORK WHICH WILL BE REQUIRED.

NO.	DATE	DESCRIPTION

REVISIONS

SUPV.	K.O.E.
DESIGN	E.D.
DRAWN	N.S. / S.A.M.
CHECKED	J.A.W.
DATE	5/21/2021

WMC CONSULTING ENGINEERS

• WENGELL, McDONNELL & COSTELLO •
87 HOLMES ROAD
NEWINGTON, CT 06111
(860) 667-9624

PREPARED FOR

CITY OF MERIDEN
142 E MAIN STREET
MERIDEN, CT 06450

REPLACEMENT OF CEDAR STREET BRIDGE OVER HARBOR BROOK
UTILITY RELOCATION PLAN
(EVERSOURCE-GAS)

SIZE	PROJECT	FILE NAME	NUMBER	REV.	SHEET	OF
D –	CEDAR STREET –	F.D. –	17088 –		UTL-1	1

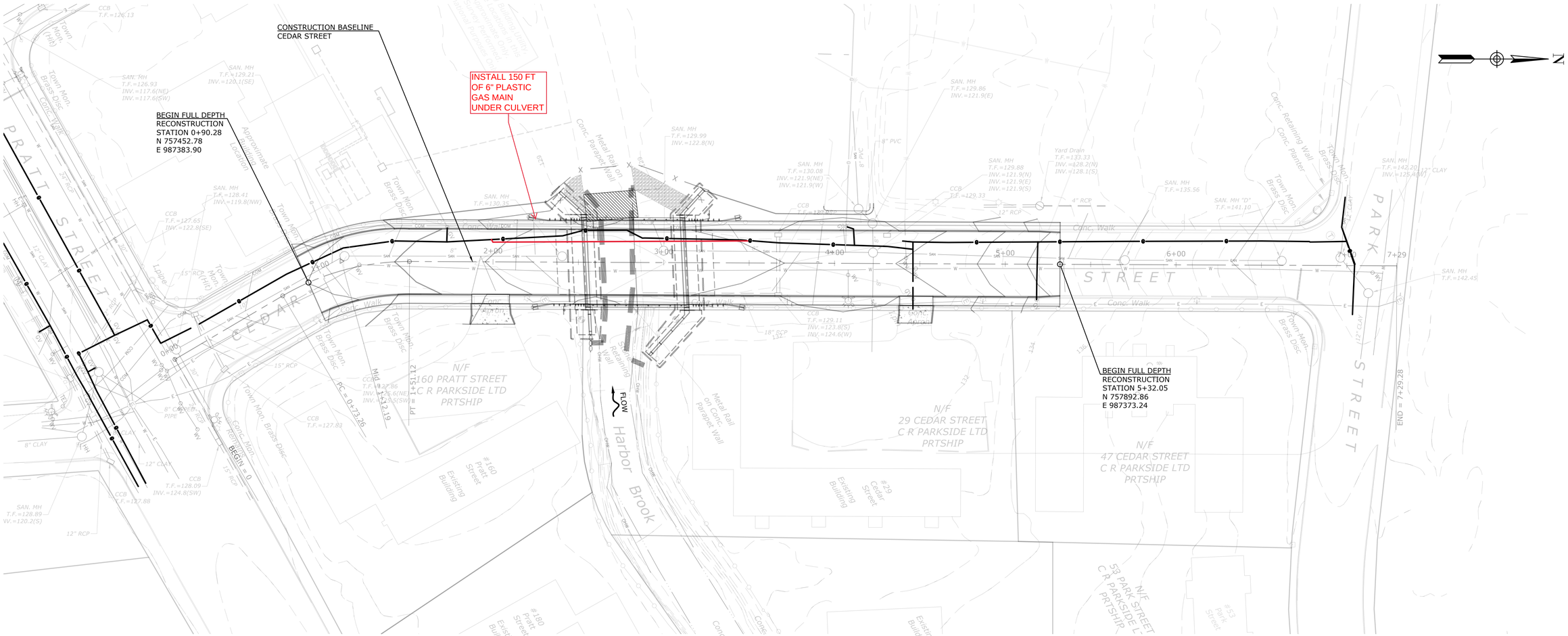

UTILITY RELOCATION PLAN

SCALE: 1" = 30'

FOR INFORMATIONAL PURPOSES ONLY

Phase 2 - Gas Main Installation and Reactivation

THE INFORMATION, INCLUDING ESTIMATED QUANTITIES OF WORK SHOWN ON THESE SHEETS IS BASED ON LIMITED INVESTIGATIONS BY THE TOWN AND IS IN NO WAY WARRANTED TO INDICATE THE TRUE CONDITIONS OR ACTUAL QUANTITIES OR DISTRIBUTION OF QUANTITIES OF WORK WHICH WILL BE REQUIRED.

NO.	DATE	DESCRIPTION

REVISIONS

SUPV.	K.O.E.
DESIGN	E.D.
DRAWN	N.S. / S.A.M.
CHECKED	J.A.W.
DATE	5/21/2021

WMC CONSULTING ENGINEERS

• WENGELL, McDONNELL & COSTELLO •
87 HOLMES ROAD
NEWINGTON, CT 06111
(860) 667

PREPARED FOR

CITY OF MERIDEN
142 E MAIN STREET
MERIDEN, CT 06450

REPLACEMENT OF CEDAR STREET BRIDGE OVER HARBOR BROOK
UTILITY RELOCATION PLAN
(EVERSOURCE-GAS)

SIZE	PROJECT	FILE NAME	NUMBER	REV.	SHEET	OF
D –	CEDAR STREET –	F.D. –	17088 –		UTL-1	1

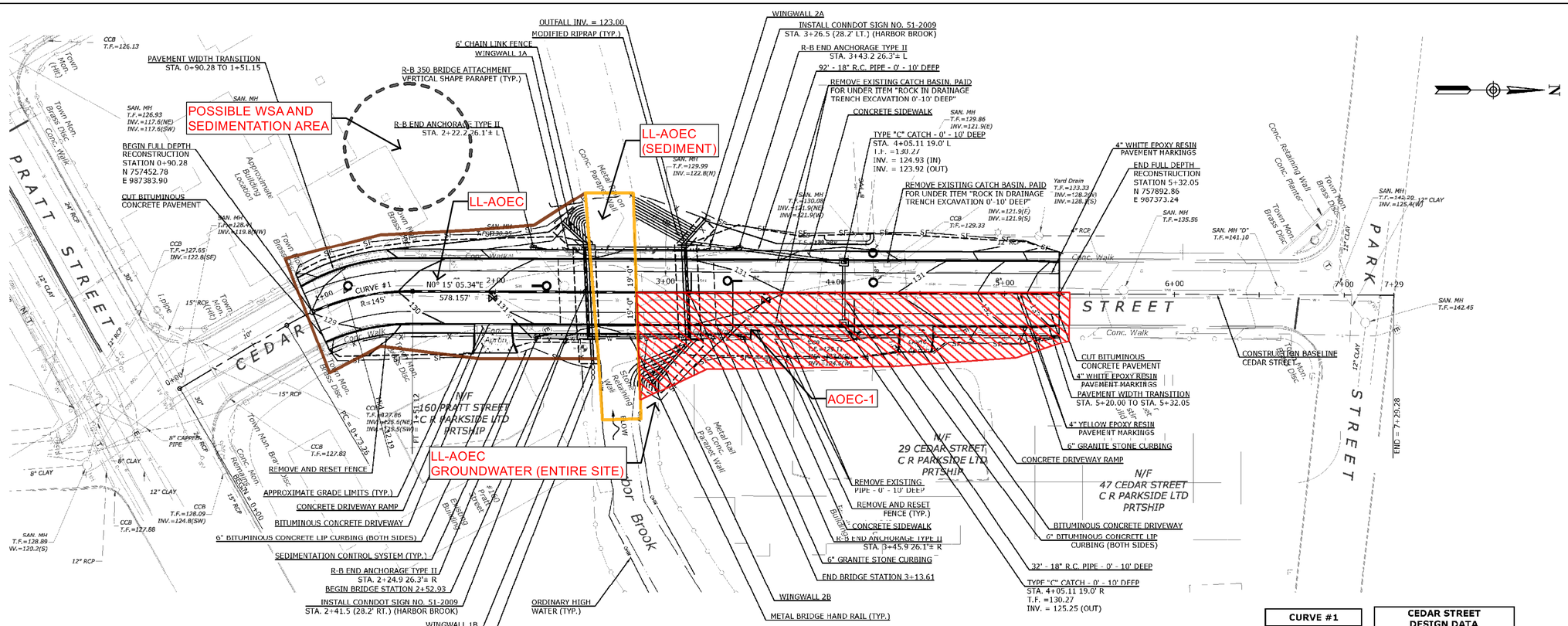

ROADWAY PLAN

SCALE: 1" = 30'-0"

CURVE #1
PI N 757472.04
PI E 987371.39
L = 77.86'
Δ = 39° 51' 43"
R = 145.00'
T = 39.89'

CEDAR STREET DESIGN DATA	
ROAD CLASS	LOCAL URBAN
DESIGN SPEED	25 MPH
ADT (2020)	776 VPD
RADIUS (MIN.)	145 FT.
e	N/A
MAXIMUM GRADE	3.75%
CROSS SLOPE	2.00%
K (SAG MIN.)	26
K (CREST MIN.)	12

NOTES:

1. TOPOGRAPHIC AND BOUNDARY SURVEY INFORMATION & BASE MAPPING PROVIDED BY MILONE & MACBROOM, INC., 99 REALTY DRIVE, CHESHIRE, CT 06410, DATED: 5/7/18, REVISED 6/5/18 AND HAS BEEN PREPARED IN ACCORDANCE WITH SECTIONS 20-300B-1 THRU 20-300B-20 OF THE REGULATIONS OF CONNECTICUT STATE AGENCIES - "MINIMUM STANDARDS FOR SURVEYS AND MAPS IN THE STATE OF CONNECTICUT" AS ENDORSED BY THE CONNECTICUT ASSOCIATION OF LAND SURVEYORS, INC. ON SEPT. 26, 1996. IT IS A TOPOGRAPHIC SURVEY CONFORMING TO TOPOGRAPHIC ACCURACY CLASS T-2, AND IS INTENDED TO DEPICT THE EXISTING CONDITIONS OF THE SITE.
2. HORIZONTAL CONTROL BASED ON N.A.D. 1983.
3. VERTICAL DATUM BASED ON N.G.V.D. 1929.
4. CONTOURS PROVIDED BY THE CITY OF MERIDEN.
5. STREET LINES FOR ALL ROADWAYS SHOWN ARE BASED UPON CITY OF MERIDEN TAX ASSESSORS MAPS.
6. PROPERTY LINES ARE BASED UPON CITY OF MERIDEN TAX ASSESSORS MAPS AND LIMITED RESEARCH. PROPERTY LINES ARE NOT TO BE CONSIDERED AS ACCURATE UNTIL SUCH TIME AS AN ACCURATE SURVEY IS PERFORMED.
7. ALL DIMENSIONS ARE SHOWN IN FEET UNLESS NOTED OTHERWISE. ALL ELEVATIONS ARE GIVEN IN FEET. WHEN THE ELEVATIONS ARE GIVEN TO LESS THAN THREE DECIMAL PLACES, THE OMITTED DIGITS SHALL BE ASSUMED TO BE ZEROS.
8. UTILITY LOCATIONS AS SHOWN ARE APPROXIMATE AND SHALL BE VERIFIED BY THE CONTRACTOR IN THE FIELD. CALL BEFORE YOU DIG 1-800-922-4455. IN ADDITION THE CONTRACTOR SHALL COORDINATE HIS CONSTRUCTION ACTIVITIES NEAR UTILITY LOCATION WITH RESPECTIVE UTILITY REPRESENTATIVES. THE CONTRACTOR SHALL BE HELD RESPONSIBLE FOR DISRUPTION AND REPAIRS OF EXISTING INDIVIDUAL UTILITY SERVICE CONNECTION.
9. LIMIT OF INLAND WETLANDS DELINEATED BY MMI IN 2011.
10. UNCONFINED IN-STREAM ACTIVITIES MUST BE LIMITED TO THE TIME PERIOD JUNE 1 THROUGH SEPTEMBER 30.
11. THE PROJECT SHOULD NOT BE CONDUCTED IN A MANNER WHICH IMPEDES STREAM FLOW.
12. EFFLUENT FROM DEWATERED WORK AREA(S) SHOULD NOT BE DISCHARGED DIRECTLY TO THE STREAM BUT MUST BE PROCESSED THROUGH TREATMENT STRUCTURE(S). SUCH STRUCTURES SHOULD NOT BE LOCATED WITHIN THE STREAM CHANNEL OR ADJACENT WETLANDS.
13. ALL APPROPRIATE EROSION AND SEDIMENT CONTROL MEASURES SHOULD BE ESTABLISHED PRIOR TO AND MAINTAINED THROUGHOUT ALL CONSTRUCTION PHASES. SEE SEPARATE PLAN SHEET FOR EROSION & SEDIMENTATION DETAILS.
14. ALL CUT OR FILL SLOPES GREATER THAN 2H:1V SHALL BE COVERED WITH JUTE NETTING UNTIL PERMANENT GROUND COVER IS ESTABLISHED AS MAY BE DIRECTED BY THE ENGINEER.
15. ANY ACTIVITIES OTHER THAN THOSE SHOWN ON THE PLANS OR DETAILED IN THE WETLANDS PERMIT THAT OCCUR IN THE REGULATED WETLANDS AREA SHALL BE SUBJECT TO APPROVAL BY THE LOCAL INLAND/WETLANDS AUTHORITY OR ITS DESIGNATED REPRESENTATIVE.
16. UTILITY RELOCATIONS: OVERHEAD OR UNDERGROUND UTILITY LINES MAY BE IN CONFLICT WITH DRIVING SHEET PILING, THE SETTING OF PRECAST BOX CULVERT SECTIONS AND OTHER CONSTRUCTION. DEPENDING UPON THE CONTRACTOR'S CONSTRUCTION OPERATIONS, THESE UTILITIES MAY NEED TO BE TEMPORARILY RELOCATED FOR PORTIONS OF THE CONSTRUCTION OPERATIONS AND THEN MOVED BACK TO PERMANENT LOCATIONS WHICH MAY BE OTHER THAN CURRENT LOCATIONS. EXCEPT FOR UTILITY WORK SPECIFICALLY INCLUDED IN THIS CONTRACT THE ACTUAL UTILITY RELOCATIONS (PERMANENT OR TEMPORARY) WILL BE THE RESPONSIBILITY OF THE INDIVIDUAL UTILITY OWNER, HOWEVER THE CONTRACTOR WILL BE REQUIRED TO COORDINATE ALL UTILITY RELOCATIONS WITH EACH UTILITY OWNER AND TO PHASE HIS WORK AS REQUIRED TO ACCOMMODATE TEMPORARY AND PERMANENT UTILITY RELOCATION WORK.
17. THERE IS NO FEMA FLOODWAY FOR THIS REACH OF HARBOR BROOK. DEPICTED FLOOD LIMITS EXTEND BEYOND LIMITS OF PLAN.

PAVEMENT MARKING NOTES:

1. FINAL PAVEMENT MARKING SHALL BE EPOXY RESIN AND SHALL MATCH EXISTING MARKINGS AT CONSTRUCTION LIMITS.
2. PAVEMENT MARKINGS SHALL BE INSTALLED PER TRAFFIC STANDARD SHEET TR-1210_04 "PAVEMENT MARKING LINES AND SYMBOLS" AND TR-1210_08 "PAVEMENT MARKINGS FOR NON FREEWAYS".

SIGNING NOTES:

1. ALL EXISTING SIGNS WITHIN THE CONSTRUCTION LIMITS SHALL BE REMOVED AND RESET UNLESS OTHERWISE NOTED ON THE PLAN OR DIRECTED BY THE ENGINEER. REMOVING AND RESETTING SIGNS SHALL BE PAID FOR IN "CLEARING AND GRUBBING".
2. SIGNS TO BE INSTALLED PER TRAFFIC STANDARD SHEETS TR-1208_01 "SIGN PLACEMENT AND RETROREFLECTIVE STRIP DETAILS" AND TR-1208_02 "METAL SIGN POSTS AND SIGN MOUNTING DETAILS", EXCEPT AS NOTED.
3. EXACT SIGN LOCATIONS TO BE VERIFIED BY THE ENGINEER.
4. SIGNS SHALL BE PLACED NO CLOSER THAN 10 FEET FROM UTILITY POLES.

THE INFORMATION, INCLUDING ESTIMATED QUANTITIES OF WORK SHOWN ON THESE SHEETS IS BASED ON LIMITED INVESTIGATIONS BY THE TOWN AND IS IN NO WAY WARRANTED TO INDICATE THE TRUE CONDITIONS OR ACTUAL QUANTITIES OR DISTRIBUTION OF QUANTITIES OF WORK WHICH WILL BE REQUIRED.

NO.	DATE	DESCRIPTION

REVISIONS

SUPV.	K.O.E.
DESIGN	E.D.
DRAWN	N.S. / S.A.M.
CHECKED	J.A.W.
DATE	6/30/2021

WMC CONSULTING ENGINEERS
• WENGELL, McDONNELL & COSTELLO •
87 HOLMES ROAD
NEWINGTON, CT 06111
(860) 667-9624

PREPARED FOR
CITY OF MERIDEN
142 E MAIN STREET
MERIDEN, CT 06450

REPLACEMENT OF CEDAR STREET BRIDGE OVER HARBOR BROOK
ROADWAY PLAN

SIZE	PROJECT	FILE NAME	NUMBER	REV.
D	CEDAR STREET	F.D.	17088	

SHEET 5 OF 32

N

SLR
99 REALTY DRIVE
CHESHIRE, CT 06410
203.271.1773

ENVIRONMENTAL PLAN
TASK 310 PLANS, SPECIFICATIONS AND ESTIMATES
REPLACEMENT OF CEDAR STREET BRIDGE
CEDAR STREET
MERIDEN, CONNECTICUT

SCALE N.T.S
DATE 8/25/21
PROJECT NO. 141.11261.00072

ENV.1

Date Saved: 9/1/2021 MXD: Y:\1261-72\Maps\WMC Figure.mxd

Copyright SLR Consulting - 2021

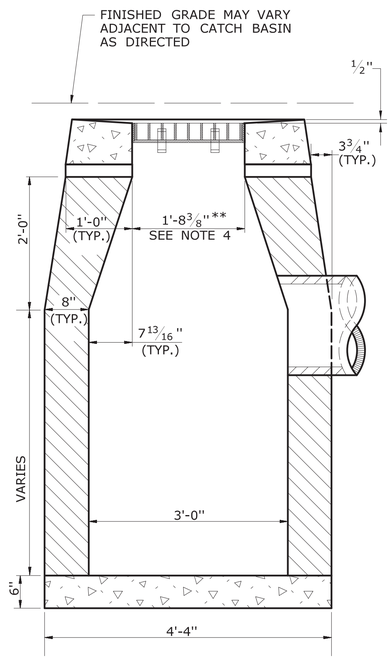

SECTION B

TYPE "C-L" CATCH BASIN

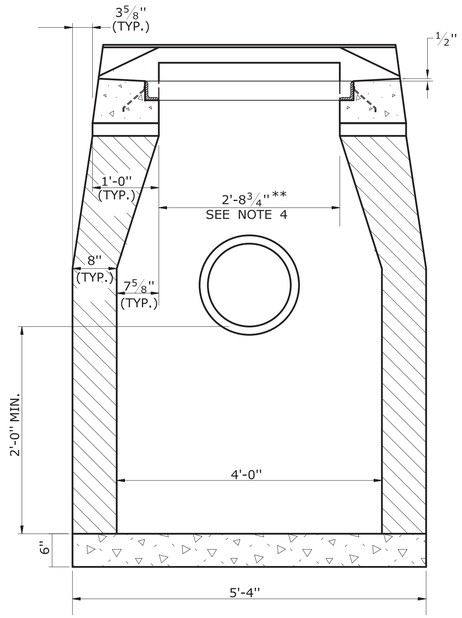

SECTION A

TYPE "C" & "C-L" CATCH BASIN (TYPE "C" TOP SHOWN)

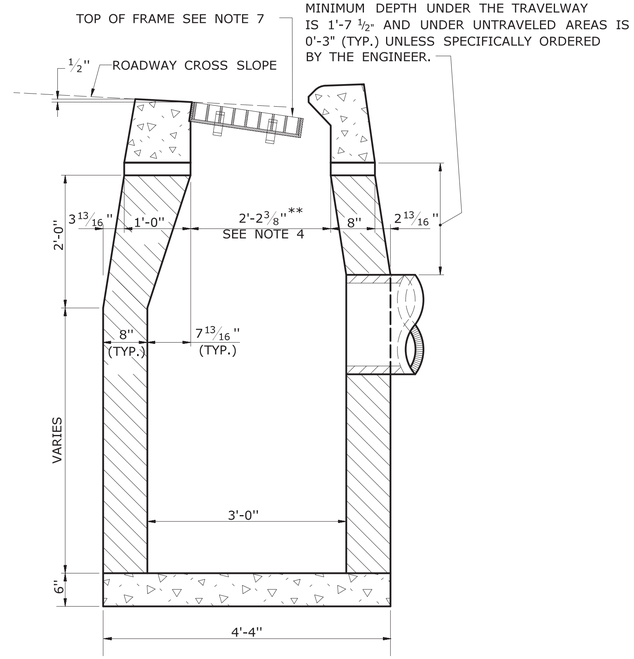

SECTION B

TYPE "C" CATCH BASIN

GENERAL NOTES:

1. FOR CATCH BASIN TOPS, SEE SHEET NO. HW-586_07.
2. ALL FACES OF STRUCTURES IN CONTACT WITH CONCRETE PAVEMENT SHALL BE COVERED WITH A LAYER OF TAR PAPER OR APPROVED EQUAL.
3. USE 6'-0" ON UPGRADE SIDE (SEE PLAN VIEW) OF CONTINUOUS GRADE AND 1'-0" ON DOWNGRADE SIDE OF CONTINUOUS GRADE OR AS DIRECTED BY THE ENGINEER.
4. IF MASONRY UNITS ARE REQUIRED, THE BASIN SHALL BE CONSTRUCTED IN CONFORMANCE WITH THE DIMENSIONS SHOWN. CORBELLING SHALL BE PERMITTED TO A MAXIMUM OF 3". NO PROJECTION SHALL EXTEND INSIDE THE LIMITS FOR THE CATCH BASIN OPENINGS SHOWN IN THE SECTION VIEWS **.
5. WALL THICKNESS OF ALL CATCH BASINS OVER 10' DEEP SHALL BE INCREASED TO 12" THICK. INSIDE DIMENSION SHALL REMAIN THE SAME. 12" THICKNESS SHALL START AFTER THE FIRST 10'.
6. SPACERS CAN BE EITHER CONCRETE MASONRY UNIT OR PRECAST WITH THE REQUIRED REINFORCING (RECOMMENDED BY THE MANUFACTURER) AS NEEDED TO PROVIDE THE PROPER GRADE SHOWN ON THE PLANS.
7. TOP OF FRAME ELEVATION SHALL BE MEASURED IN THE CENTER OF GRATE AT GUTTER LINE.

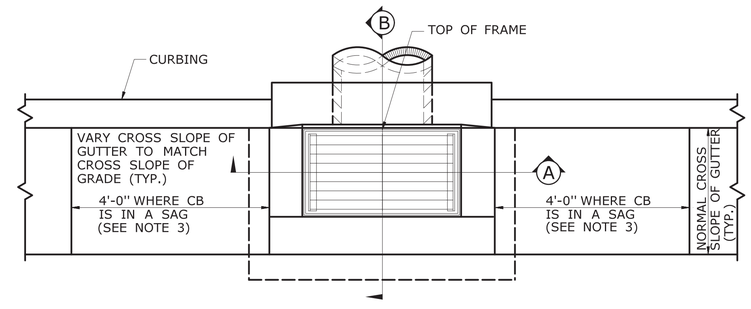

PLAN

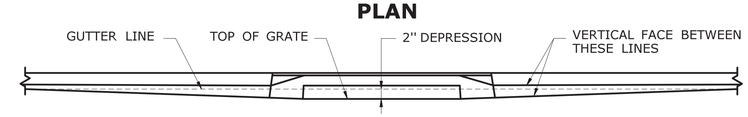

CATCH BASINS IN A LINE WITH 4" CONCRETE PARK CURBING OR 4" BITUMINOUS CONCRETE PARK CURBING

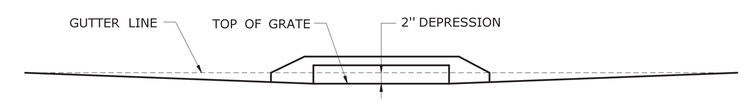

CATCH BASINS WHERE NO CURBING OF ANY TYPE EXISTS OR IS PROPOSED

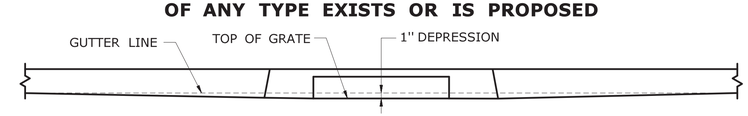

CATCH BASINS IN A LINE WITH 6" CONCRETE CURBING OR 6" STONE CURBING

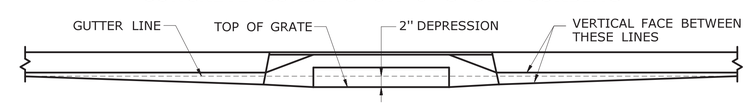

CATCH BASINS IN A LINE WITH 6" BITUMINOUS CONCRETE LIP CURBING (MACHINE FORMED)

DETAILS OF DEPRESSED GUTTER STRIP FOR TYPE "C" CATCH BASIN

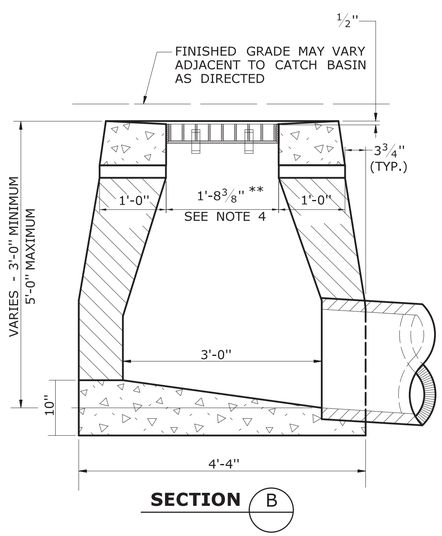

SECTION B

TYPE "C-L" DROP INLET

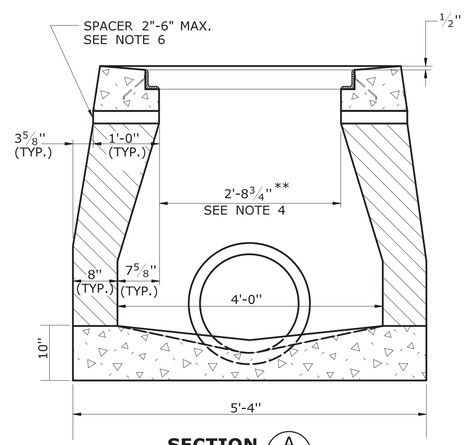

SECTION A

TYPE "C" & "C-L" DROP INLET (TYPE "C-L" TOP SHOWN)

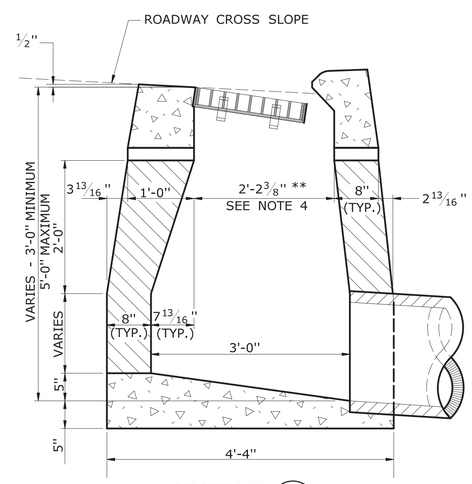

SECTION B

TYPE "C" DROP INLET

	NOT TO SCALE ####	SIGNATURE BLOCK: OFFICE OF ENGINEERING 2800 BERLIN TURNPIKE NEWINGTON, CT 06111	SUBMITTED BY: Leo Fontaine, P.E. 2020.07.08 09:22:22-04'00'	APPROVED BY: James Fallon, P.E. Digitally signed by James Fallon, P.E. DN: C=US, E=James.Fallon@ct.gov, O=Connecticut, L=Rocky Hill, OU=Department of Transportation, OU=Manager of Facilities & Transit, OU=Division of Engineering and Construction, CN=James Fallon, P.E. Location: Wethersfield, Connecticut, CN=US Date: 2020.07.14 08:38:50-04'00'	STATE OF CONNECTICUT DEPARTMENT OF TRANSPORTATION	CTDOT STANDARD SHEET	STANDARD SHEET TITLE: CATCH BASIN AND DROP INLET TYPES "C" AND "C-L"	STANDARD SHEET NO.: HW-586_01

PLOTTED DATE: 7/7/2020

GENERAL NOTES:

1. FOR DETAILS OF FRAMES AND GRATES, SEE SHEET NO. HW-586_08.
2. ALL BARS SHALL HAVE A MINIMUM 2" COVER.

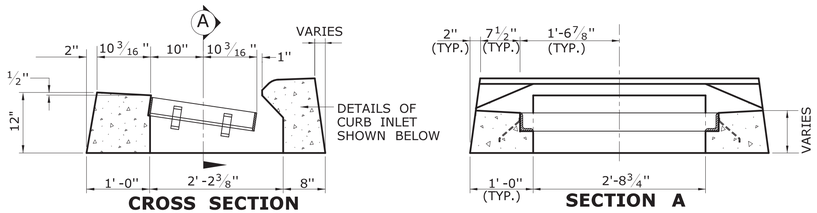

TYPE "C" CATCH BASIN TOP

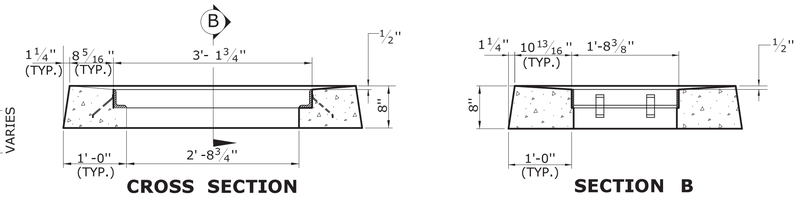

TYPE "C-L" CATCH BASIN TOP

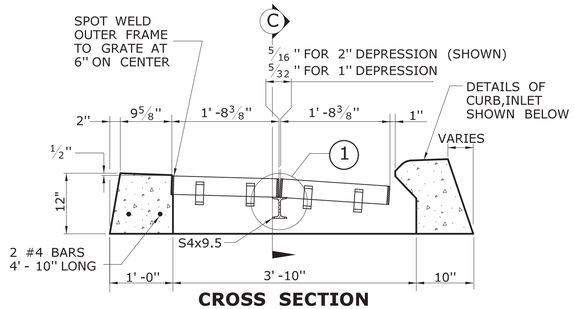

TYPE "C" CATCH BASIN DOUBLE GRATE - TYPE I TOP

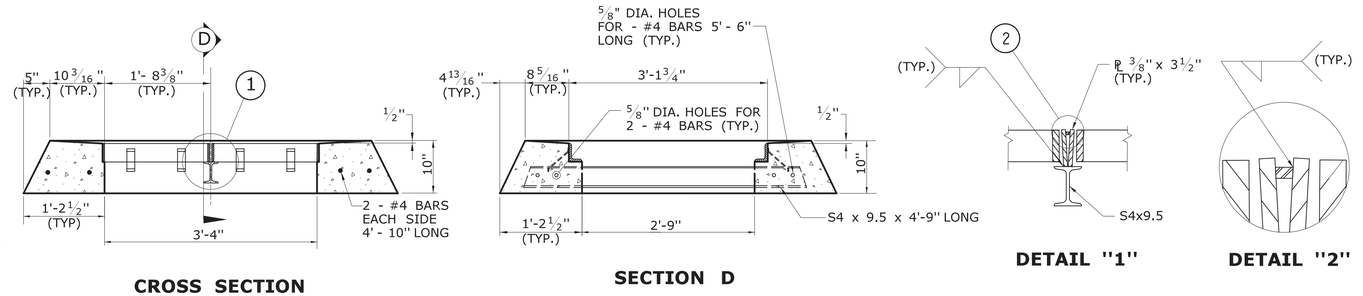

TYPE "C-L" CATCH BASIN DOUBLE GRATE - TYPE I TOP

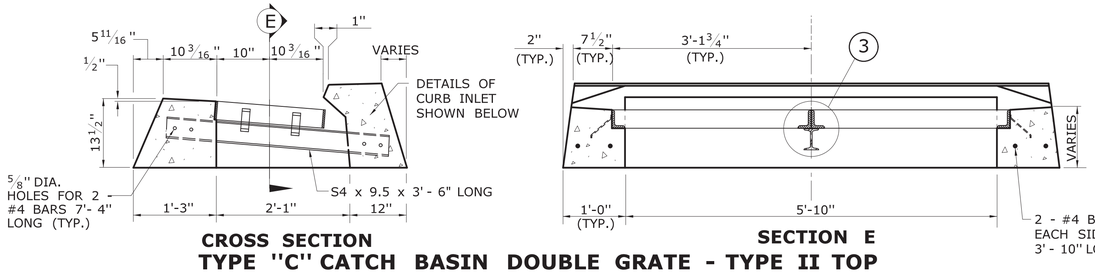

TYPE "C" CATCH BASIN DOUBLE GRATE - TYPE II TOP

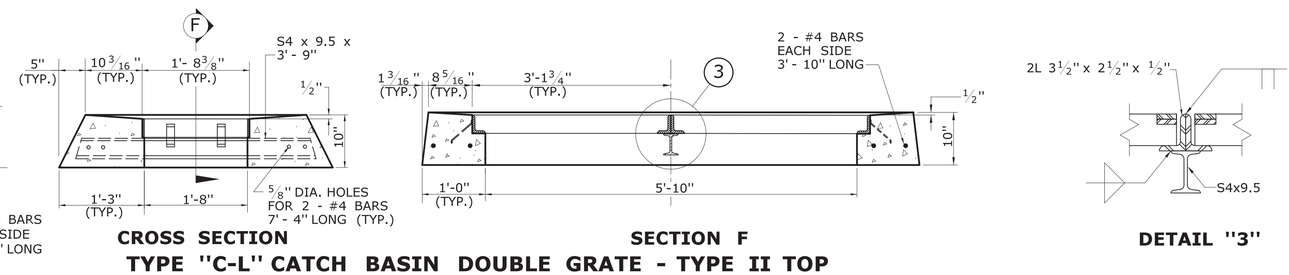

TYPE "C-L" CATCH BASIN DOUBLE GRATE - TYPE II TOP

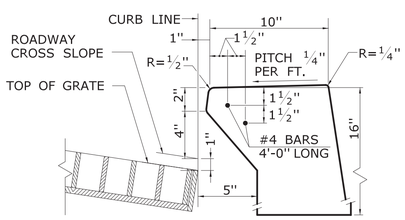

INLET WITH 6" CONCRETE OR STONE CURBING FOR TYPE "C" CB

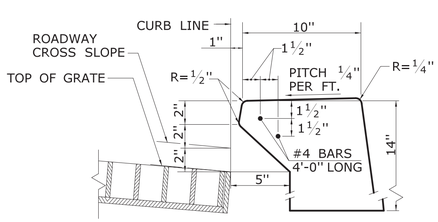

INLET WITH NO CURBING (PLAIN TYPE) FOR TYPE "C" CB

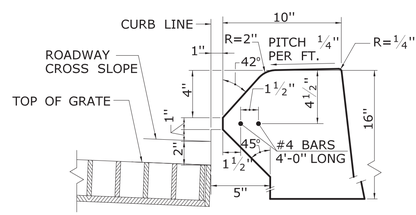

INLET WITH 6" BITUMINOUS CONCRETE LIP CURBING FOR TYPE "C" CB

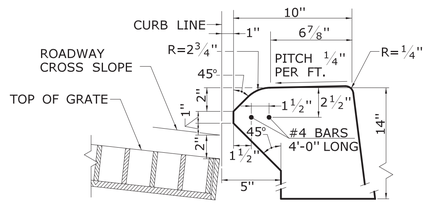

INLET WITH 4" CONCRETE PARK CURBING FOR TYPE "C" CB

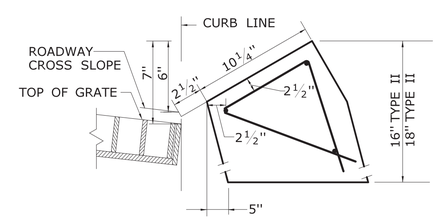

INLET WITH GRANITE SLOPE CURB FOR TYPE "C" CB

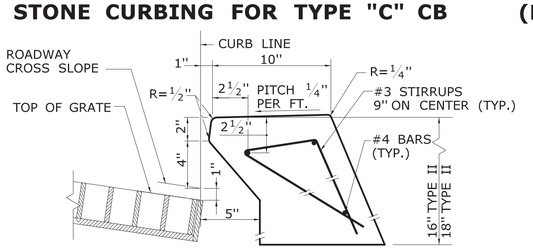

INLET WITH 6" CONCRETE OR STONE CURBING FOR TYPE "C" CB DOUBLE GRATE TYPE I & II

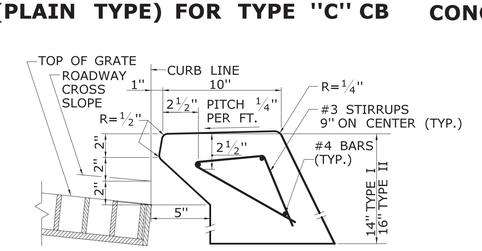

INLET WITH NO CURBING (PLAIN TYPE) FOR TYPE "C" CB DOUBLE GRATE TYPE I & II

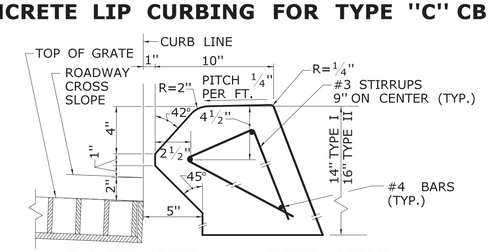

INLET WITH 6" BITUMINOUS CONCRETE LIP CURBING FOR TYPE "C" CB DOUBLE GRATE TYPE I & II

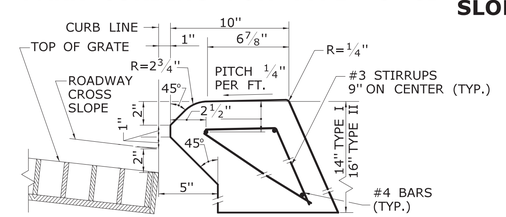

INLET WITH 4" CONCRETE PARK CURBING FOR TYPE "C" CB DOUBLE GRATE TYPE I & II

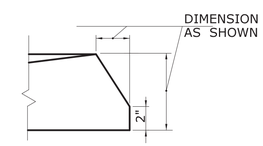

ALTERNATE CONSTRUCTION OF TYPE II TOP

	NOT TO SCALE ####	SIGNATURE BLOCK: OFFICE OF ENGINEERING 2800 BERLIN TURNPIKE NEWINGTON, CT 06111	SUBMITTED BY: Leo Fontaine, P.E. 2020.07.08 09:24:52-04'00'	APPROVED BY: James Fallon, P.E.	STATE OF CONNECTICUT DEPARTMENT OF TRANSPORTATION	CTDOT STANDARD SHEET	STANDARD SHEET TITLE: CATCH BASIN TOPS TYPE "C" AND "C-L"	STANDARD SHEET NO.: HW-586_07

PLOTTED DATE: 6/30/2020

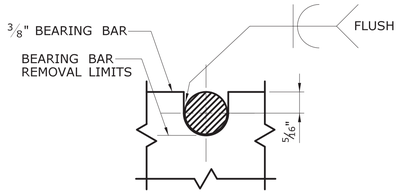

NOTE:
5/8" DIA. ROUND BAR SHALL CONTACT BEARING BAR AT BOTTOM AND BE FLUSH AT TOP.

ROUND BAR ATTACHMENT
CATCH BASIN GRATE TYPE A

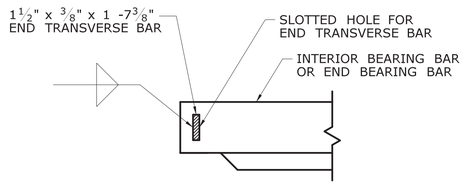

END TRANSVERSE BAR ATTACHMENT
CATCH BASIN GRATE TYPE A AND B

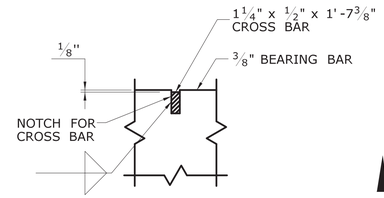

CROSS BAR ATTACHMENT
CATCH BASIN GRATE TYPE B

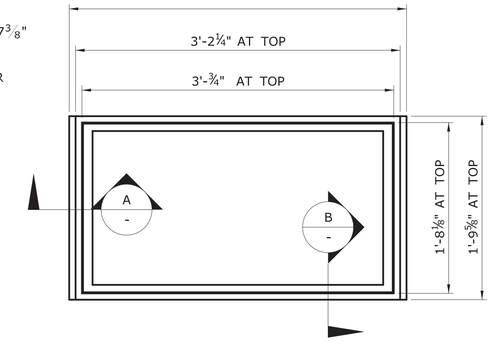

PLAN

GENERAL NOTES:

1. STEEL OR CAST IRON SHALL BE USED FOR FRAMES. STEEL SHALL BE USED FOR TYPE "A" AND "B" GRATES.
2. TYPE "A" GRATES SHALL BE USED ON ALL ROADWAYS WHERE BICYCLE TRAFFIC IS ALLOWED OR ON HEAVY DUTY LOCK DOWN TOPS AS DIRECTED BY THE ENGINEER.
3. TYPE "B" GRATES SHALL BE USED ON ALL LIMITED ACCESS HIGHWAYS, RAMPS AND WHERE BICYCLE TRAFFIC IS NOT ALLOWED OR AS DIRECTED BY THE ENGINEER.
4. DO NOT GALVANIZE CAST IRON FRAMES.
5. DIMENSIONAL TOLERANCES SHALL BE ± 1/16 INCH.
6. ALL STEEL BARS SHALL BE WELDED AT ALL INTERSECTIONS.

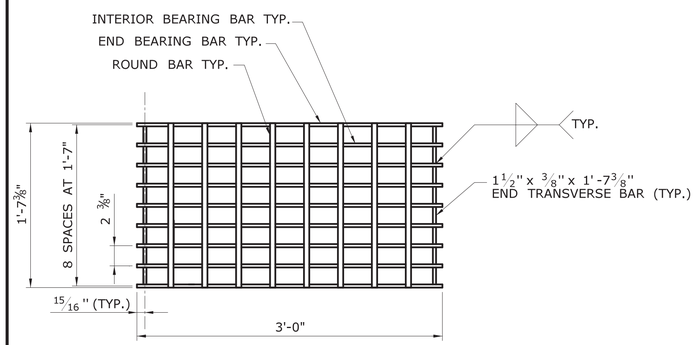

PLAN

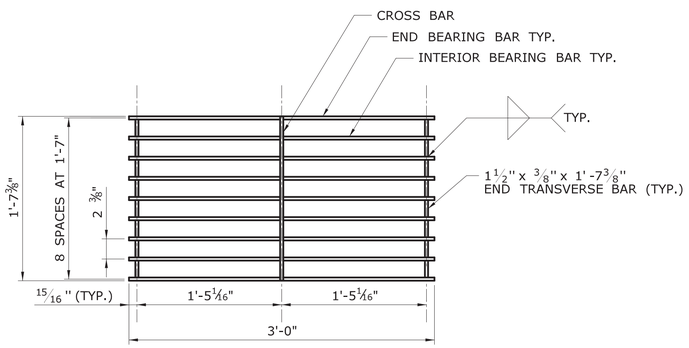

PLAN

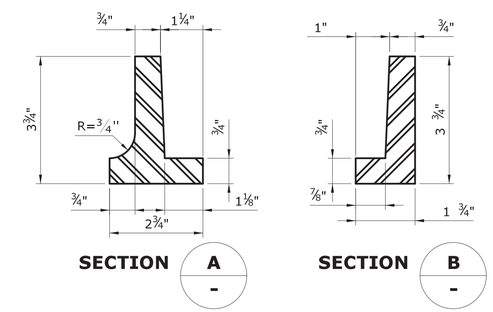

SECTION A **SECTION B**

CAST IRON FRAME ALTERNATE

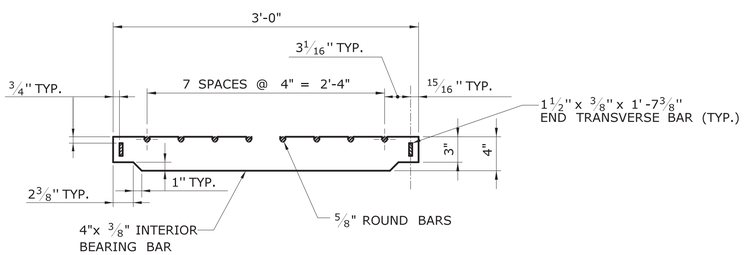

ELEVATION- INTERIOR BEARING BAR

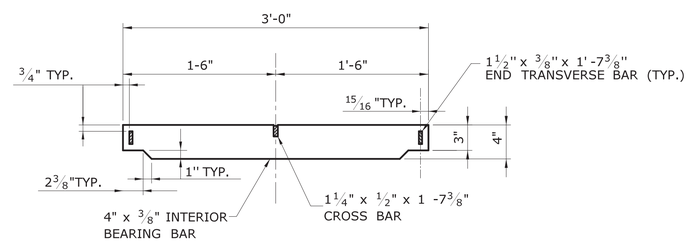

ELEVATION- INTERIOR BEARING BAR

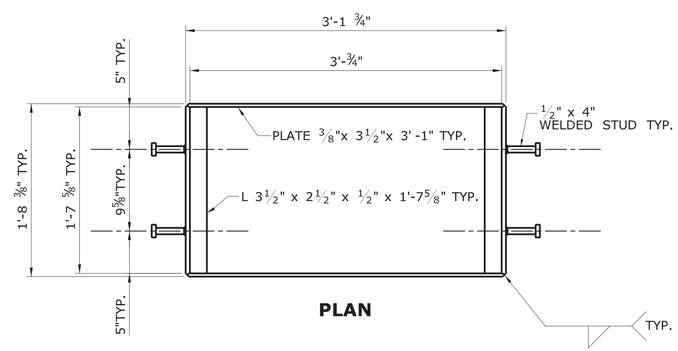

PLAN

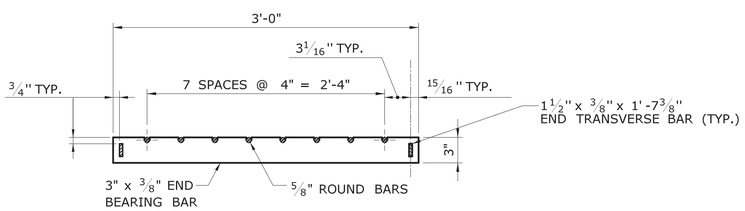

ELEVATION- END BEARING BAR
CATCH BASIN GRATE TYPE A

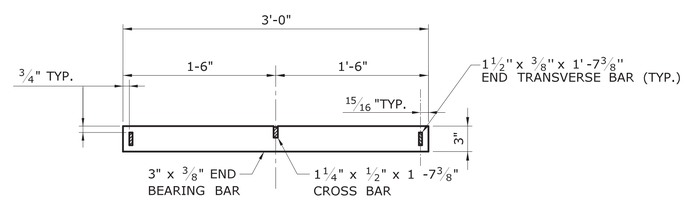

ELEVATION- END BEARING BAR
CATCH BASIN GRATE TYPE B

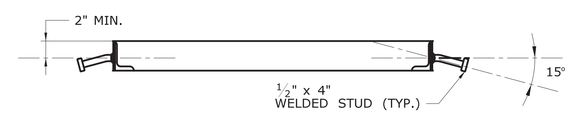

WELDED STUD ANCHOR DETAILS
STEEL FRAME

	NOT TO SCALE ####	SIGNATURE BLOCK: OFFICE OF ENGINEERING 2800 BERLIN TURNPIKE NEWINGTON, CT 06111	SUBMITTED BY: Leo Fontaine, P.E. 2020.07.08 09:25:23-04'00'	APPROVED BY: James Fallon, P.E.	STATE OF CONNECTICUT DEPARTMENT OF TRANSPORTATION	CTDOT STANDARD SHEET	STANDARD SHEET TITLE: CATCH BASIN FRAMES AND GRATES	STANDARD SHEET NO.: HW-586_08

PLOTTED DATE: 6/30/2020

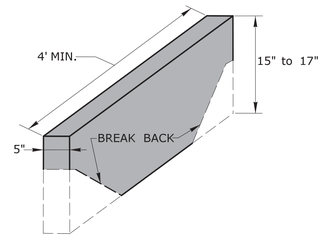

STONE CURBING

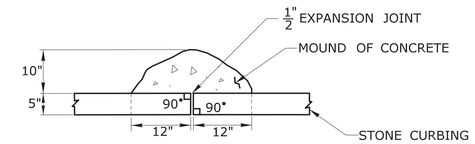

PLAN

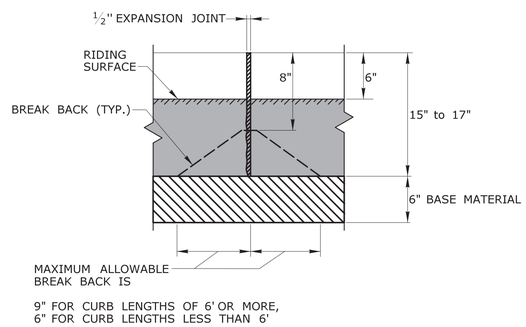

FRONT ELEVATION

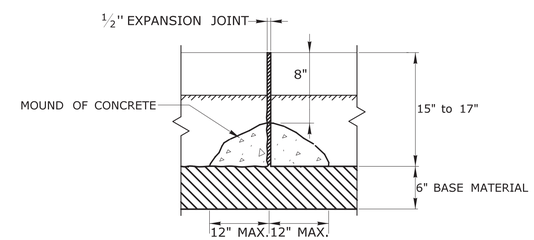

BACK ELEVATION

MOUND OF CONCRETE AT ALL JOINTS FOR STONE CURBING

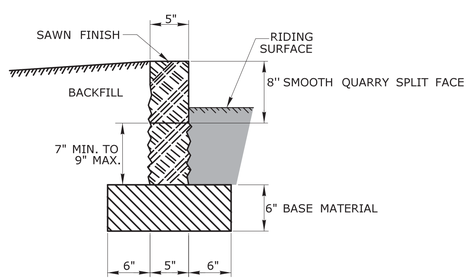

SECTION

	NOT TO SCALE ####	SIGNATURE BLOCK: OFFICE OF ENGINEERING 2800 BERLIN TURNPIKE NEWINGTON, CT 06111	SUBMITTED BY: Leo Fontaine, P.E. 2020.07.08 09:33:33-04'00'	APPROVED BY: James Fallon, P.E. Digitally signed by James Fallon, P.E. DN: C=US, E=James.Fallon@ct.gov, O=Connecticut Fallon, P.E., OU=Bureau of Engineering and Construction, OU=Manager of Facilities & Transit, OU=Bureau of Engineering and Construction, OU=Engineering Unit Leader, CN=James Fallon, P.E. Location: Hartford, Connecticut, United States Date: 2020.07.14 08:54:55-04'00'	STATE OF CONNECTICUT DEPARTMENT OF TRANSPORTATION	CTDOT STANDARD SHEET	STANDARD SHEET TITLE: STONE CURBING	STANDARD SHEET NO.: HW-813_02

PLOTTED DATE: 7/1/2020

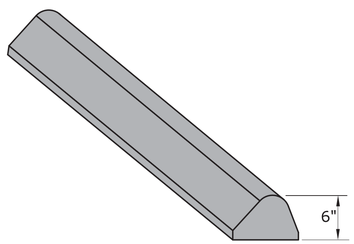

BITUMINOUS CONCRETE LIP CURBING
(6" HIGH)

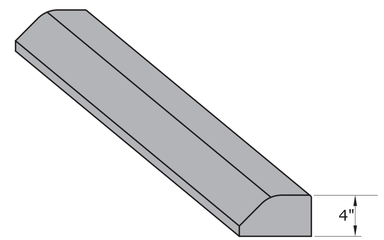

BITUMINOUS CONCRETE PARK CURBING
(4" HIGH)

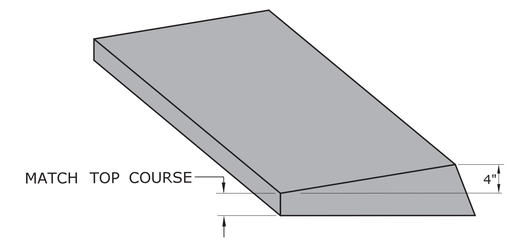

BITUMINOUS CONCRETE BERM CURBING
(4" HIGH)

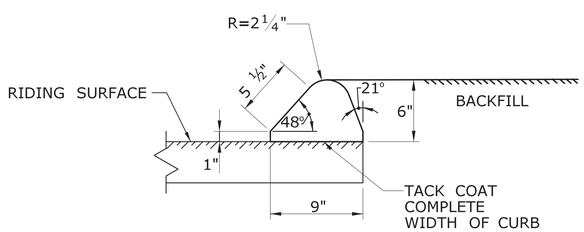

SECTION

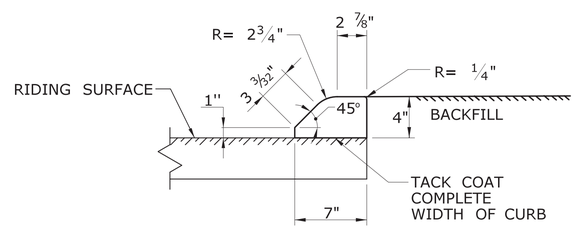

SECTION

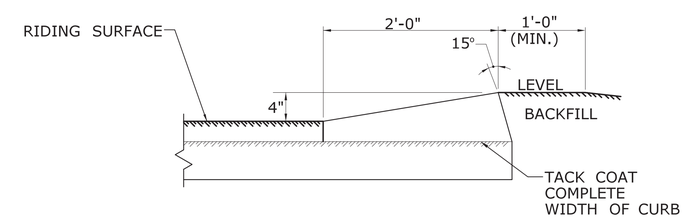

SECTION

	NOT TO SCALE ####	SIGNATURE BLOCK: OFFICE OF ENGINEERING 2800 BERLIN TURNPIKE NEWINGTON, CT 06111	SUBMITTED BY: Leo Fontaine, P.E. 2020.07.08 09:34:54-04'00'	APPROVED BY: James Fallon, P.E.	STATE OF CONNECTICUT DEPARTMENT OF TRANSPORTATION	CTDOT STANDARD SHEET	STANDARD SHEET TITLE: BITUMINOUS CONCRETE CURBING	STANDARD SHEET NO.: HW-815_01

PLOTTED DATE: 7/7/2020

GENERAL NOTES:

1. ALTERNATE DESIGNS FOR LIFTING KEYS, HOLES OR OTHER HANDLING DEVICES MAY BE SUBMITTED TO THE ENGINEER FOR APPROVAL.
2. EXPECTED PERMANENT DYNAMIC DEFLECTION IS 3'-6" (1148) BASED ON TL-3 CRASH TESTS WITH 240' (73152) OF TPCBC.

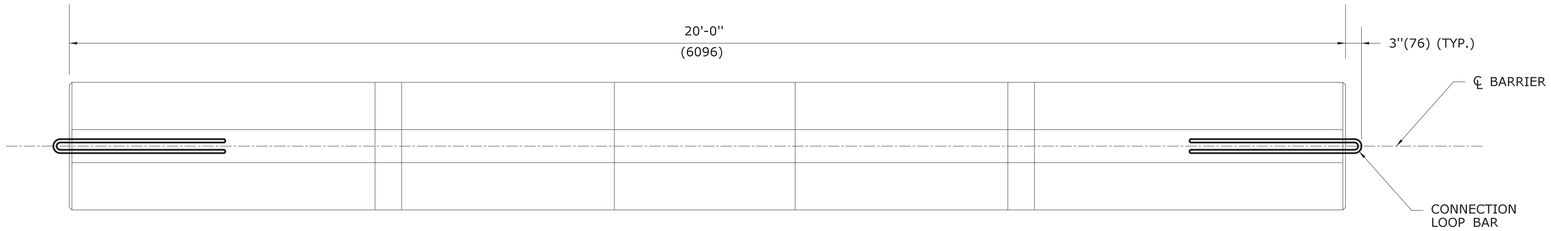

PLAN

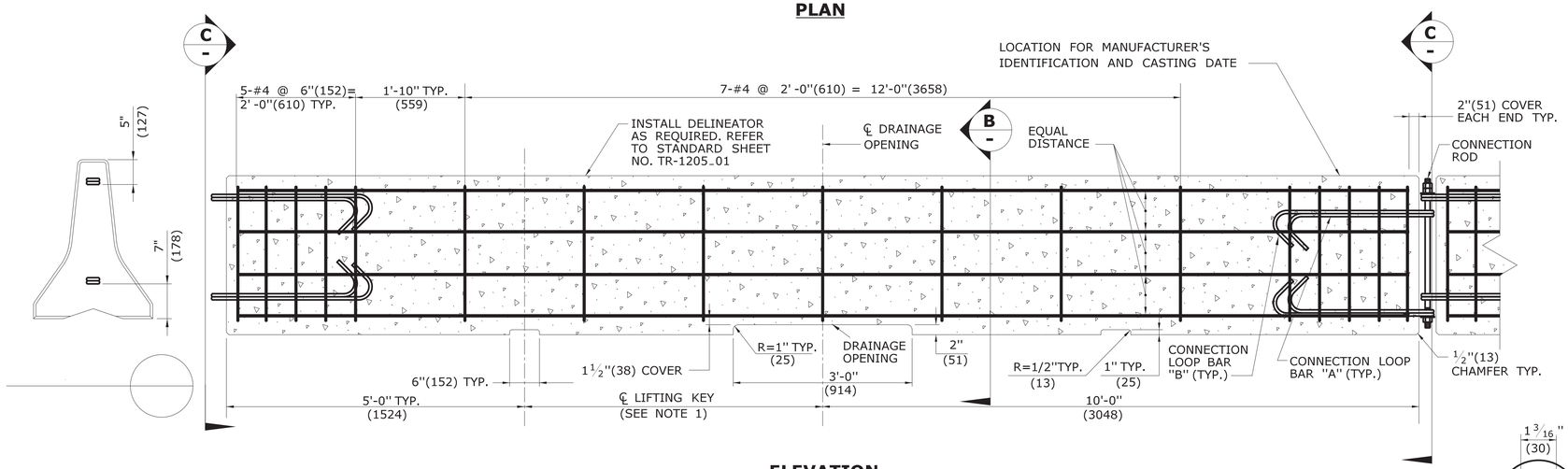

ELEVATION

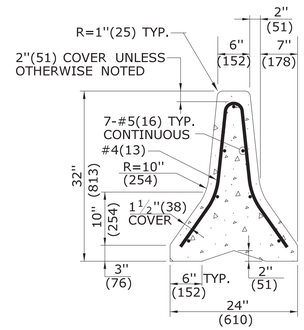

SECTION B -

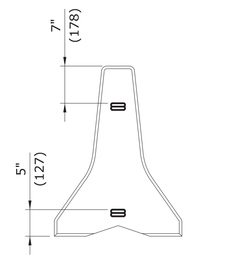

END VIEW C -

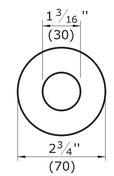

WASHER DETAIL

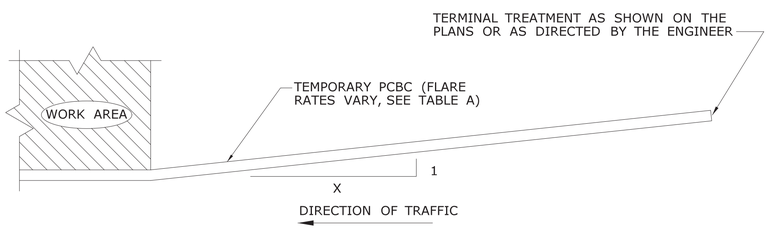

PLAN - TYPICAL INSTALLATION

TABLE A

FLARE RATES

* SPEED	FLARE RATE (X : 1)
≤ 30MPH(48KPH)	4 : 1
> 30MPH(48KPH) <45MPH(72KPH)	6 : 1
≥ 45MPH(72KPH) NON-LIMITED ACCESS HIGHWAYS	8 : 1
ALL LIMITED ACCESS HIGHWAYS	10 : 1

* DESIGN SPEED THROUGH THE WORK AREA.

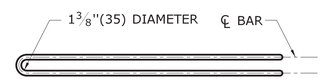

PLAN

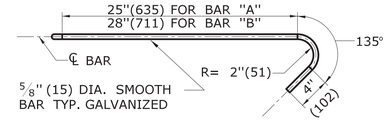

ELEVATION

BAR "A" = 6'-0"(1829) TOTAL
BAR "B" = 6'-6"(1981) TOTAL

CONNECTION LOOP BAR

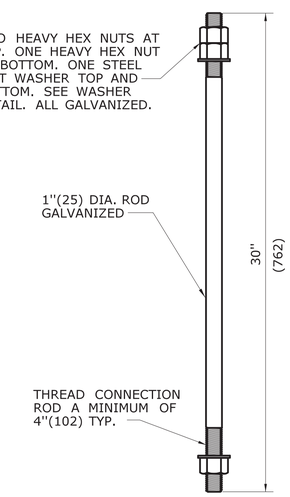

CONNECTION ROD

ALL METRIC DIMENSIONS ARE IN MILLIMETERS (mm) UNLESS OTHERWISE NOTED.

	NOT TO SCALE ####	SIGNATURE BLOCK: OFFICE OF ENGINEERING 2800 BERLIN TURNPIKE NEWINGTON, CT 06111	SUBMITTED BY: Leo Fontaine, P.E. 2020.07.08 09:56:23-04'00'	APPROVED BY: James Fallon, P.E. 2020.07.15 09:55:49-04'00'	STATE OF CONNECTICUT DEPARTMENT OF TRANSPORTATION	CTDOT STANDARD SHEET	STANDARD SHEET TITLE: TEMPORARY PRECAST CONCRETE BARRIER CURB	STANDARD SHEET NO.: HW-822_01

PLOTTED DATE: 7/7/2020

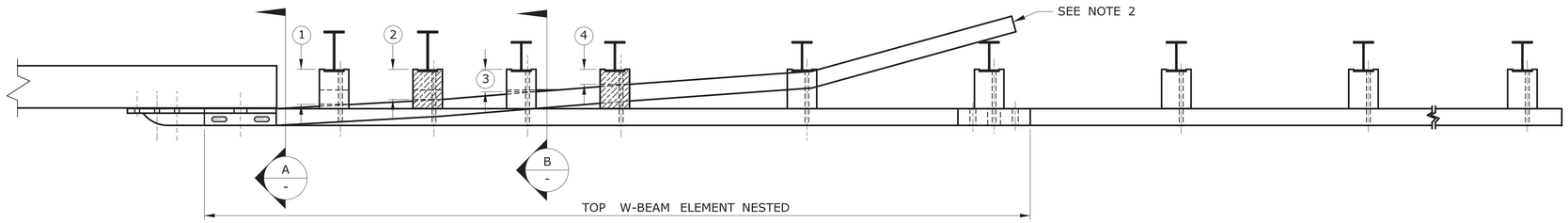

PLAN

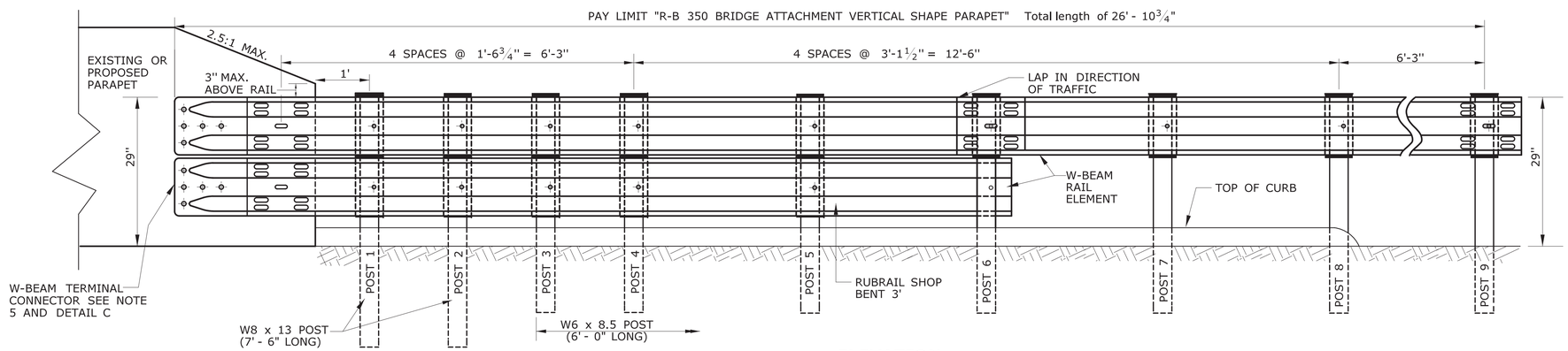

ELEVATION

GENERAL NOTES:

1. RUBRAIL BLOCKOUTS FOR POSTS 1 THROUGH 4 ARE ATTACHED TO POST AND RAIL WITH A ⅝" BUTTONHEAD BOLTS (SEE CHART FOR BOLT LENGTH). RUBRAIL ONLY IS ATTACHED TO POST 5 WITH A ⅝" x 1¼" BUTTONHEAD BOLT.
2. THE RUBRAIL SHALL BE SHOP BENT IN THE LAST 3' TO FACILITATE INSTALLATION. DO NOT ATTACH RUBRAIL TO BACK OF POST 6.
3. ANCHORAGE:
   (A) AT EXISTING PARAPETS EACH W-BEAM TERMINAL CONNECTOR SHALL BE ANCHORED USING FOUR ⅞" x 12" CHEMICALLY ANCHORED BOLTS WITH WASHERS OR AS DETAILED ON STRUCTURE SHEETS. MAXIMUM BOLT PROJECTION BEYOND THE NUT SHALL BE ½". THE 12" MINIMUM LENGTH OF CHEMICALLY ANCHORED BOLTS SHALL INCLUDE A MINIMUM EMBEDMENT DEPTH OF 10" INTO SUITABLY REINFORCED CONCRETE OR AS RECOMMENDED BY THE MANUFACTURER OF BONDING MATERIAL.
   (B) FOR NEW PARAPETS OR BARRIERS, THE W-BEAM TERMINAL CONNECTORS SHALL BE ANCHORED AS DETAILED ON THE STRUCTURE SHEETS.
4. ADDITIONAL BLOCKOUTS WITH POSTS 1 THROUGH 6 SHOULD BE AVOIDED.
5. FOR SINGLE DIRECTION ROADWAY:
   INSTALL W-BEAM TERMINAL CONNECTOR BETWEEN NESTED GUIDE RAIL ELEMENTS.
   FOR DUAL DIRECTION ROADWAY FOR APPROACHING TRAFFIC:
   INSTALL W-BEAM TERMINAL CONNECTOR BETWEEN NESTED GUIDE RAIL ELEMENTS.
   FOR TRAILING END:
   INSTALL W-BEAM TERMINAL CONNECTOR OUTSIDE OF THE NESTED GUIDE RAIL ELEMENTS.
6. MINIMUM RAIL HEIGHT FOR NEW CONSTRUCTION SHALL BE 29" +/- 1".
7. USE MODIFIED 4" BITUMINOUS CONCRETE PARK CURBING REDUCED TO A 3 INCH REVEAL BENEATH THE RUBRAIL IF CURBING IS REQUIRED.

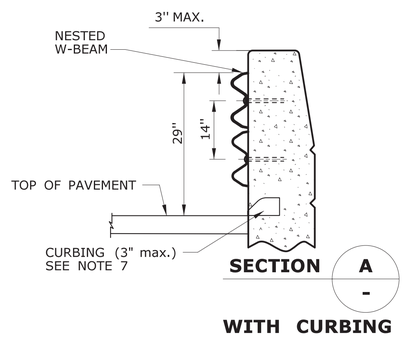

WITH CURBING

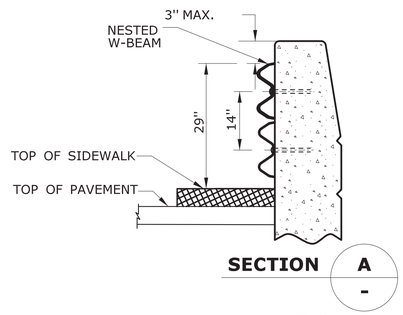

WITH SIDEWALK

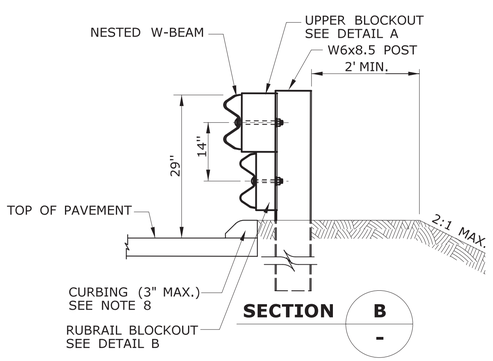

WITH CURBING

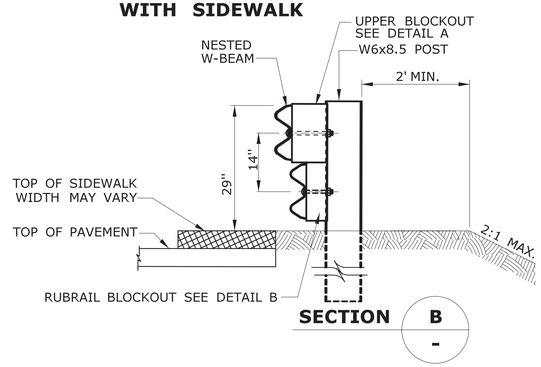

WITH SIDEWALK

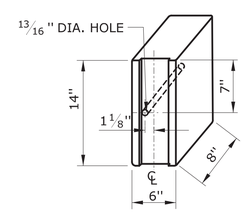

DETAIL A

UPPER BLOCKOUT

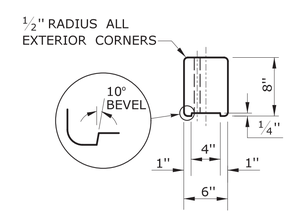

TOP

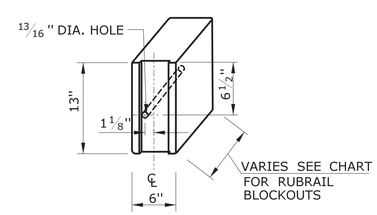

DETAIL B

RUBRAIL BLOCKOUT

RUBRAIL BLOCKOUTS 13" HIGH x 6" WIDE		
POST	THICKNESS	BOLT LENGTH
1	7"	9"
2	6"	8"
3	4½"	6"
4	3"	5"

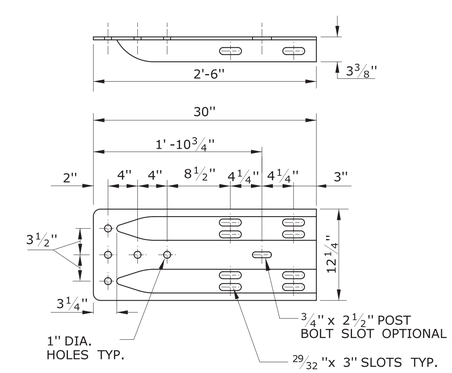

DETAIL C

W-BEAM TERMINAL CONNECTOR

CLASS B TYPE II

SEE NOTE 5

	NOT TO SCALE ####	SIGNATURE BLOCK: OFFICE OF ENGINEERING 2800 BERLIN TURNPIKE NEWINGTON, CT 06111	SUBMITTED BY: Leo Fontaine, P.E. 2020.07.08 10:00:15-04'00'	APPROVED BY: James Fallon, P.E. 2020.07.15 09:58:42-04'00'	STATE OF CONNECTICUT DEPARTMENT OF TRANSPORTATION	CTDOT STANDARD SHEET	STANDARD SHEET TITLE: R-B 350 BRIDGE ATTACHMENT TO VERTICAL SAFETY SHAPE PARAPET	STANDARD SHEET NO.: HW-910_07

PLOTTED DATE: 7/1/2020

GENERAL NOTES:

1. J-HOOK BOLTS MAY BE SUBSTITUTED FOR BOTTOM PLATE ANCHORAGE IN CONCRETE END ANCHORS USING THE SAME SIZE, STRENGTH, AND LENGTH AS NOTED ON THE PLANS.
2. INSTALLATION OF RADII DIFFERENT THAN WHAT IS SHOWN IN DETAIL "C" FOR R-B END ANCHORAGE TYPE II MUST BE APPROVED BY THE ENGINEER.

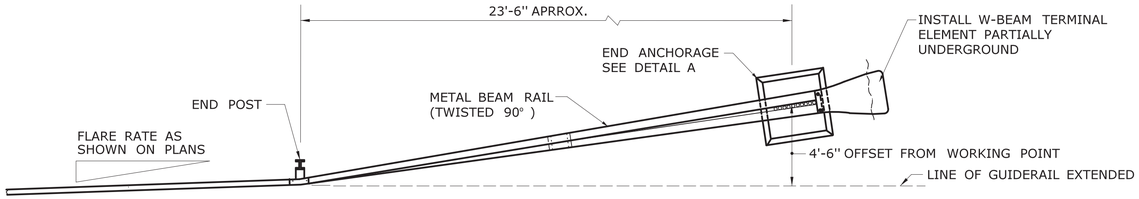

PLAN

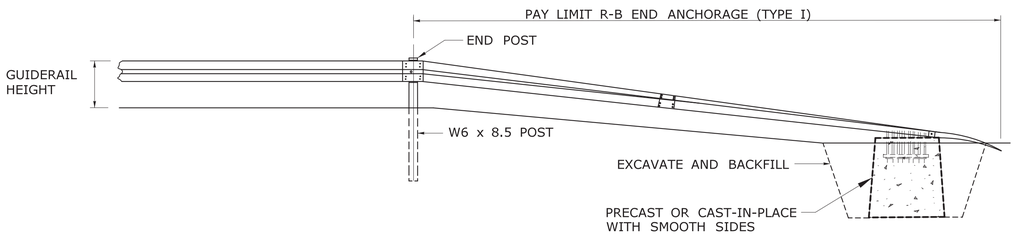

ELEVATION

R-B END ANCHORAGE TYPE I

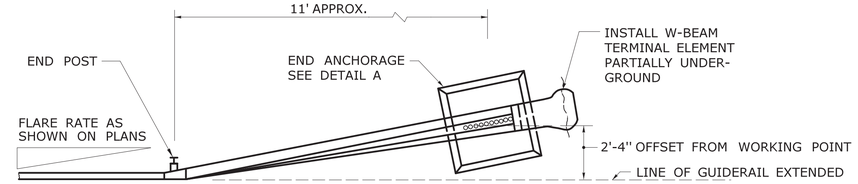

PLAN

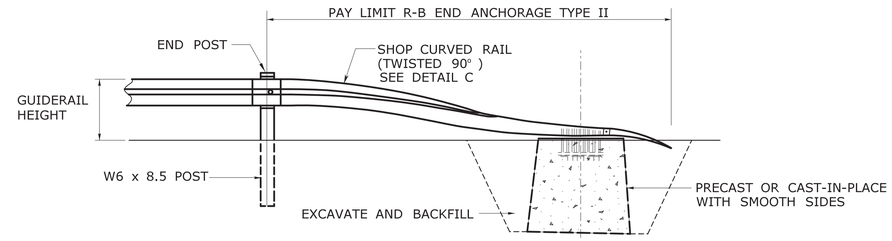

ELEVATION

R-B END ANCHORAGE TYPE II

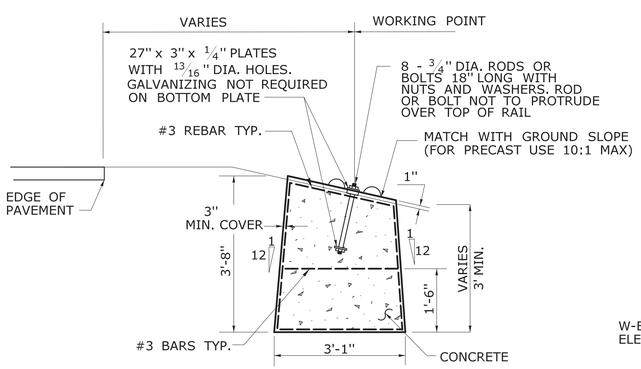

ELEVATION

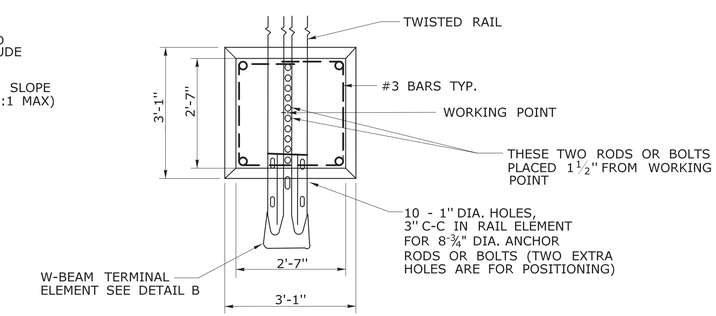

PLAN

DETAIL A
ROADSIDE CONCRETE END ANCHOR

SEE NOTE 2

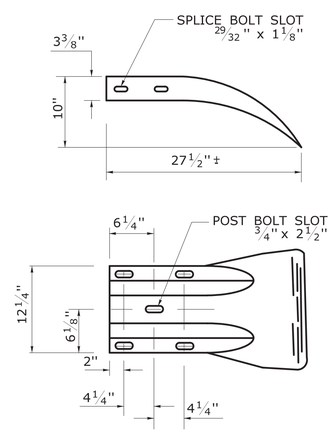

DETAIL B
W-BEAM TERMINAL ELEMENT

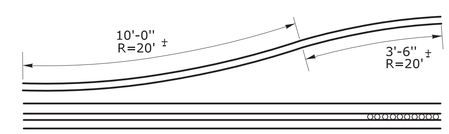

DETAIL C
SHOP CURVED RAIL

SEE NOTE 2

	NOT TO SCALE ####	SIGNATURE BLOCK: OFFICE OF ENGINEERING 2800 BERLIN TURNPIKE NEWINGTON, CT 06111	SUBMITTED BY: Leo Fontaine, P.E. 2020.07.08 10:28:15-04'00'	APPROVED BY: James Fallon, P.E. 2020.07.15 10:19:27-04'00'	STATE OF CONNECTICUT DEPARTMENT OF TRANSPORTATION	CTDOT STANDARD SHEET	STANDARD SHEET TITLE: R-B END ANCHORAGE TYPE I AND II	STANDARD SHEET NO.: HW-911_01

PLOTTED DATE: 7/1/2020

GENERAL NOTES:

1. INSTALL PULL POST ASSEMBLIES AT ALL CHANGES IN VERTICAL TO HORIZONTAL OF 10 DEGREES OR MORE.
2. ALL POSTS WILL BE CAPPED.
3. WHERE ROCK IS ENCOUNTERED, IT SHALL BE DRILLED AND THE POSTS SET IN MORTAR.
4. FENCE SHALL BE PLACED WITH FABRIC FACING OUTSIDE HIGHWAY RIGHT OF WAY OR AS DIRECTED BY THE ENGINEER.
5. SEE HW-913_01b FOR CHAIN LINK FENCE HARDWARE.

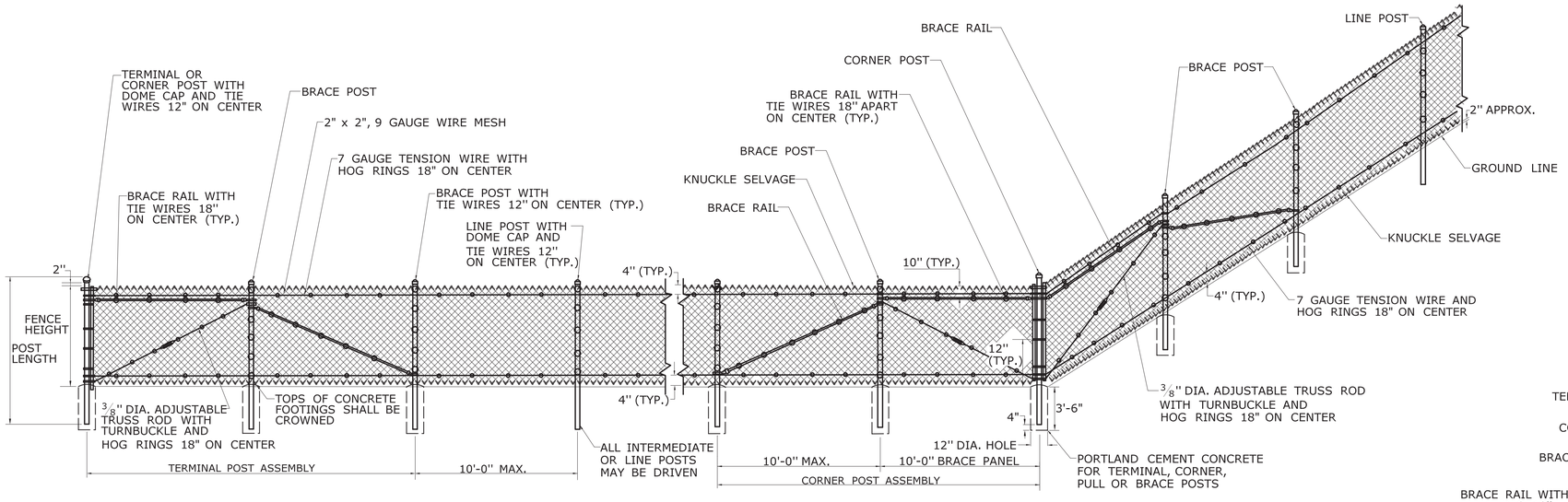

CHAIN LINK FENCE WITH TOP TENSION WIRE

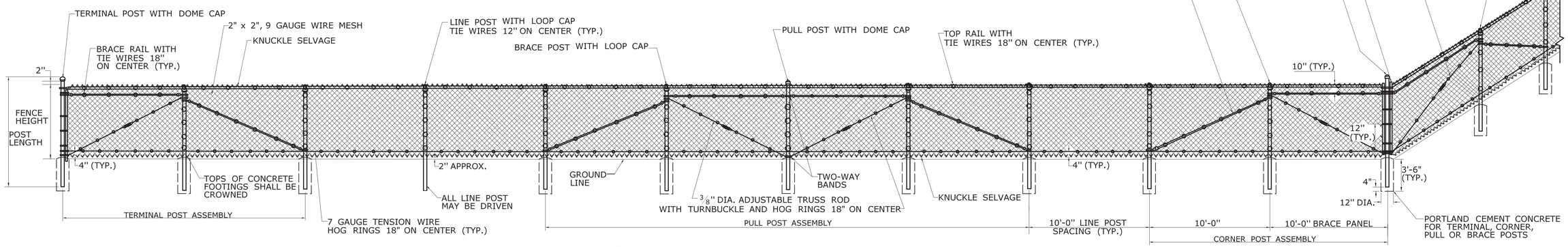

CHAIN LINK FENCE WITH TOP BRACE RAIL AND INTERMEDIATE OR BOTTOM TENSION WIRE

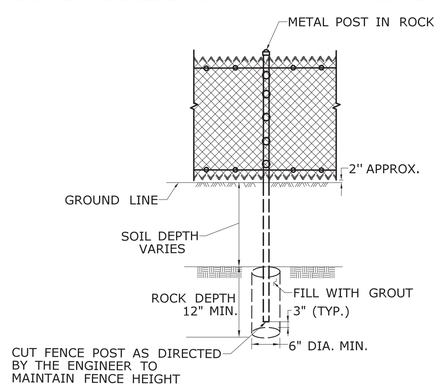

METAL POST IN ROCK

FENCE FABRIC HEIGHT	GROUP 1A ASTM F1083 SCH. 40 PIPE 50,000 PSI DIAMETER	GROUP 1C ASTM F1043 ELEC. RESISTANCE WELDED PIPE 50,000 PSI DIAMETER
LINE OR INTERMEDIATE POST		
UP TO 5'-0"	1 7/8"	1 7/8"
6'-0" TO 7'-0"	2 3/8"	2 3/8"
8'-0" TO 9'-0"	2 7/8"	2 7/8"
10'-0"	3 1/2"	3 1/2"
12'-0" OR HIGHER	4"	4"
TERMINAL, CORNER OR PULL POST		
UP TO 5'-0"	2 3/8"	2 3/8"
6'-0" TO 7'-0"	2 7/8"	2 7/8"
8'-0" TO 9'-0"	3 1/2"	3 1/2"
10'-0" OR HIGHER	4"	4"
TOP OR BRACE RAIL POSTS UP TO 6'-0"	1 5/8"	1 5/8"
POSTS HIGHER THAN 6'-0"	1 7/8"	1 7/8"

NOT TO SCALE

####

SIGNATURE BLOCK:

OFFICE OF ENGINEERING
2800 BERLIN TURNPIKE
NEWINGTON, CT 06111

SUBMITTED BY: Leo Fontaine, P.E. 2020.07.08 10:29:52-04'00'

APPROVED BY: James Fallon, P.E. 2020.07.15 10:20:40-04'00'

STATE OF CONNECTICUT
DEPARTMENT OF TRANSPORTATION

CTDOT STANDARD SHEET

STANDARD SHEET TITLE:

CHAIN LINK FENCE

STANDARD SHEET NO.:

HW-913_01a

PLOTTED DATE: 7/1/2020

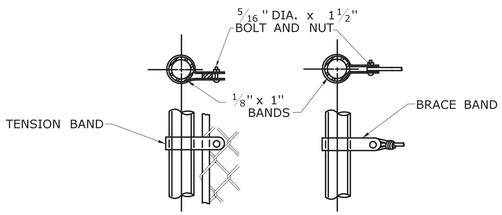

TENSION BAR TENSION WIRE

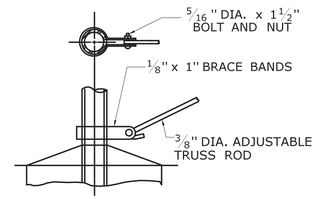

ADJUSTABLE TRUSS ROD

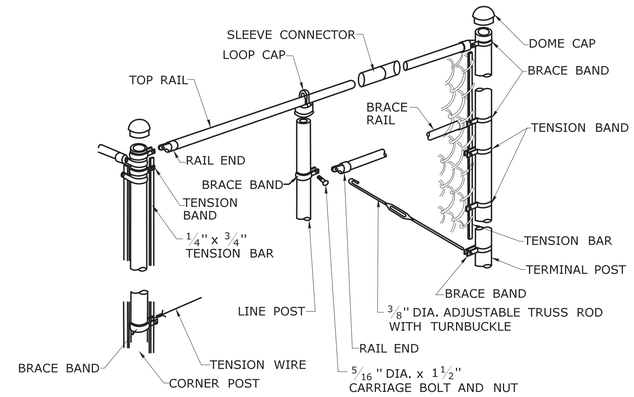

TOP RAIL / TRUSSED BRACE RAIL WITH BOTTOM TENSION WIRE

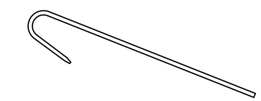

TIE WIRE

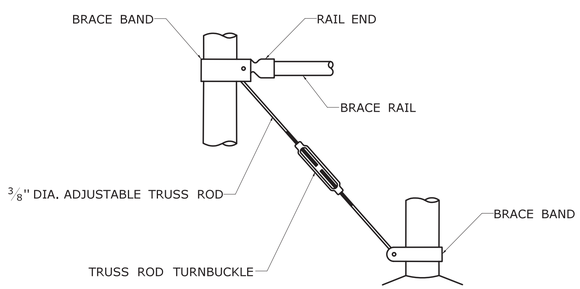

BRACE & TRUSS CONNECTIONS

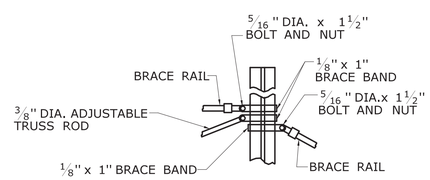

BRACE RAILS ATTACHMENT TO LINE POSTS

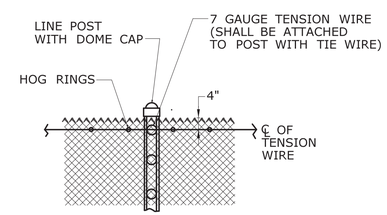

TENSION WIRE

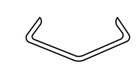

HOG RING

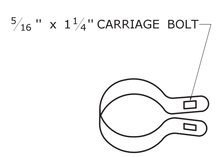

1/8" x 1" BRACE BAND

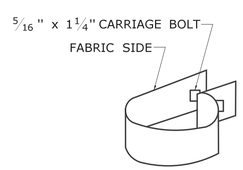

1/8" x 1" TENSION BAND

KNUCKLE SELVAGE

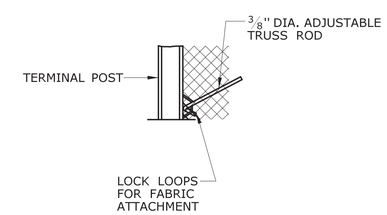

TRUSS ROD ATTACHMENT

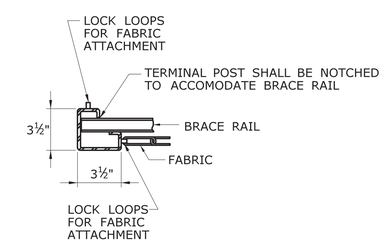

FABRIC AND BRACE RAIL ATTACHMENT

	NOT TO SCALE ####	SIGNATURE BLOCK: OFFICE OF ENGINEERING 2800 BERLIN TURNPIKE NEWINGTON, CT 06111	SUBMITTED BY: Leo Fontaine, P.E. 2020.07.08 10:30:09-04'00'	APPROVED BY: James Fallon, P.E. 2020.07.15 10:20:57-04'00'	STATE OF CONNECTICUT DEPARTMENT OF TRANSPORTATION	CTDOT STANDARD SHEET	STANDARD SHEET TITLE: CHAIN LINK FENCE HARDWARE	STANDARD SHEET NO.: HW-913_01b

PLOTTED DATE: 7/1/2020

GENERAL NOTES:

1. DRIVEWAY ENTRANCE SHALL BE A MINIMUM OF 12' WIDE, EXCLUDING CURBING WHEN PRESENT.
2. WELDED WIRE FABRIC MATS WITH REINFORCING AT CLOSER SPACING MAY BE USED.
3. SURFACE HMA S0.375 TO BE PLACED IN TWO EQUAL LIFTS FOR BOTH RESIDENTIAL AND COMMERCIAL DRIVEWAYS.

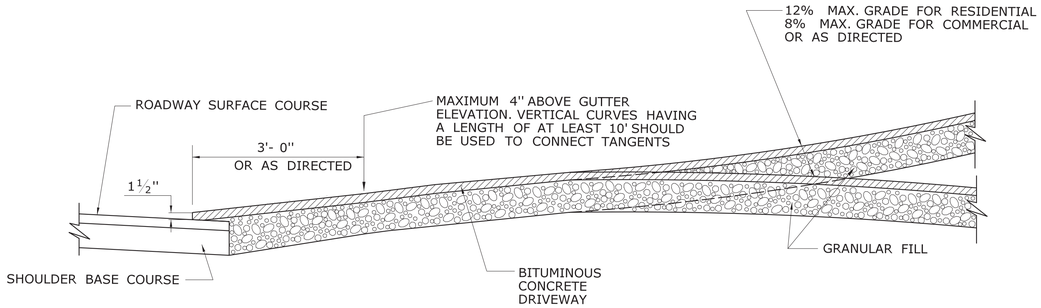

SECTION A

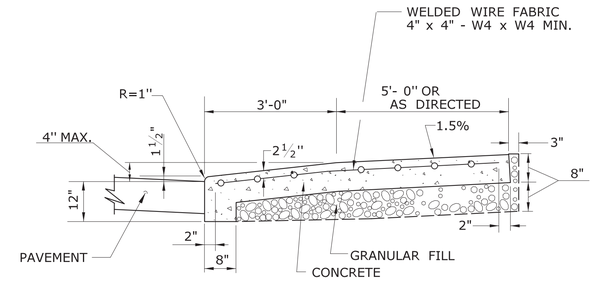

SECTION C

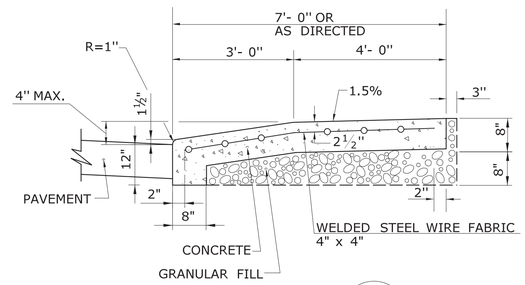

SECTION B

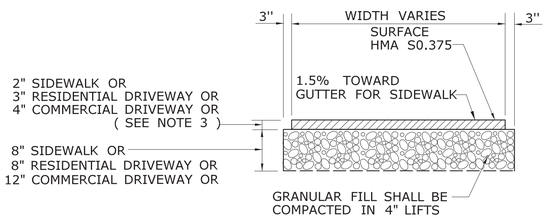

TYPICAL SECTION
BITUMINOUS CONCRETE
SIDEWALK AND DRIVEWAY

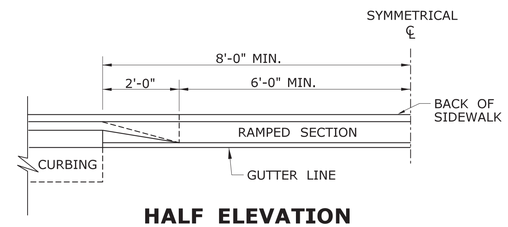

HALF ELEVATION

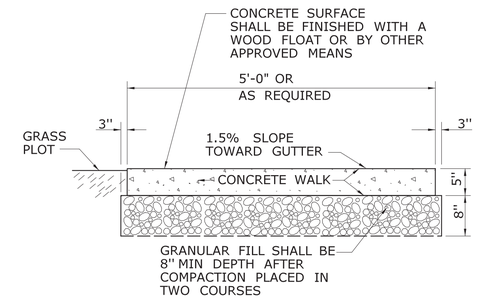

SECTION D

5' WIDE CONCRETE
SIDEWALK WITH GRASS PLOT

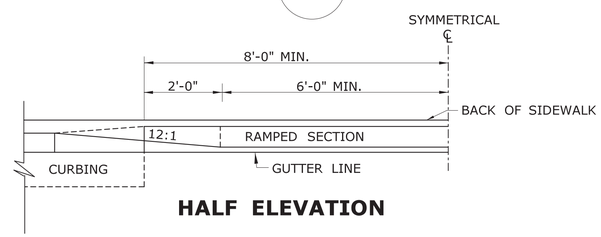

HALF ELEVATION

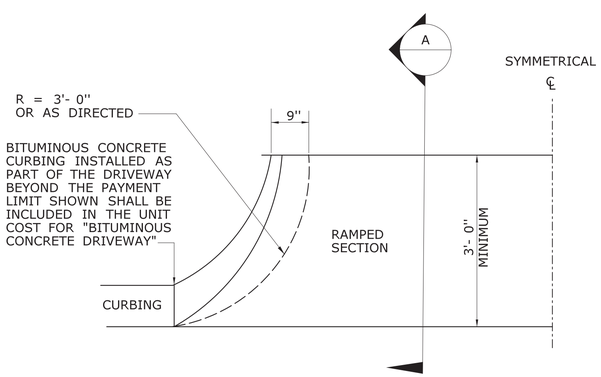

HALF BITUMINOUS CONCRETE
DRIVEWAY PLAN

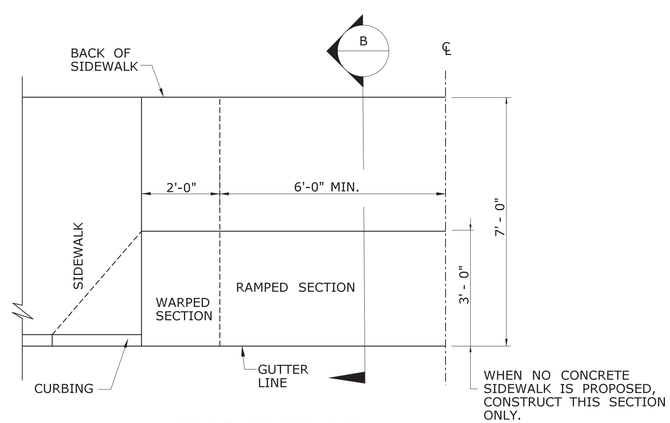

HALF PLAN OF
CONCRETE DRIVEWAY RAMP WHERE
SIDEWALK ADJOINS CURBING

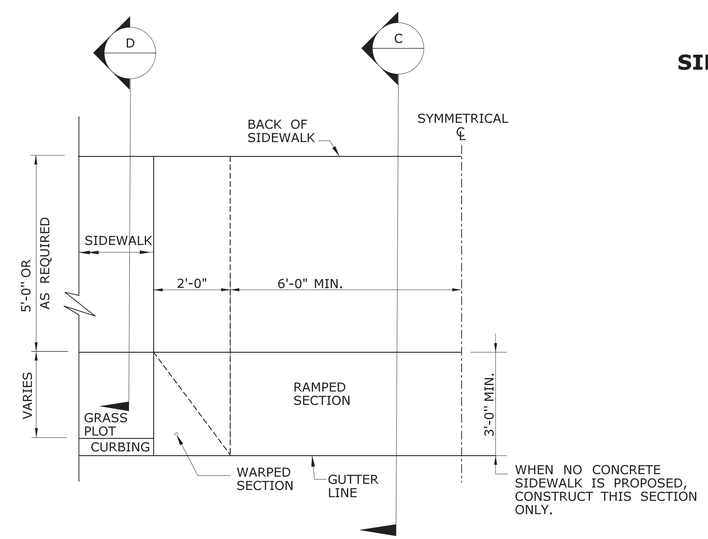

HALF PLAN OF
CONCRETE DRIVEWAY RAMP WHERE
CURB IS SEPARATED FROM
SIDEWALK BY GRASS PLOT

	NOT TO SCALE ####	SIGNATURE BLOCK: OFFICE OF ENGINEERING 2800 BERLIN TURNPIKE NEWINGTON, CT 06111	SUBMITTED BY: Leo Fontaine, P.E. 2020.07.08 10:32:47-04'00'	APPROVED BY: James Fallon, P.E. 2020.07.15 12:16:04-04'00'	STATE OF CONNECTICUT DEPARTMENT OF TRANSPORTATION	CTDOT STANDARD SHEET	STANDARD SHEET TITLE: DRIVEWAY RAMPS AND SIDEWALKS	STANDARD SHEET NO.: HW-921_01

PLOTTED DATE: 7/1/2020

DELINEATORS DE-1, DE-2, DE-3

INSTALLATION ON DELINEATOR POSTS

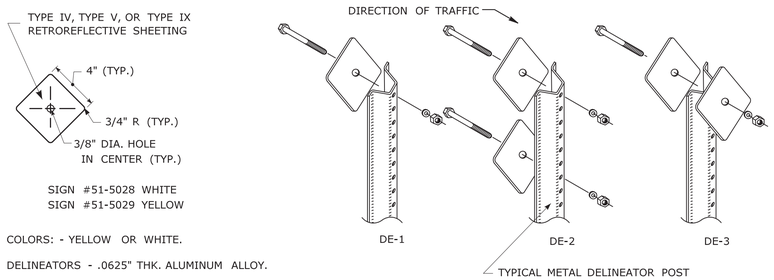

SIGN #51-5028 WHITE
SIGN #51-5029 YELLOW

COLORS: - YELLOW OR WHITE.

DELINEATORS - .0625" THK. ALUMINUM ALLOY.

FACE SHALL BE PRESSURE SENSITIVE, SELF ADHERING, TYPE IV, TYPE V, OR TYPE IX RETROREFLECTIVE SHEETING.

DELINEATORS SHALL BE FASTENED WITH 5/16" STAINLESS STEEL ASTM A-193 CLASS 1, GRADE B8 (TYPE 304) OR BETTER HEX HEAD BOLT (LENGTH AS REQUIRED), WASHER AND FIBER INSERT SELF LOCKING NUT, ON STANDARD METAL DELINEATOR POST.

INSTALLATION ON PERMANENT CONCRETE BARRIER, BRIDGE PARAPETS AND RETAINING WALLS

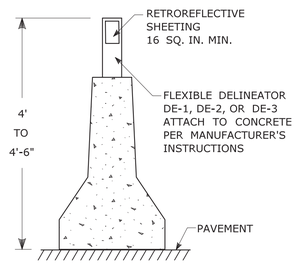

DELINEATORS DE-1, DE-2, DE-3 TO BE PAID FOR UNDER SECTION 12.05 DELINEATORS.

DELINEATORS DE-4, DE-4A, DE-5 FOR INSTALLATION ON METAL BRIDGE RAIL

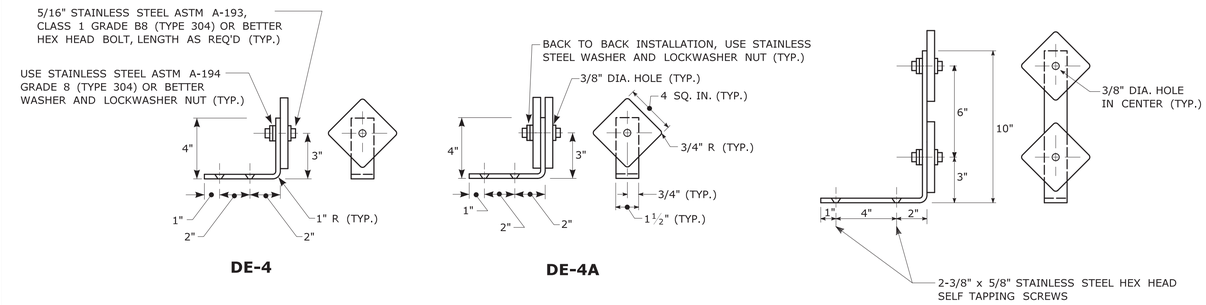

COLORS: - YELLOW OR WHITE.
DELINEATORS - .0625" THK. ALUMINUM ALLOY.
BRACKET - .125" THK. ALUMINUM ALLOY, AND SHALL CONFORM TO SPECIFICATION M.18.07-03 BRIDGE RAIL MOUNTING BRACKETS.
FACE SHALL BE PRESSURE SENSITIVE, SELF ADHERING, TYPE IV, TYPE V, OR TYPE IX RETROREFLECTIVE SHEETING.
USE STAINLESS STEEL WASHERS ON FACE OF DELINEATORS, 5/8" O.D. X 3/8" I.D. X .032" THK. (TYP.)

DELINEATORS TYPE DE-4, DE-4A, AND DE-5 TO BE PAID FOR UNDER SECTION 12.05 DELINEATORS.

TYPICAL MAINLINE & INTERCHANGE DELINEATION

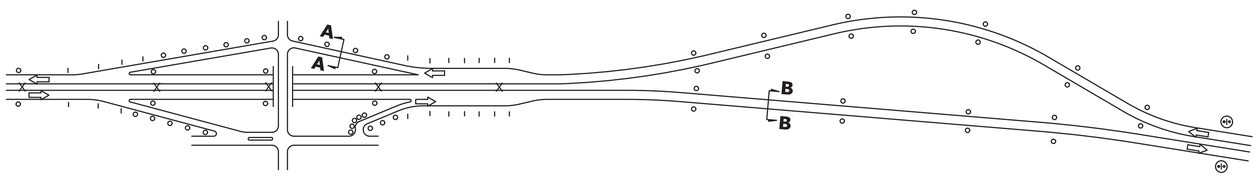

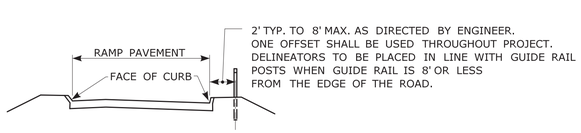

SECTION A-A

DELINEATOR PLACEMENT ON RAMPS
ON TANGENT SECTIONS - RIGHT SIDE OF RAMP
ON CURVED SECTIONS - BOTH SIDES OF CURVE

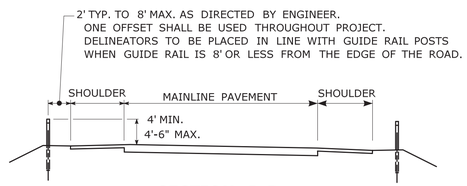

SECTION B-B

DELINEATOR PLACEMENT ON MAINLINE

DELINEATOR SPACING NOTES:

1) AT LOCATIONS WHERE THE MEDIAN WIDTH (BETWEEN SHOULDERS) IS 12' OR LESS, AND MEDIAN BEAM RAIL IS PRESENT, TYPE DE-3 DELINEATORS SHALL BE MOUNTED WITHIN THE MEDIAN BEAM RAIL.

2) SPACING ON MAINLINE EXPRESSWAY TANGENTS SHALL BE 400'.

3) SPACING ON MAINLINE EXPRESSWAY CURVES SHALL BE AS SPECIFIED IN TABLE 3F-1 OF THE MUTCD.

4) ON ACCELERATION AND DECELERATION LANES AND ON-RAMP TANGENT SECTIONS, DELINEATOR SPACING SHALL BE 100'.

5) ON CURVED PORTIONS OF RAMPS, DELINEATOR SPACING SHALL BE IN ACCORDANCE WITH TABLE 3F-1 OF THE MUTCD, BUT NOT TO EXCEED 100'.

LEGEND:

- DE-1 DELINEATORS OR DE-4 DELINEATOR ASSEMBLY
- DE-2 DELINEATORS OR DE-5 DELINEATOR ASSEMBLY
- X DE-3 DELINEATORS ASSEMBLY OR DE-4A DELINEATOR
- D10-1, 2, 3, OR 4 ASSEMBLY TO BE INSTALLED WHERE SHOWN ON PLANS OR AS DIRECTED BY THE ENGINEER.

COLOR APPLICATION, FOR DE-1 THRU DE-5

LEFT SIDE OF ALL ROADWAYS AND RAMPS - YELLOW
RIGHT SIDE OF ALL ROADWAYS AND RAMPS - WHITE

MUTCD TABLE 3F-1 APPROXIMATE SPACING FOR DELINEATORS ON HORIZONTAL CURVES

RADIUS (R) OF CURVE (feet)	APPROXIMATE SPACING (S) ON CURVE (feet)
50	20
115	25
180	35
250	40
300	50
400	55
500	65
600	70
700	75
800	80
900	85
1,000	90

DISTANCE IN FEET WERE ROUNDED TO THE NEAREST 5 FEET. SPACING FOR SPECIFIC RADII MAY BE INTERPOLATED FROM TABLE. THE MINIMUM SPACING SHOULD BE 20 FEET. THE SPACING ON CURVES SHOULD NOT EXCEED 300 FEET. IN ADVANCE OF OR BEYOND A CURVE, AND PROCEEDING AWAY FROM THE END OF THE CURVE, THE SPACING OF THE FIRST DELINEATOR IS 2S, THE SECOND IS 3S, AND THE THIRD 6S BUT NOT TO EXCEED 300 FEET.

S REFERS TO THE DELINEATOR SPACING FOR SPECIFIC RADII COMPUTED FROM THE FORMULA: $S=3\sqrt{R-50}$.

DELINEATORS DE-7, DE-7A, DE-7B, DE-7D FOR INSTALLATION ON TEMPORARY PRECAST CONCRETE BARRIER CURB AND TEMPORARY PRECAST CONCRETE BARRIER CURB (STRUCTURE)

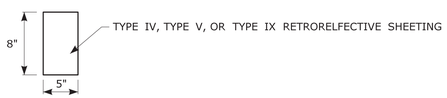

DE-7 ONE WAY WHITE
DE-7A ONE WAY YELLOW
DE-7B TWO WAY YELLOW
DE-7D TWO WAY WHITE
TEMPORARY PRECAST CONCRETE BARRIER DELINEATORS ARE TO BE FABRICATED OF ALUMINUM, STEEL, PLASTIC, OR OF A MATERIAL APPROVED BY THE ENGINEER AND MOUNTED IN THE CENTER OF EACH SECTION OF TEMPORARY BARRIER AS REQUIRED AND PER MANUFACTURER'S INSTRUCTIONS.

SPACING FOR TEMPORARY BARRIER CURB DELINEATORS:

ON THE LEADING TAPERED SECTION - EVERY 20',
ON THE FIRST 100' OF THE PARALLEL SECTION - EVERY 20',
ON THE REMAINING LENGTH - EVERY 100', MINIMUM OF 2 IF LESS THAN 100',
ALTERNATING ONE WAY TRAFFIC - EVERY 20',
ALL OTHER ROADWAYS SHALL BE DELINEATED IN ACCORDANCE WITH MUTCD.

DELINEATORS DE-7, DE-7A, DE-7B, AND DE-7D TO BE PAID FOR UNDER SECTION 12.05 DELINEATORS.

ATTENUATOR REFLECTORS SIGN #40-4266

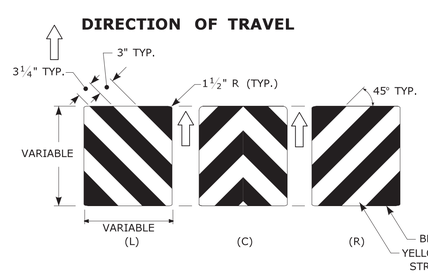

THIS SHEETING WITHOUT A SUBSTRATE TO BE INSTALLED ON THE NOSE OF THE IMPACT ATTENUATOR WITH ADHESIVE IN ACCORDANCE WITH THE MANUFACTURER'S RECOMMENDATIONS.
THE SHEETING SHALL COVER THE NOSE OF THE IMPACT ATTENUATOR.
ON A CURVED NOSE, THE WIDTH OF THE SHEETING SHALL EXTEND 1" BEYOND THE POINT OF CURVATURE ON EACH SIDE OF THE NOSE.
THE HEIGHT AND WIDTH OF THE SHEETING VARIES DEPENDING ON THE SIZE OF THE NOSE OF THE IMPACT ATTENUATOR.

ATTENUATOR REFLECTOR TO BE PAID FOR UNDER SECTION 18.0 IMPACT ATTENUATOR

TYPE 3 OBJECT MARKERS SIGN #41-4267

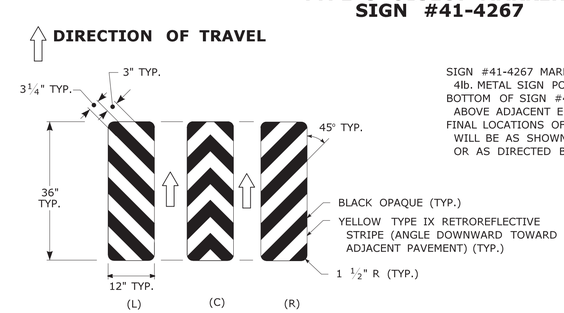

SIGN #41-4267 MARKER MOUNTED ON 4lb. METAL SIGN POST.
BOTTOM OF SIGN #41-4267 TO BE 4' ABOVE ADJACENT EDGE OF PAVEMENT.
FINAL LOCATIONS OF SIGN #41-4267 MARKERS WILL BE AS SHOWN ON THE PLAN OR AS DIRECTED BY THE ENGINEER.

TYPE 3 OBJECT MARKER TO BE PAID FOR UNDER SECTION 12.08 SIGN FACE SHEET ALUMINUM

REV.	DATE	REVISION DESCRIPTION
5	8-2018	INCLUDED DE-7D AND REMOVED DE-7C, DE-9, AND DE-10.
4	4-2017	REVISED ATTENUATOR REFLECTOR AND TYPE 3 OBJECT MARKERS.
3	8-2015	UPDATED PER MUTCD AND FORM 816 JAN 2015 REVISION.
2	2-2011	MINOR REVISIONS.
1	1-2010	INCLUDED DETAILS IN D10-1, D10-2, D10-3 DELINEATORS.

THE INFORMATION, INCLUDING ESTIMATED QUANTITIES OF WORK, SHOWN ON THESE SHEETS IS BASED ON LIMITED INVESTIGATIONS BY THE STATE AND IS IN NO WAY WARRANTED TO INDICATE THE CONDITIONS OF ACTUAL QUANTITIES OF WORK WHICH WILL BE REQUIRED.

Plotted Date: 8/10/2018

NOT TO SCALE

STATE OF CONNECTICUT
DEPARTMENT OF TRANSPORTATION

Filename: TR-1205_01_1_2018.dgn Model: TR-1205_01

SUBMITTED BY: NAME/DATE/TIME: Mark F. Makuch, P.E. 2018.08.17 09:04:28-04'00'
APPROVED BY: NAME/DATE/TIME: Mark F. Carlino, P.E. 2018.08.21 07:47:46-04'00'

CTDOT STANDARD SHEET

OFFICE OF ENGINEERING

STANDARD SHEET TITLE:

DELINEATION, DELINEATORS AND OBJECT MARKER DETAILS

STANDARD SHEET NO.: TR-1205_01

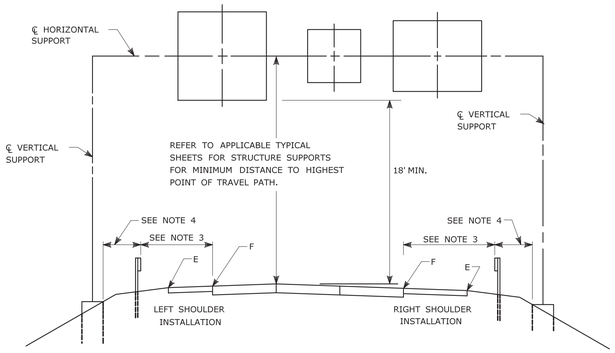

TYPICAL PLACEMENT OF OVERHEAD SIGNS ON SIGN SUPPORTS

NOTES:

1) FOR PLACEMENT OF CANTILEVER SIGN SUPPORT USE APPLICABLE PORTION OF ABOVE DETAIL.
2) BARRIER SYSTEMS MAY BE REQUIRED FOR BOTH SIDES OF SUPPORTS IN MEDIANS.
3) IMPACT PROTECTION SHALL BE PROVIDED FOR THE SIGN SUPPORTS LOCATED WITHIN CLEAR ZONE.
4) SIGN SUPPORT FOUNDATIONS SHALL BE LOCATED OUTSIDE OF BARRIER SYSTEMS DEFLECTION AREA.
5) ALL SIGNS ARE TO BE LEVEL, REGARDLESS OF CAMBER IN SUPPORT.

FOR MAXIMUM EFFECTIVENESS, POSITION SIDE MOUNTED SIGNS ON STRUCTURAL STEEL BREAKAWAY SIGN SUPPORTS AS FOLLOWS:

ON A TANGENT SECTION, POSITION THE SIGN SO THE VERTICAL AXIS IS PLUMB AND THE HORIZONTAL AXIS IS AT AN ANGLE OF 90° WITH THE TRAFFIC LANE WHICH THE SIGN SERVES. SIGNS LOCATED 30 FT OR MORE FROM THE EDGE OF THE ROAD SHALL BE TURNED APPROXIMATELY 3° TOWARD THE ROAD.

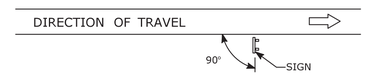

DIAGRAM "A"

ON A HORIZONTAL CURVE SECTION, POSITION THE SIGN SO THE VERTICAL AXIS IS PLUMB AND THE HORIZONTAL AXIS IS AT AN ANGLE OF 90° WITH A STRAIGHT LINE BETWEEN THE SIGN AND THE POINT AT WHICH THE SIGN SHALL BE READ.

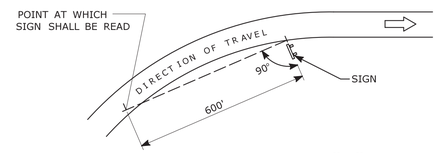

DIAGRAM "B"

SIGN ORIENTATION DETAILS FOR SIDE MOUNTED SIGNS ON STRUCTURAL STEEL BREAKAWAY SIGN SUPPORTS

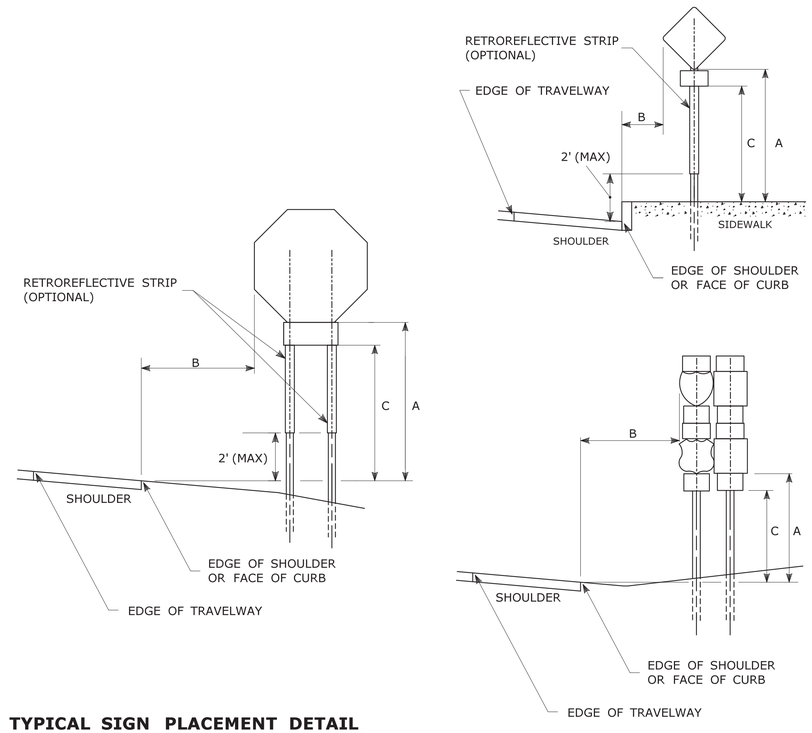

TYPICAL SIGN PLACEMENT DETAIL

NOTES:

ALL SIGNS AND SHIELDS ON DIRECTIONAL ASSEMBLIES SHALL ABUT VERTICALLY.

REFER TO STANDARD SHEET No. TR-1208_02 "METAL SIGN POSTS AND SIGN MOUNTING DETAILS" FOR SIGN POSTS AND SIGN MOUNTING.

IF A RETFOREFLECTIVE STRIP IS USED ON SIGN SUPPORT, IT SHALL BE PLACED FOR THE FULL LENGTH OF THE SUPPORT FROM THE BOTTOM OF THE SIGN TO WITHIN 2 FT ABOVE THE EDGE OF THE ROADWAY.

PARKING SIGNS TYPICALLY USE 45° MOUNTING BRACKET.

DIM."A" MIN SIGN HEIGHT	DIM."B" MIN LATERAL OFFSET ①	DIM."C" MIN PLAQUE HEIGHT ①	ASSEMBLY LOCATION
7' ②	6' 12' ③	5'	SIGNS ON FREEWAYS AND EXPRESSWAYS EXCEPT CHEVRON ALIGNMENT SIGNS, ONE-DIRECTION LARGE ARROW SIGNS, DO NOT ENTER SIGNS, AND WRONG WAY SIGNS
5'	2'	4'	• SIGNS IN RURAL AREAS • DO NOT ENTER AND WRONG WAY SIGNS ALONG EXIT RAMPS • DO NOT ENTER AND WRONG WAY SIGNS ON LIMITED ACCESS HIGHWAYS
5'	2'	N/A	• CHEVRON ALIGNMENT SIGNS LOCATED ON FREEWAYS, EXPRESSWAYS, RAMPS, AND IN RURAL AREAS • ONE-DIRECTION LARGE ARROW SIGNS LOCATED ON FREEWAYS, EXPRESSWAYS, RAMPS, AND IN RURAL AREAS
4'	6' 12' ③	N/A	INCIDENT MANAGEMENT SIGNS AND MILE POST MARKER ASSEMBLIES LOCATED ON FREEWAYS AND EXPRESSWAYS
4'	2'	4'	CENTRAL ISLANDS OF ROUNDABOUTS
7'	2' ④	6'	BUSINESS & RESIDENTIAL AREAS WHERE PARKING OR OTHER OBSTRUCTIONS LIMIT VISIBILITY
7'	2' ④	7'	SIDEWALKS ⑤

① OR AS DIRECTED BY THE ENGINEER

② 8 FT MINIMUM HEIGHT REQUIRED IF A SUPPLEMENTAL PLAQUE IS SUBMOUNTED BELOW THE MAJOR SIGN.

③ 6 FT FROM EDGE OF SHOULDER, WHEN SHOULDER IS OVER 6 FT WIDE
12 FT FROM EDGE OF TRAVELWAY, WHEN SHOULDER IS LESS THAN 6 FT WIDE.

④ A LATERAL OFFSET OF AT LEAST 1 FT FROM THE FACE OF THE CURB MAY BE USED WHERE SIDEWALK WIDTH IS LIMITED OR WHERE EXISTING UTILITY POLES ARE CLOSE TO THE CURB.

⑤ A CLEAR PATH OF NOT LESS THAN 4 FT SHALL BE PROVIDED IN SIDEWALK AREAS.

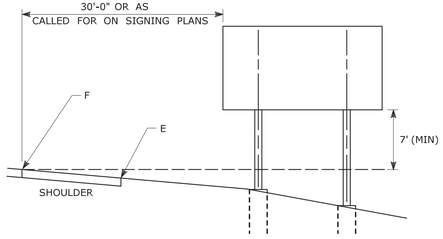

TYPICAL PLACEMENT OF SIDE MOUNTED SIGNS ON STRUCTURAL STEEL BREAKAWAY SIGN SUPPORTS

NOTES:

1) MIN. VERTICAL CLEARANCE ABOVE SIDEWALKS SHALL BE 7'.
2) WHERE GUIDE RAIL IS USED, THE OFFSET TO THE NEAR EDGE OF SIGN FACE SHALL BE AS SHOWN ELSEWHERE IN THE CONTRACT PLANS.
3) ON INTERSECTING ROADS AT RAMP TERMINI, THE OFFSET TO THE NEAR EDGE OF OF SIGN FACE SHALL BE 6' MIN. FROM POINT "E".
4) IF 30'-0" MIN. CANNOT BE MET, PLEASE CONTACT THE ENGINEER.

RETROREFLECTIVE STRIPS 48" LONG OR LESS:

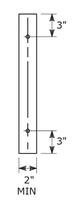

RETROREFLECTIVE STRIPS OVER 48" LONG:

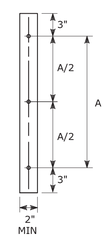

RETROREFLECTIVE STRIP DETAIL

NOTES:

RETROREFLECTIVE STRIPS WHICH ARE 48 IN LONG OR LESS SHALL BE ATTACHED USING 2 BOLTS AND RETROREFLECTIVE STRIPS OVER 48 IN LONG SHALL BE ATTACHED USING 3 BOLTS AS SHOWN ON THE DETAILS ABOVE.
REFER TO STANDARD SHEET No. TR-1208_02 "METAL SIGN POSTS AND SIGN MOUNTING DETAILS" FOR MOUNTING DETAILS.

RETROREFLECTIVE STRIP COLOR SHALL MATCH THE BACKGROUND COLOR OF THE SIGN, EXCEPT THAT THE COLOR OF THE STRIP FOR "YIELD" AND "DO NOT ENTER" SIGNS SHALL BE RED.

REV.	DATE	REVISION DESCRIPTION
3	8-2018	INCLUDED INCIDENT MANAGEMENT AND MILE MARKER SIGNS.
2	4-2017	MINOR REVISIONS.
1	2-2011	MINOR REVISIONS.

THE INFORMATION, INCLUDING ESTIMATED QUANTITIES OF WORK, SHOWN ON THESE SHEETS IS BASED ON LIMITED INVESTIGATIONS BY THE STATE AND IS IN NO WAY WARRANTED TO INDICATE THE CONDITIONS OF ACTUAL QUANTITIES OF WORK WHICH WILL BE REQUIRED.

Plotted Date: 8/10/2018

NOT TO SCALE

STATE OF CONNECTICUT
DEPARTMENT OF TRANSPORTATION

Filename: TR_1208_01_1_2018.dgn Model: TR-1208_01

SUBMITTED BY: NAME/DATE/TIME: Mark F. Makuch, P.E. 2018.08.17 09:06:06-04'00'

APPROVED BY: NAME/DATE/TIME: Mark F. Carlino, P.E. 2018.08.21 07:48:06-04'00'

CTDOT STANDARD SHEET

OFFICE OF ENGINEERING

STANDARD SHEET TITLE:

SIGN PLACEMENT AND RETROREFLECTIVE STRIP DETAILS

STANDARD SHEET NO.: TR-1208_01

TYPICAL METAL SIGN POSTS

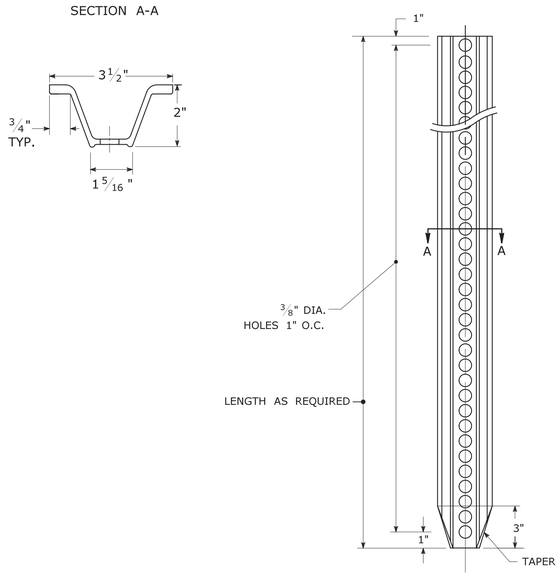

TYPICAL SIGN PANEL ATTACHMENT

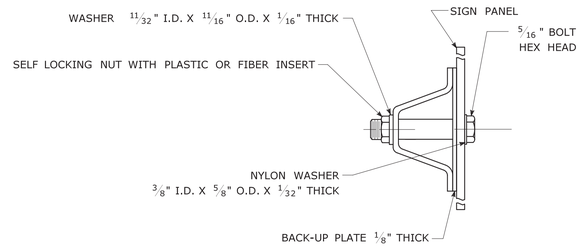

TYPICAL BACK TO BACK SIGN PANEL ATTACHMENT

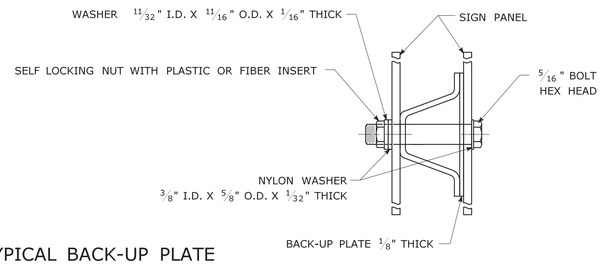

TYPICAL BACK-UP PLATE

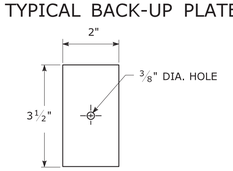

BOLTS - STAINLESS STEEL CONFORMING TO ASTM F593, ALLOY GROUP 1 OR 2 (ALLOY TYPES 304 OR 316).
SELF LOCKING NUTS - STAINLESS STEEL CONFORMING TO ASTM F594, ALLOY GROUP 1 OR 2 (ALLOY TYPES 304 OR 316).
WASHERS - STAINLESS STEEL CONFORMING TO ASTM A240, (ALLOY TYPES 304 OR 316).

METAL DELINEATOR POST

WT./FT. = 1.12 LBS./FT. MIN.

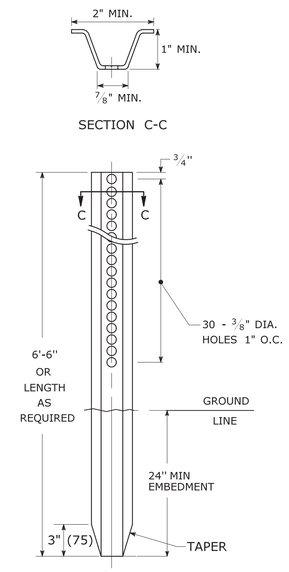

GENERAL NOTES:

1. STEEL FOR DELINEATOR POSTS SHALL BE ASTM A36 STEEL. STEEL FOR ALL OTHER POSTS SHALL CONFORM TO THE MECHANICAL REQUIREMENTS OF ASTM A 499 GRADE 80 AND TO THE CHEMICAL REQUIREMENTS OF ASTM A1 CARBON STEEL TEE RAIL HAVING NOMINAL WEIGHT (MASS) OF 91 LBS. OR GREATER PER LINEAR YARD.
2. AFTER FABRICATION, ALL STEEL POSTS, STRAPS AND PLATES SHALL BE GALVANIZED TO MEET THE REQUIREMENTS OF ASTM A123.
3. WASHERS FOR BREAKAWAY INSTALLATIONS SHALL MEET ASTM F436, TYPE 1.
4. SPACER BAR FOR BREAKAWAY INSTALLATION SHALL CONFORM TO THE MECHANICAL REQUIREMENTS OF ASTM A36.
5. ALL BOLTS, NUTS, AND WASHERS FOR BREAKAWAY INSTALLATIONS SHALL BE GALVANIZED TO MEET THE REQUIREMENTS OF ASTM A153.
6. ALL SIGN POSTS SHALL HAVE BREAKAWAY FEATURES THAT MEET AASHTO REQUIREMENTS CONTAINED IN THE CURRENT "STANDARD SPECIFICATIONS FOR STRUCTURAL SUPPORTS FOR HIGHWAY SIGNS, LUMINAIRES AND TRAFFIC SIGNALS." THE BREAKAWAY FEATURES SHALL BE STRUCTURALLY ADEQUATE TO CARRY THE SIGNS SHOWN IN THE PLANS AT 60 mph WIND LOADINGS. INSTALLATIONS SHALL BE IN ACCORDANCE WITH MANUFACTURERS RECOMMENDATIONS.
7. SIGN POSTS SHALL BE 4 LBS./FT.

BREAKAWAY INSTALLATION

FOR 4 LBS./FT. POSTS

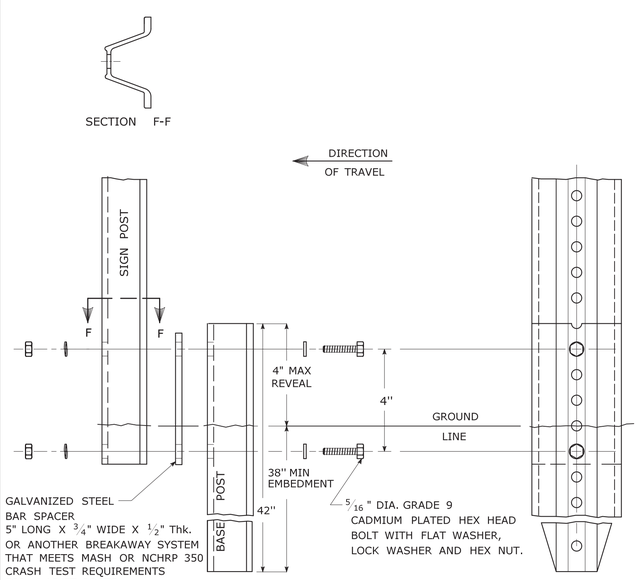

TYPICAL SIGN POST INSTALLATION IN LEDGE

LEDGE SHALL BE REMOVED TO DRIVE THE BASE POST TO A DEPTH OF 38".

HOLE SHALL BE FILLED WITH SUB-BASE MATERIAL AND COMPACTED WITH A TAMPING BAR, OR TECHNIQUE APPROVED BY THE ENGINEER, PRIOR TO BASE POST INSTALLATION.

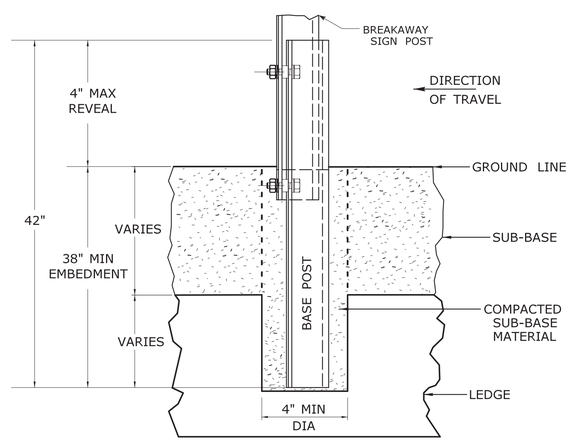

TYPICAL SLEEVE FOR PAVED AREAS

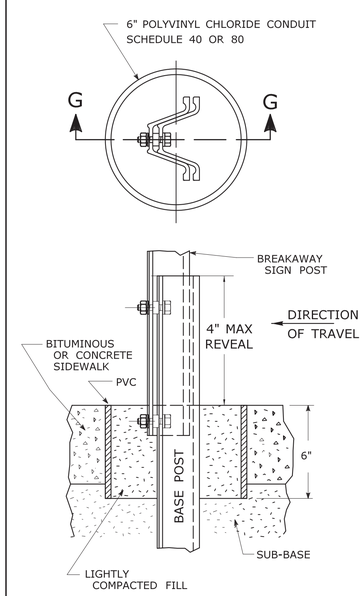

45° MOUNTING BRACKET FOR INSTALLATION OF PARKING SIGNS

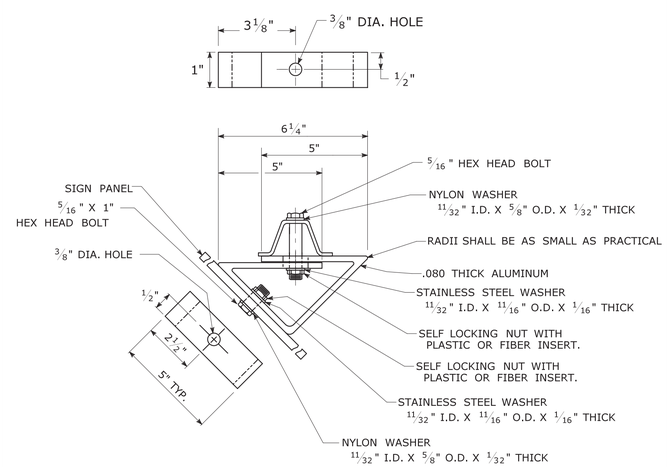

REV.	DATE	REVISION DESCRIPTION
2	6-2017	SIGN POST REVISIONS.
1	2-2011	MINOR REVISIONS.

THE INFORMATION, INCLUDING ESTIMATED QUANTITIES OF WORK, SHOWN ON THESE SHEETS IS BASED ON LIMITED INVESTIGATIONS BY THE STATE AND IS IN NO WAY WARRANTED TO INDICATE THE CONDITIONS OF ACTUAL QUANTITIES OF WORK WHICH WILL BE REQUIRED.

Plotted Date: 6/6/2017

NOT TO SCALE

STATE OF CONNECTICUT
DEPARTMENT OF TRANSPORTATION

Filename: TR-1208_02_May_2017_Revision.dgn Model: TR-1208_02

SUBMITTED BY: NAME/DATE/TIME:
Mark F. Makuch, P.E. 2017.06.07 07:30:30-04'00'
Mary E. Baker, P.E. 2017.06.13 15:28:14-04'00'
APPROVED BY: NAME/DATE/TIME:
Gregory M. Dorosh, P.E. 2017.06.15 09:27:29-04'00'

CTDOT STANDARD SHEET

OFFICE OF ENGINEERING

STANDARD SHEET TITLE:

METAL SIGN POSTS AND SIGN MOUNTING DETAILS

GUIDE SHEET NO.: TR-1208_02

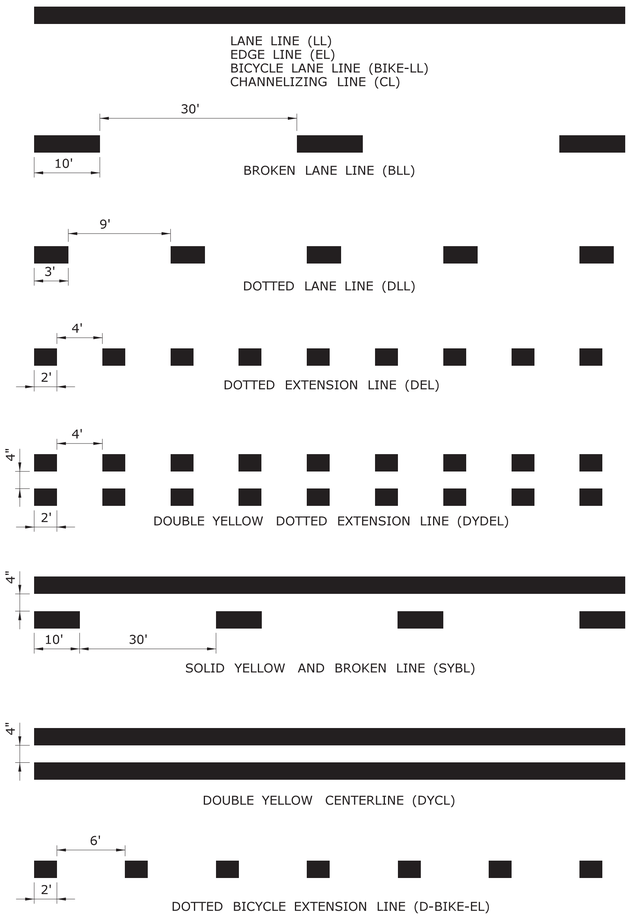

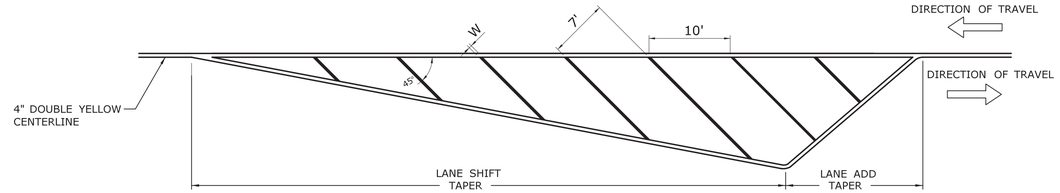

CROSS HATCHED ISLAND DETAIL
(YELLOW)

W IS TO BE 6" WHEN POSTED SPEED ≤ 45 MPH
W IS TO BE 12" WHEN POSTED SPEED > 45 MPH
CROSS HATCHED ISLANDS ARE TO BE INSTALLED WHERE CALLED FOR ON THE PLANS

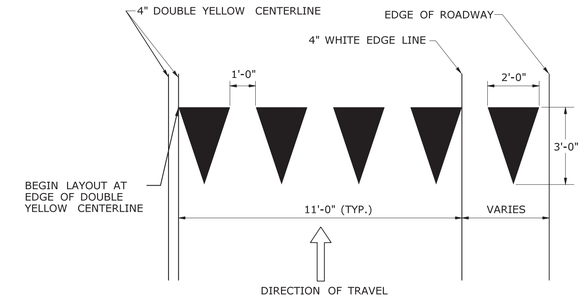

YIELD LINE DETAIL
(WHITE)

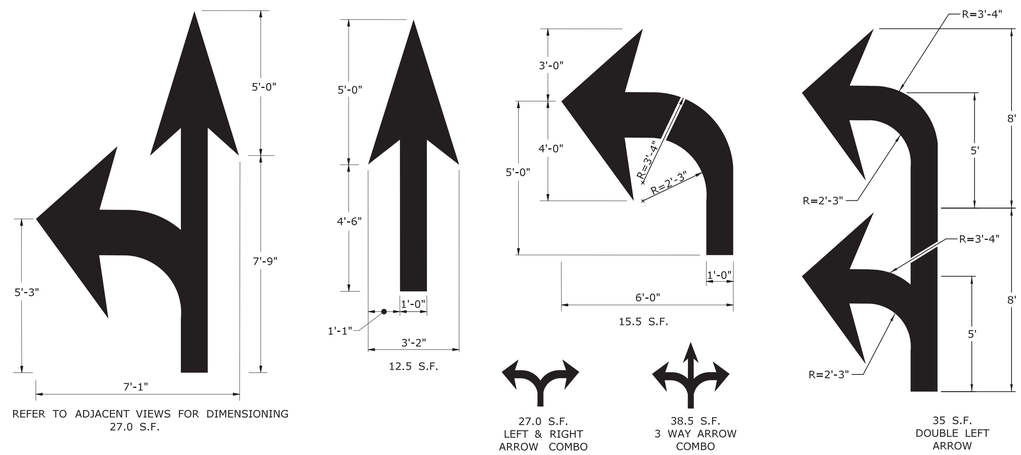

PAVEMENT ARROW DETAILS
(WHITE)
ARROWS SHALL BE CENTERED IN TRAVEL LANE

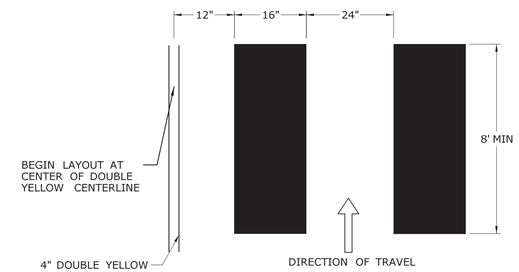

CROSSWALK DETAIL
(WHITE)

NOTES :

1. AREA OF PAVEMENT MARKINGS AS INDICATED IS APPROXIMATE.
2. RIGHT TURN PAVEMENT MARKING ARROWS ARE MIRROR IMAGE OF LEFT TURN PAVEMENT MARKING ARROWS.

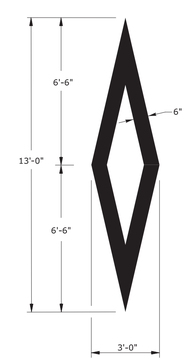

WHITE PREFERENTIAL LANE SYMBOL
13.0 S.F.

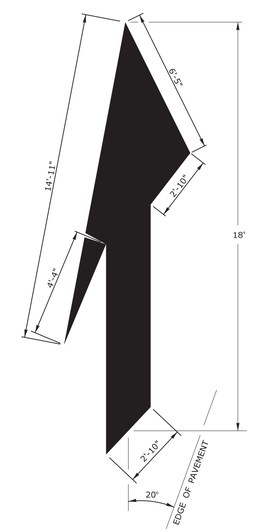

WHITE LANE REDUCTION ARROW
41.8 S.F.

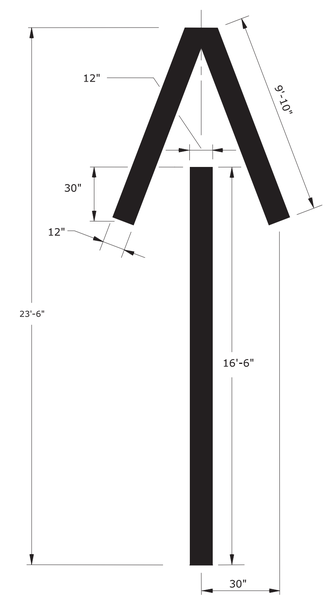

WHITE WRONG WAY PAVEMENT ARROW
36.2 S.F.

REV.	DATE	REVISION DESCRIPTION
1	8-2018	REMOVED ROUNDABOUT MARKINGS.

THE INFORMATION, INCLUDING ESTIMATED QUANTITIES OF WORK, SHOWN ON THESE SHEETS IS BASED ON LIMITED INVESTIGATIONS BY THE STATE AND IS IN NO WAY WARRANTED TO INDICATE THE CONDITIONS OF ACTUAL QUANTITIES OF WORK WHICH WILL BE REQUIRED.

Plotted Date: 8/10/2018

NOT TO SCALE

STATE OF CONNECTICUT
DEPARTMENT OF TRANSPORTATION

Filename: TR-1210_04.dgn Model: CT_Civil_2D_Sheet

SUBMITTED BY: NAME/DATE/TIME: Mark F. Makuch, P.E. 2018.08.17 09:07:44-04'00'

APPROVED BY: NAME/DATE/TIME: Mark F. Carlino, P.E. 2018.08.21 07:48:45-04'00'

CTDOT
STANDARD SHEET

OFFICE OF ENGINEERING

STANDARD SHEET TITLE:

PAVEMENT MARKING LINES AND SYMBOLS

STANDARD SHEET NO.:

TR-1210_04

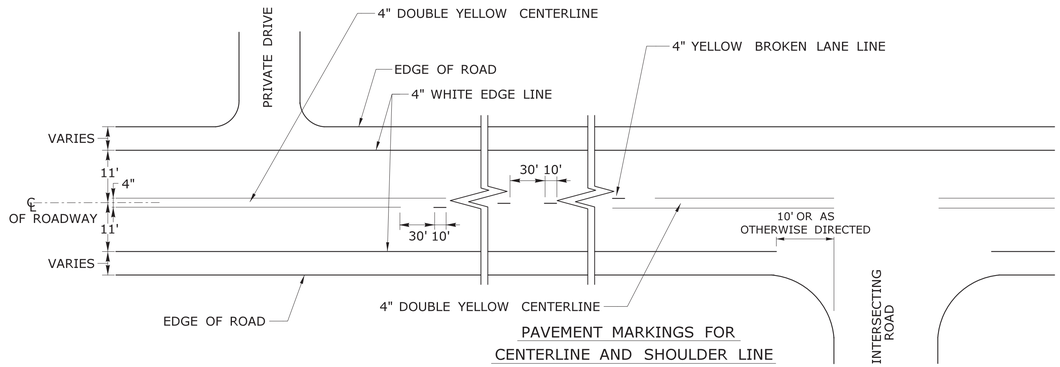

PAVEMENT MARKINGS FOR CENTERLINE AND SHOULDER LINE

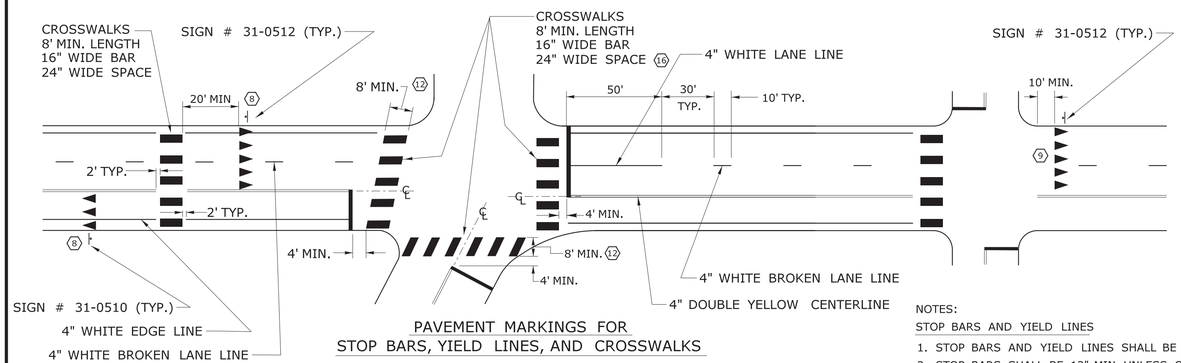

PAVEMENT MARKINGS FOR STOP BARS, YIELD LINES, AND CROSSWALKS

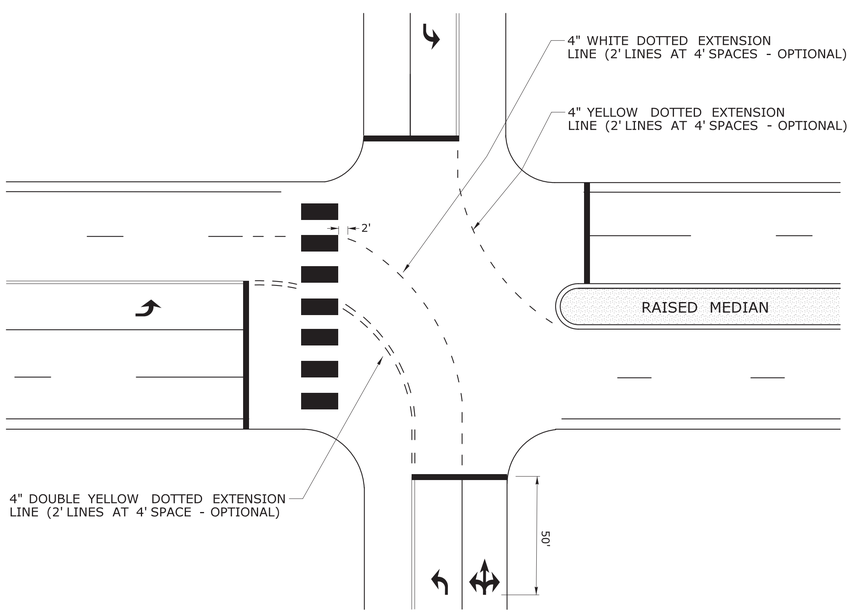

TURNING EXTENSIONS

NOTES:

STOP BARS AND YIELD LINES

1. STOP BARS AND YIELD LINES SHALL BE WHITE.
2. STOP BARS SHALL BE 12" MIN. UNLESS OTHERWISE NOTED ON PLANS.
3. STOP BARS TO BE PLACED A MINIMUM OF 4' IN ADVANCE OF THE NEAREST EDGE OF CROSSWALK AND SHOULD BE PLACED 90° TO THE CENTERLINE OF THE ROADWAY.
4. IN THE ABSENCE OF A MARKED CROSSWALK THE STOP BAR SHOULD BE PLACED 90° TO THE CENTERLINE OF THE ROADWAY, AT THE DESIRED STOPPING POINT AT LEAST 5' AND NO MORE THAN 30' FROM THE NEAREST EDGE OF THE INTERSECTING ROADWAY.
5. THE STOP SIGN SHOULD BE PLACED IN LINE WITH THE STOP BAR. HOWEVER, IF THE STOP SIGN CANNOT BE LOCATED EXACTLY WHERE VEHICLES ARE EXPECTED TO STOP, THE STOP BAR SHOULD BE PLACED AT THE STOPPING POINT.
6. FOR STOP BARS AT RAMPS SEE DETAILS "R", "S", "T", & "U" AND NOTES ON TRAFFIC STANDARD SHEET TR-1210 07 "PAVEMENT MARKINGS FOR DIVIDED HIGHWAYS EXIT RAMPS".
7. FOR YIELD LINE INSTALLATIONS, ONLY FULL TRIANGLES ARE TO BE INSTALLED.

(8) MID-BLOCK CROSSWALKS ARE CROSSWALKS LOCATED MORE THAN 50 FEET FROM A SIGNALIZED OR UNSIGNALIZED INTERSECTION. YIELD LINES ASSOCIATED WITH MIDBLOCK CROSSWALKS SHALL BE INSTALLED AND SHOULD BE LOCATED 20 TO 50 FEET IN ADVANCE OF THE NEAREST CROSSWALK LINE OR AS DIRECTED BY THE ENGINEER.
WHERE A YIELD LINE EXISTS ON AN APPROACH TO A CROSSWALK, THE APPROAPRIATE "YIELD TO PEDESTRIANS" SIGN IS REQUIRED.

(9) FOR CROSSWALKS AT UNSIGNALIZED INTERSECTIONS WITH MINOR STREET STOP CONTROL, YIELD LINES SHALL BE INSTALLED ON MULTI-LANE APPROACHES, BUT NOT SINGLE LANE APPROACHES.

10. THE YIELD SIGN SHOULD BE PLACED IN LINE WITH A YIELD LINE. HOWEVER, IF THE YIELD SIGN CANNOT BE LOCATED EXACTLY WHERE VEHICLES ARE EXPECTED TO YIELD, THE YIELD LINE SHOULD BE PLACED AT THE YIELDING POINT.

CROSSWALKS

11. CROSSWALK MARKINGS SHALL BE WHITE.

(12) AT LOCATIONS WHERE THE CROSSWALK IS SKEWED, BARS TO BE PARALLEL TO ℄ AND ENDS OF BARS TO BE PARALLEL. THE LENGTH OF THE BARS WILL VARY DEPENDING ON THE ANGLE OF SKEW.

13. BARS SHOULD BE NO CLOSER THAN 1' FROM EDGE OF ROAD.
14. ONLY FULL LENGTH BARS ARE TO BE INSTALLED.
15. DECORATIVE CROSSWALKS SHALL BE BANDED FROM CURB TO CURB WITH A MINIMUM 12" WIDE WHITE TRANSVERSE LINE ALONG EACH EDGE.

(16) 24" WIDE SPACE TO BE CENTERED ON YELLOW CENTERLINE.

PAVEMENT MARKINGS FOR TURNING LANES

(17) INSTALL AT LEAST TWO ARROWS PER LANE WHERE STORAGE LENGTH IS GREATER THAN 150 FEET.

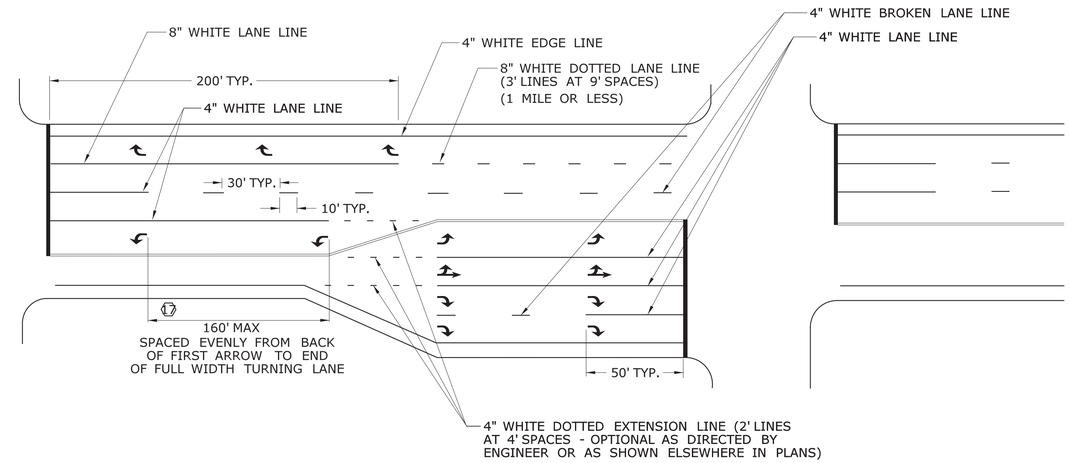

PAVEMENT MARKINGS FOR TURNING LANES AND ROAD LANE-DROP

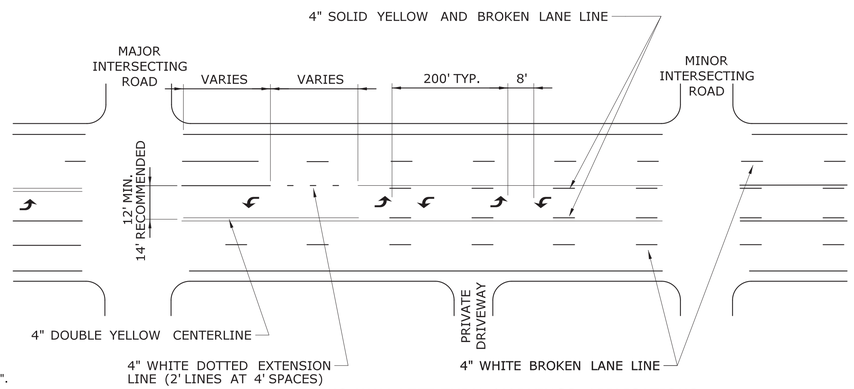

TWO-WAY LEFT-TURN MARKINGS APPLICATIONS

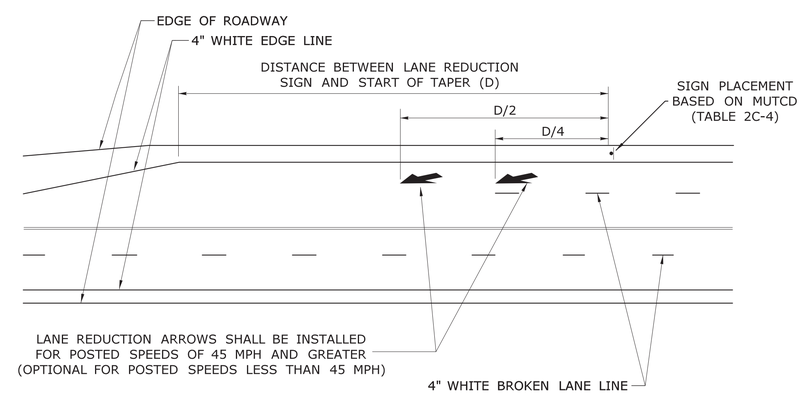

LANE REDUCTION TRANSITIONS

REV.	DATE	REVISION DESCRIPTION
1	8-2018	REVISED YIELD LINE SIGNAGE AND NOTES.

THE INFORMATION, INCLUDING ESTIMATED QUANTITIES OF WORK, SHOWN ON THESE SHEETS IS BASED ON LIMITED INVESTIGATIONS BY THE STATE AND IS IN NO WAY WARRANTED TO INDICATE THE CONDITIONS OF ACTUAL QUANTITIES OF WORK WHICH WILL BE REQUIRED.

Plotted Date: 8/10/2018

NOT TO SCALE

STATE OF CONNECTICUT
DEPARTMENT OF TRANSPORTATION

Filename: TR-1210_08.DGN Model: TR-1210_05

SUBMITTED BY: NAME/DATE/TIME: Mark F. Makuch, P.E. 2018.08.17 09:10:18-04'00'

APPROVED BY: NAME/DATE/TIME: Mark F. Carlino, P.E. 2018.08.21 07:49:18-04'00'

CTDOT STANDARD SHEET

OFFICE OF ENGINEERING

STANDARD SHEET TITLE:

PAVEMENT MARKINGS FOR NON FREEWAYS

STANDARD SHEET NO.: **TR-1210_08**

E5 - SERIES

E5-1

EXIT

COPY & BORDER - WHITE
BACKGROUND - GREEN

AREA (SQ. FT)	SIZE (INCHES)	CONN. D.O.T. #	POSTS
16.0	48	51-6147	2

16 - SERIES

CONSTRUCTION AHEAD
ROAD USE RESTRICTED
STATE LIABILITY LIMITED
GENERAL STATUTES SEC 13a-115, 13a-145
COMMISSIONER OF TRANSPORTATION

	AREA (SQ. FT)	SIZE (INCHES)	CONN. D.O.T. #	POSTS
16-M	5.0	30X24	80-1613	1
16-H	17.5	60X42	80-1608	2
16-E	35.0	84X60	80-1605	2

CONSTRUCTION AHEAD
SIDEWALK USE RESTRICTED
STATE LIABILITY LIMITED
GENERAL STATUTES SEC 13a-115, 13a-145
COMMISSIONER OF TRANSPORTATION

AREA (SQ. FT)	SIZE (INCHES)	CONN. D.O.T. #	POSTS
10.0	48X30	80-1619	2

G20 - SERIES

G20-2a

END ROAD WORK

AREA (SQ. FT)	SIZE (INCHES)	CONN. D.O.T. #	POSTS
8.0	48X24	80-9612	2

ROAD WORK NEXT 0 MILE(S) BE PREPARED TO STOP

VARIABLE MILEAGE

AREA (SQ. FT)	SIZE (INCHES)	CONN. D.O.T. #	POSTS
90.0	120X108	80-9728	

WORK AREA BE PREPARED TO STOP

AREA (SQ. FT)	SIZE (INCHES)	CONN. D.O.T. #	POSTS
9.0	36	80-9711	1
16.0	48	80-9712	2

NEXT 0 MILES

VARIABLE MILEAGE

AREA (SQ. FT)	SIZE (INCHES)	CONN. D.O.T. #	POSTS
7.0	72X14	80-9720	

BUSINESS ACCESS

VARIABLE ARROW
COPY & BORDER - WHITE
BACKGROUND - BLUE

AREA (SQ. FT)	SIZE (INCHES)	CONN. D.O.T. #	POSTS
9.0	36	50-5934	2

M4 - SERIES

M4-8

DETOUR

AREA (SQ. FT)	SIZE (INCHES)	CONN. D.O.T. #	POSTS
2.0	24X12	80-9707	1

M4-9b

DETOUR

VARIABLE ARROW

AREA (SQ. FT)	SIZE (INCHES)	CONN. D.O.T. #	POSTS
5.0	30X24	80-9703	1

M4-8a

END DETOUR

AREA (SQ. FT)	SIZE (INCHES)	CONN. D.O.T. #	POSTS
3.0	24X18	80-9708	1

M4-9b

DETOUR

VARIABLE ARROW

AREA (SQ. FT)	SIZE (INCHES)	CONN. D.O.T. #	POSTS
6.25	30X30	80-9706	1

M4-10

(R) DETOUR
(L) DETOUR

AREA (SQ. FT)	SIZE (INCHES)	CONN. D.O.T. #	POSTS
6.0	48X18	80-9701R	2
6.0	48X18	80-9702L	2

DETOUR

VARIABLE ARROW

AREA (SQ. FT)	SIZE (INCHES)	CONN. D.O.T. #	POSTS
5.0	30X24	80-9710	1

R1 - SERIES

R1-1

STOP

COPY & BORDER - WHITE
BACKGROUND - RED

AREA (SQ. FT)	SIZE (INCHES)	CONN. D.O.T. #	POSTS
5.19	30	31-0552	1
13.30	48	31-0557	2

R1-2

YIELD

COPY & BORDER - RED
BACKGROUND - WHITE

AREA (SQ. FT)	SIZE (INCHES)	CONN. D.O.T. #	POSTS
3.90	36	31-0523	1
10.83	60	31-0528	2

R4 - SERIES

R4-7

COPY & BORDER - BLACK
BACKGROUND - WHITE

AREA (SQ. FT)	SIZE (INCHES)	CONN. D.O.T. #	POSTS
5.0	24X30	31-1526	1

R4-9

STAY IN LANE

COPY & BORDER - BLACK
BACKGROUND - WHITE

AREA (SQ. FT)	SIZE (INCHES)	CONN. D.O.T. #	POSTS
5.0	24X30	31-1517	1
12.0	36X48	31-1518	1
20.0	48X60	31-1519	2

R9 & R11 - SERIES

R9-9

SIDEWALK CLOSED

COPY & BORDER - BLACK
BACKGROUND - WHITE

AREA (SQ. FT)	SIZE (INCHES)	CONN. D.O.T. #	POSTS
3.75	30X18	80-9076	1

R11-3a

ROAD CLOSED
00 MILES AHEAD
LOCAL TRAFFIC ONLY

VARIABLE MILEAGE
COPY & BORDER - BLACK
BACKGROUND - WHITE

AREA (SQ. FT)	SIZE (INCHES)	CONN. D.O.T. #	POSTS
12.5	60X30	80-9077	2

R9-11

SIDEWALK CLOSED AHEAD
CROSS HERE

VARIABLE ARROW
COPY & BORDER - BLACK
BACKGROUND - WHITE

AREA (SQ. FT)	SIZE (INCHES)	CONN. D.O.T. #	POSTS
3.0	24X18	80-9074	1

R11-3b

BRIDGE CLOSED
00 MILES AHEAD
LOCAL TRAFFIC ONLY

VARIABLE MILEAGE
COPY & BORDER - BLACK
BACKGROUND - WHITE

AREA (SQ. FT)	SIZE (INCHES)	CONN. D.O.T. #	POSTS
12.5	60X30	80-9078	2

R9-11a

SIDEWALK CLOSED
CROSS HERE

VARIABLE ARROW
COPY & BORDER - BLACK
BACKGROUND - WHITE

AREA (SQ. FT)	SIZE (INCHES)	CONN. D.O.T. #	POSTS
2.0	24X12	80-9075	1

R11-3b

ROAD CLOSED TO THRU TRAFFIC

COPY & BORDER - BLACK
BACKGROUND - WHITE

AREA (SQ. FT)	SIZE (INCHES)	CONN. D.O.T. #	POSTS
12.5	60X30	80-9081	2

R11-2

ROAD CLOSED

COPY & BORDER - BLACK
BACKGROUND - WHITE

AREA (SQ. FT)	SIZE (INCHES)	CONN. D.O.T. #	POSTS
10.0	48X30	80-9080	2

ROAD WORK AHEAD
FINES DOUBLED

COPY & BORDER - BLACK
BACKGROUND - WHITE

AREA (SQ. FT)	SIZE (INCHES)	CONN. D.O.T. #	POSTS
14.0	48X42	31-1906	2
22.5	60X54	31-1907	2

W1 - SERIES

W1-4

(L) (R)

AREA (SQ. FT)	SIZE (INCHES)	CONN. D.O.T. #	POSTS
9.0	36	80-9432L	1
9.0	36	80-9431R	1
16.0	48	80-9452L	2
16.0	48	80-9451R	2

W1-6

(L or R)

AREA (SQ. FT)	SIZE (INCHES)	CONN. D.O.T. #	POSTS
8.0	48X24	80-9424	2
12.5	60X30	80-9423	2

W1-8

AREA (SQ. FT)	SIZE (INCHES)	CONN. D.O.T. #	POSTS
3.0	18X24	80-9401	1
5.0	24X30	80-9403	1
7.5	30X36	80-9404	1

BOTH LANES SHIFT LEFT AHEAD (L)
BOTH LANES SHIFT RIGHT AHEAD (R)

AREA (SQ. FT)	SIZE (INCHES)	CONN. D.O.T. #	POSTS
16.0	48	80-9433L	2
16.0	48	80-9435R	2

AHEAD (L) AHEAD (R)

AREA (SQ. FT)	SIZE (INCHES)	CONN. D.O.T. #	POSTS
25.0	60	80-9483L	2
25.0	60	80-9485R	2

BOTH LANES SHIFT LEFT (L)
BOTH LANES SHIFT RIGHT (R)

AREA (SQ. FT)	SIZE (INCHES)	CONN. D.O.T. #	POSTS
16.0	48	80-9434L	2
16.0	48	80-9436R	2

W1-4c

(L) (R)

AREA (SQ. FT)	SIZE (INCHES)	CONN. D.O.T. #	POSTS
25.0	60	80-9484L	2
25.0	60	80-9486R	2

AHEAD (L) AHEAD (R)

AREA (SQ. FT)	SIZE (INCHES)	CONN. D.O.T. #	POSTS
25.0	60	80-9443L	2
25.0	60	80-9445R	2

W1-4b

(L) (R)

AREA (SQ. FT)	SIZE (INCHES)	CONN. D.O.T. #	POSTS
25.0	60	80-9444L	2
25.0	60	80-9446R	2

W3 - SERIES

W3-1

OCTAGON - RED W/ WHITE BORDER
ARROW & BORDER - BLACK
BACKGROUND - FLUORESCENT ORANGE

AREA (SQ. FT)	SIZE (INCHES)	CONN. D.O.T. #	POSTS
9.0	36	80-9050	1
16.0	48	80-9051	2

W3-2

TRIANGLE - RED W/ WHITE BORDER
ARROW & BORDER - BLACK
BACKGROUND - FLUORESCENT ORANGE

AREA (SQ. FT)	SIZE (INCHES)	CONN. D.O.T. #	POSTS
9.0	36	80-9054	1
16.0	48	80-9055	2

W3-3

TOP CIRCLE - RED
MIDDLE CIRCLE - YELLOW
BOTTOM CIRCLE - GREEN
COPY & BORDER - BLACK
BACKGROUND - FLUORESCENT ORANGE

AREA (SQ. FT)	SIZE (INCHES)	CONN. D.O.T. #	POSTS
9.0	36	80-9052	1
16.0	48	80-9053	2

W4-W6 - SERIES

W4-2

(L) (R)

AREA (SQ. FT)	SIZE (INCHES)	CONN. D.O.T. #	POSTS
16.0	48	80-9918L	2
16.0	48	80-9917R	2

W6-3

AREA (SQ. FT)	SIZE (INCHES)	CONN. D.O.T. #	POSTS
16.0	48	80-9945	2

W8-W9 - SERIES

W8-1

BUMP

AREA (SQ. FT)	SIZE (INCHES)	CONN. D.O.T. #	POSTS
9.0	36	80-9901	1
16.0	48	80-9902	2

BUMP AHEAD

AREA (SQ. FT)	SIZE (INCHES)	CONN. D.O.T. #	POSTS
9.0	36	80-9801	1
16.0	48	80-9802	2

W9-2

LANE ENDS MERGE LEFT (L)
LANE ENDS MERGE RIGHT (R)

AREA (SQ. FT)	SIZE (INCHES)	CONN. D.O.T. #	POSTS
16.0	48	80-9910L	2
16.0	48	80-9911R	2

W13 - SERIES

W13-1

00 M.P.H.

SUBPLATE
VARIABLE SPEED

AREA (SQ. FT)	SIZE (INCHES)	CONN. D.O.T. #	POSTS
4.0	24	80-9569	1
6.25	30	80-9567	1

REDUCE SPEED TO 00 MPH

VARIABLE SPEED

AREA (SQ. FT)	SIZE (INCHES)	CONN. D.O.T. #	POSTS
9.0	36	80-9506	1
16.0	48	80-9508	2

W3-5

SPEED LIMIT 00

VARIABLE SPEED

AREA (SQ. FT)	SIZE (INCHES)	CONN. D.O.T. #	POSTS
9.0	36	80-9520	1
16.0	48	80-9521	2

W-16 - SERIES

W16-15P

NEW

COPY & BORDER - BLACK
BACKGROUND - ORANGE

AREA (SQ. FT)	SIZE (INCHES)	CONN. D.O.T. #	POSTS
2.0	24X12	80-9049	

W20 - SERIES

W20-1

ROAD WORK AHEAD

AREA (SQ. FT)	SIZE (INCHES)	CONN. D.O.T. #	POSTS
6.25	30	80-9602	1
9.0	36	80-9603	1
16.0	48	80-9604	2

LEFT LANES CLOSED (L)
RIGHT LANES CLOSED (R)

	AREA (SQ. FT)	SIZE (INCHES)	CONN. D.O.T. #	POSTS
(L)	16.0	48	80-9836	2
(R)	16.0	48	80-9839	2

W20-7a

AREA (SQ. FT)	SIZE (INCHES)	CONN. D.O.T. #	POSTS
9.0	36	80-9803	1
16.0	48	80-9804	2

W20-1

ROAD WORK 0000 FT

VARIABLE DISTANCE

AREA (SQ. FT)	SIZE (INCHES)	CONN. D.O.T. #	POSTS
9.0	36	80-9614	1
16.0	48	80-9615	2

LEFT TWO LANES CLOSED AHEAD (L)
RIGHT TWO LANES CLOSED AHEAD (R)

	AREA (SQ. FT)	SIZE (INCHES)	CONN. D.O.T. #	POSTS
(L)	16.0	48	80-9837	2
(R)	16.0	48	80-9838	2

SLOW MOVING TRUCKS AHEAD

AREA (SQ. FT)	SIZE (INCHES)	CONN. D.O.T. #	POSTS
32.0	96X48	80-9815	2

W20-2

DETOUR 1000 FT

AREA (SQ. FT)	SIZE (INCHES)	CONN. D.O.T. #	POSTS
9.0	36	80-9805	1
16.0	48	80-9806	2

LEFT LANE CLOSED AHEAD (L)
RIGHT LANE CLOSED AHEAD (R)

	AREA (SQ. FT)	SIZE (INCHES)	CONN. D.O.T. #	POSTS
(L)	16.0	48	80-9847	2
(R)	16.0	48	80-9848	2

W16-9P

AHEAD

AREA (SQ. FT)	SIZE (INCHES)	CONN. D.O.T. #	POSTS
2.0	24X12	80-9870	
3.75	30X18	80-9871	

ONE LANE ROAD AHEAD

AREA (SQ. FT)	SIZE (INCHES)	CONN. D.O.T. #	POSTS
9.0	36	80-9834	1
16.0	48	80-9835	2

LEFT LANE CLOSED (L)
RIGHT LANE CLOSED (R)

	AREA (SQ. FT)	SIZE (INCHES)	CONN. D.O.T. #	POSTS
(L)	16.0	48	80-9846	2
(R)	16.0	48	80-9849	2

W16-3aP

1 MILE

VARIABLE MILEAGE

AREA (SQ. FT)	SIZE (INCHES)	CONN. D.O.T. #	POSTS
2.5	30X12	80-9872	
4.5	36X18	80-9873	

W21 - SERIES

W21-6

SURVEY CREW

AREA (SQ. FT)	SIZE (INCHES)	CONN. D.O.T. #	POSTS
9.0	36	80-9607	1

W22 - SERIES

W22-1

BLASTING ZONE 1000 FT

AREA (SQ. FT)	SIZE (INCHES)	CONN. D.O.T. #	POSTS
9.0	36	80-9620	1
16.0	48	80-9625	2

W22-2

TURN OFF 2-WAY RADIO AND CELL PHONE

AREA (SQ. FT)	SIZE (INCHES)	CONN. D.O.T. #	POSTS
10.5	42X36	80-9623	2

W22-3

END BLASTING ZONE

AREA (SQ. FT)	SIZE (INCHES)	CONN. D.O.T. #	POSTS
10.5	42X36	80-9621	2

(VARIABLE LEGEND)

AREA (SQ. FT)	SIZE (INCHES)	CONN. D.O.T. #	POSTS
4.17	60X10	80-9913	2
12.0	96X18	80-9914	2
3.33	48X10	80-9916	2

BLANK OR VARIABLE LEGEND

AREA (SQ. FT)	SIZE (INCHES)	CONN. D.O.T. #	POSTS
9.0	36	80-9933	1
16.0	48	80-9934	2

USE SHOULDER

AREA (SQ. FT)	SIZE (INCHES)	CONN. D.O.T. #	POSTS
16.0	48	80-9956	2

(VARIABLE LEGEND)

AREA (SQ. FT)	SIZE (INCHES)	CONN. D.O.T. #	POSTS
12.5	60X30	80-9928	2
24.0	72X48	80-9929	2

SHOULDER CLOSED AHEAD (1)
SHOULDER CLOSED (2)

	AREA (SQ. FT)	SIZE (INCHES)	CONN. D.O.T. #	POSTS
(1)	16.0	48	80-9957	2
(2)	9.0	36	80-9958	1
(2)	16.0	48	80-9959	2

STOP-SLOW PADDLE

SIDE A STOP
SIDE B SLOW

SIDE A
BACKGROUND - RED
COPY & BORDER - WHITE
SIDE B
BACKGROUND - ORANGE
COPY & BORDER - BLACK PLAIN

AREA (SQ. FT)	SIZE (INCHES)	CONN. D.O.T. #	POSTS
2.25	18	80-9950	PADDLE

NOTES:
1. R1-SERIES SIGN THE LEGEND "O.S.T.A." SHALL APPEAR.
2. POSTS - SEE STANDARD SHEET TR-1208_02 - "METAL SIGN POSTS AND SIGN MOUNTING DETAILS".
3. POSTS SHALL BE 4 LBS./FT.
4. ALL POSTS NOTED ARE FOR LONG TERM INSTALLATION. SEE STANDARD SHEET TR-1208_02.
5. FOR TEMPORARY SUPPORTS SEE STANDARD SHEET TR-1220_02 - "CONSTRUCTION SIGN SUPPORTS AND CHANNELIZING DEVICES".
6. FOR SPECIFIC SIGN DESIGN, CONTACT CONN. D.O.T., DIVISION OF TRAFFIC ENGINEERING. FOR BOLT HOLE PATTERN REFER TO FHWA PUBLICATION "STANDARD HIGHWAY SIGNS". SIGNS OF DIFFERENT DIMENSIONS TO BE ERECTED ON THE SAME POSTS, OR SPAN/MAST ARM MOUNTED, MAY REQUIRE SPECIAL BOLT HOLE PATTERNS.
7. ALL CONSTRUCTION SIGNS TO BE PAID FOR UNDER THE CONSTRUCTION SIGNS ITEM IN THE CONTRACT.
8. MATERIALS & COLORS SHALL CONFORM TO STATE SPECIFICATIONS.

MATERIALS:
SIGNS AND THEIR PORTABLE SUPPORTS SHALL CONFORM TO THE REQUIREMENTS OF NCHRP REPORT 350 (TL-3) OR THE AASHTO MASH FOR CATEGORY 2 DEVICES. ALUMINUM THICKNESS FOR POST MOUNTED SIGNS SHALL BE .100" EXCEPT SIGN #s. 80-1605, 80-9914, 80-9815, 80-9728, 80-9519, & 51-6147 (L OR R) WHICH SHALL BE .125", PLYWOOD THICKNESS FOR POST MOUNTED SIGNS SHALL BE 1/2" EXTERIOR GRADE A-C OR BETTER. SIGN BLANKS SHALL HAVE ONE COAT OF PRIMER PAINT PRIOR TO APPLICATION OF RETROREFLECTIVE SHEETING & COPY.

COLORS:
BACKGROUND - FLUORESCENT ORANGE - EXCEPT AS NOTED.
LEGEND - BLACK - EXCEPT AS NOTED.
ALL SIGNS WITH FLUORESCENT ORANGE BACKGROUND TO USE TYPE VIII RETROREFLECTIVE SHEETING.
ALL OTHER SIGNS TO USE TYPE IX RETROREFLECTIVE SHEETING.

REV.	DATE	REVISION DESCRIPTION
6	8-2018	REVISED POST REQUIREMENTS AND SHEETING TYPE.
5	8-2015	UPDATED PER MUTCD AND FORM 816 JAN 2015 REVISION.
4	6-2012	REVISED NOTE #1 TO REFERENCE "O.S.T.A."
3	4-2012	REVISED NEW SIGNAL SIGN(S) TO CONFORM TO 2009 MUTCD.
2	2-2011	MINOR REVISIONS.
1	3-2010	REMOVED OBSOLETE SIGNS (50-5925, 50-5935).

THE INFORMATION, INCLUDING ESTIMATED QUANTITIES OF WORK, SHOWN ON THESE SHEETS IS BASED ON LIMITED INVESTIGATIONS BY THE STATE AND IS IN NO WAY WARRANTED TO INDICATE THE CONDITIONS OF ACTUAL QUANTITIES OF WORK WHICH WILL BE REQUIRED.

Plotted Date: 8/10/2018

NOT TO SCALE

STATE OF CONNECTICUT
DEPARTMENT OF TRANSPORTATION

Filename: TR-1220_01_1_2018.dgn Model: TR-1220_01

SUBMITTED BY: NAME/DATE/TIME: Mark H. Makuch, P.E. 2018.08.17 09:11:08-04'00'

APPROVED BY: NAME/DATE/TIME: Mark F. Carlino, P.E. 2018.08.21 07:49:34-04'00'

CTDOT STANDARD SHEET

OFFICE OF ENGINEERING

STANDARD SHEET TITLE:

SIGNS FOR CONSTRUCTION AND PERMIT OPERATIONS

STANDARD SHEET NO.: TR-1220_01

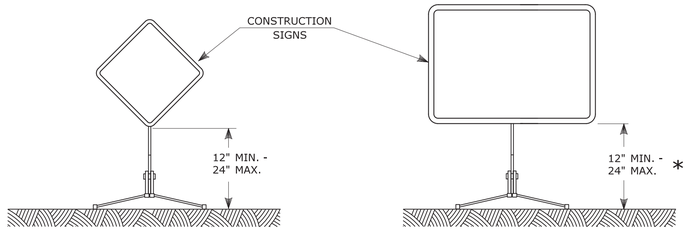

DIAMOND SHAPE **RECTANGLE SHAPE**

PORTABLE CONSTRUCTION SIGNS

NOTES FOR PORTABLE SIGN SUPPORTS:

1. SIGNS AND THEIR PORTABLE SUPPORTS SHALL CONFORM TO THE REQUIREMENTS OF NCHRP REPORT 350 (TL-3) OR THE AASHTO MASH FOR CATEGORY 2 DEVICES AND THE LATEST EDITION OF THE MUTCD.
2. MOUNTING HEIGHT OF SIGNS SHALL BE A MINIMUM OF 12" AND A MAXIMUM OF 24". SIGNS SHALL BE MOUNTED HIGHER AS NEEDED TO MEET FIELD CONDITIONS OR AS DIRECTED BY THE ENGINEER.
3. THE ENGINEER RESERVES THE RIGHT TO REJECT ANY SUPPORT DEEMED UNSUITABLE FOR THE PURPOSE INTENDED.
4. PORTABLE SIGN SUPPORTS SHALL BE STABILIZED IN A MANNER THAT WILL NOT AFFECT THEIR COMPLIANCE WITH NCHRP REPORT 350 (TL-3) OR THE AASHTO MASH FOR CATEGORY 2 DEVICES.
5. PORTABLE CONSTRUCTION SIGN SUPPORTS SHOULD NOT BE USED FOR DURATION OF MORE THAN 3 DAYS EXCEPT FOR R9-8 THROUGH R9-11a SERIES, R11 SERIES, W1-6 THROUGH W1-8 SERIES, M4-10, AND E5-1. SEE STANDARD SHEET TR-1220_01 - "SIGNS FOR CONSTRUCTION AND PERMIT OPERATIONS" FOR SIGN DETAILS.

* FOR E5-1 (EXIT SIGNS) USE MIN 48".

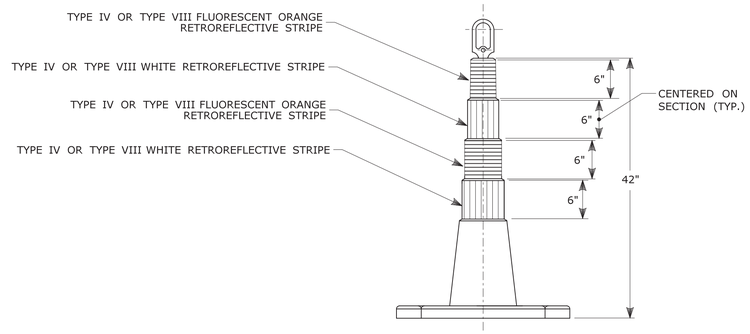

42" TRAFFIC CONE

NOTES:

1. TRAFFIC CONES SHALL CONFORM TO THE REQUIREMENTS OF NCHRP REPORT 350 (TL-3) OR THE AASHTO MASH FOR CATEGORY 1 DEVICES AND THE LATEST EDITION OF THE MUTCD.
2. IF RUBBER CONES ARE USED, THEY SHALL HAVE INTERIOR RIBS FOR RIGIDITY.
3. IF PLASTIC CONES ARE USED, THEY SHALL BE COLOR IMPREGNATED.
4. THE ENGINEER RESERVES THE RIGHT TO REJECT ANY CONE DEEMED UNSUITABLE FOR THE PURPOSE INTENDED.
5. THE ENTIRE AREA OF FLUORESCENT ORANGE AND WHITE STRIPES SHALL BE RETROREFLECTIVE SHEETING AS REQUIRED IN THE SPECIFICATIONS.
6. THE SECTIONS OF CONES NOT COVERED WITH RETROREFLECTIVE STRIPES SHALL BE ORANGE.

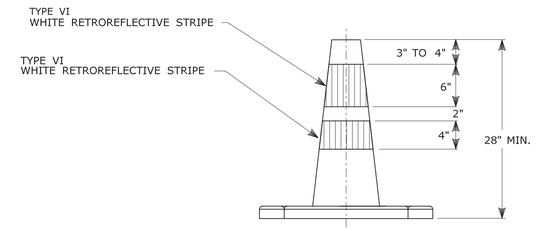

TRAFFIC CONE

NOTES:

1. TRAFFIC CONES SHALL CONFORM TO THE REQUIREMENTS OF NCHRP REPORT 350 (TL-3) OR THE AASHTO MASH FOR CATEGORY 1 DEVICES AND THE LATEST EDITION OF THE MUTCD.
2. IF RUBBER CONES ARE USED, THEY SHALL HAVE INTERIOR RIBS FOR RIGIDITY.
3. IF PLASTIC CONES ARE USED, THEY SHALL BE COLOR IMPREGNATED.
4. THE ENGINEER RESERVES THE RIGHT TO REJECT ANY CONE DEEMED UNSUITABLE FOR THE PURPOSE INTENDED.
5. THE ENTIRE AREA OF WHITE STRIPES SHALL BE RETROREFLECTIVE SHEETING AS REQUIRED IN THE SPECIFICATIONS.
6. TRAFFIC CONES NOT USED AT NIGHT MAY UTILIZE TYPE III SHEETING.
7. THE SECTIONS OF CONES NOT COVERED WITH RETROREFLECTIVE STRIPES SHALL BE ORANGE.

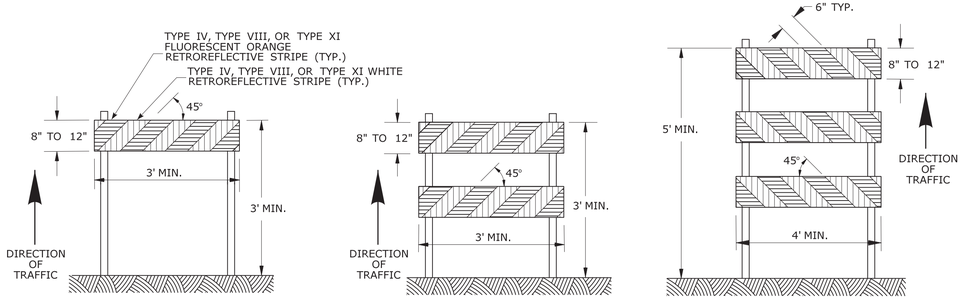

TYPE I BARRICADE **TYPE II BARRICADE** **TYPE III BARRICADE**

CONSTRUCTION BARRICADES

NOTES:

1. CONSTRUCTION BARRICADES SHALL CONFORM TO THE REQUIREMENTS OF NCHRP REPORT 350 (TL-3) OR THE AASHTO MASH AND THE LATEST EDITION OF THE MUTCD.
2. MARKINGS FOR BARRICADE RAILS SHALL BE ALTERNATE FLUORESCENT ORANGE AND WHITE STRIPES SLOPING DOWNWARD IN THE DIRECTION TRAFFIC IS TO PASS. 6" WIDE STRIPES SHALL BE USED.
3. THE ENTIRE AREA OF FLUORESCENT ORANGE AND WHITE STRIPES SHALL BE RETROREFLECTIVE SHEETING AS REQUIRED IN THE SPECIFICATIONS. THE SIDES OF BARRICADES FACING TRAFFIC SHALL HAVE RETROREFLECTIVE RAIL FACES.
4. THE ENGINEER RESERVES THE RIGHT TO REJECT ANY BARRICADE DEEMED UNSUITABLE FOR THE PURPOSE INTENDED.
5. CORNERS OF BARRICADE RAILS SHALL BE ROUNDED.
6. SIGNS MAY ONLY BE INSTALLED ON TYPE III BARRICADES AND SHALL BE PLACED SO AS TO COVER NO MORE THAN ONE BARRICADE RAIL.

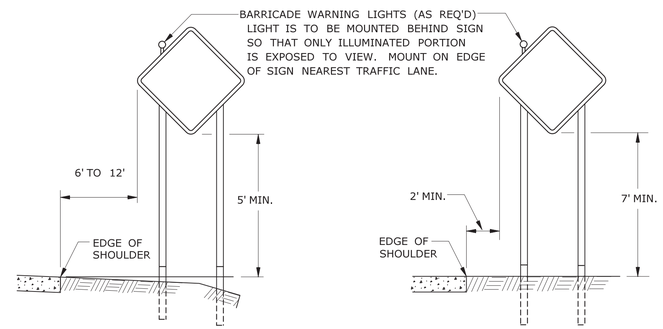

RURAL AREA **URBAN AREA**

PLACEMENT OF CONSTRUCTION SIGNS TYPICAL LONG TERM INSTALLATION

NOTES:

SUPPORTS SHALL BE METAL SIGN POSTS AND HAVE BREAK-AWAY FEATURES.

REFER TO STANDARD SHEETS:
TR-1208_01 - "SIGN PLACEMENT AND RETROREFLECTIVE STRIP DETAILS."
TR-1208_02 - "METAL SIGN POSTS AND SIGN MOUNTING DETAILS."

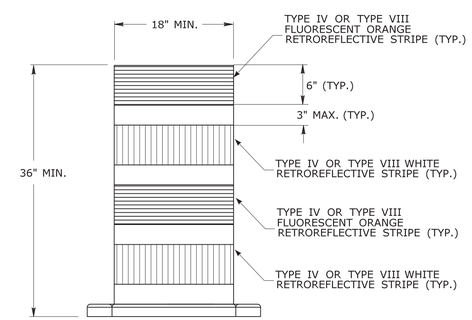

TRAFFIC DRUM FRONT VIEW

NOTES:

1. TRAFFIC DRUM SHALL CONFORM TO THE REQUIREMENTS OF NCHRP REPORT 350 (TL-3) OR THE AASHTO MASH FOR CATEGORY 1 DEVICES AND THE LATEST EDITION OF THE MUTCD.
2. THE ENGINEER RESERVES THE RIGHT TO REJECT ANY DRUM DEEMED UNSUITABLE FOR THE PURPOSE INTENDED.
3. THE ENTIRE AREA OF FLUORESCENT ORANGE AND WHITE STRIPES SHALL BE RETROREFLECTIVE SHEETING AS REQUIRED IN THE SPECIFICATIONS.
4. THE SECTIONS OF DRUMS NOT COVERED WITH RETROREFLECTIVE STRIPES SHALL BE ORANGE.

REV.	DATE	REVISION DESCRIPTION
3	8-2018	UPDATED SHEETING TYPE AND COLOR.
2	8-2015	UPDATED PER MUTCD AND FORM 816 JAN 2015 REVISION.
1	2-2011	MINOR REVISIONS.

THE INFORMATION, INCLUDING ESTIMATED QUANTITIES OF WORK, SHOWN ON THESE SHEETS IS BASED ON LIMITED INVESTIGATIONS BY THE STATE AND IS IN NO WAY WARRANTED TO INDICATE THE CONDITIONS OF ACTUAL QUANTITIES OF WORK WHICH WILL BE REQUIRED.

Plotted Date: 8/10/2018

NOT TO SCALE

STATE OF CONNECTICUT
DEPARTMENT OF TRANSPORTATION

Filename: TR-1220_02_3_2018.dgn Model: TR-1220_02

SUBMITTED BY: NAME/DATE/TIME: Mark F. Makuch, P.E. 2018.08.17 09:12:43-04'00'
APPROVED BY: NAME/DATE/TIME: Mark F. Carlino, P.E. 2018.08.21 07:49:51-04'00'

CTDOT STANDARD SHEET

OFFICE OF ENGINEERING

STANDARD SHEET TITLE:
CONSTRUCTION SIGN SUPPORTS AND CHANNELIZING DEVICES

STANDARD SHEET NO.: TR-1220_02