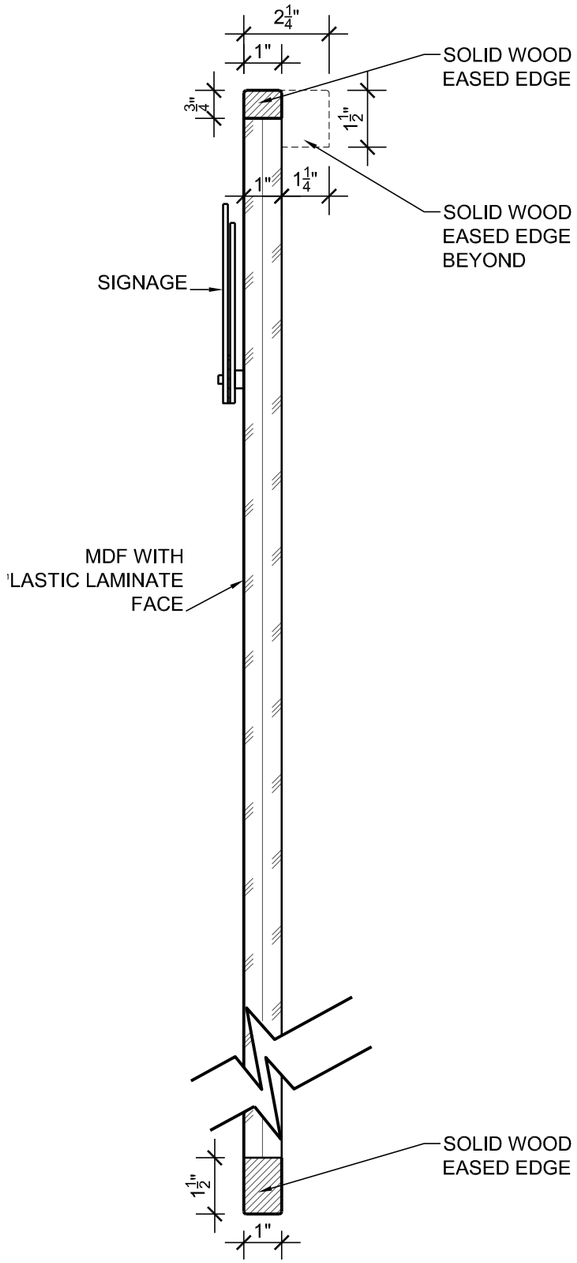

1 END PANEL VERTICAL SECTION
3"= 1' - 0"

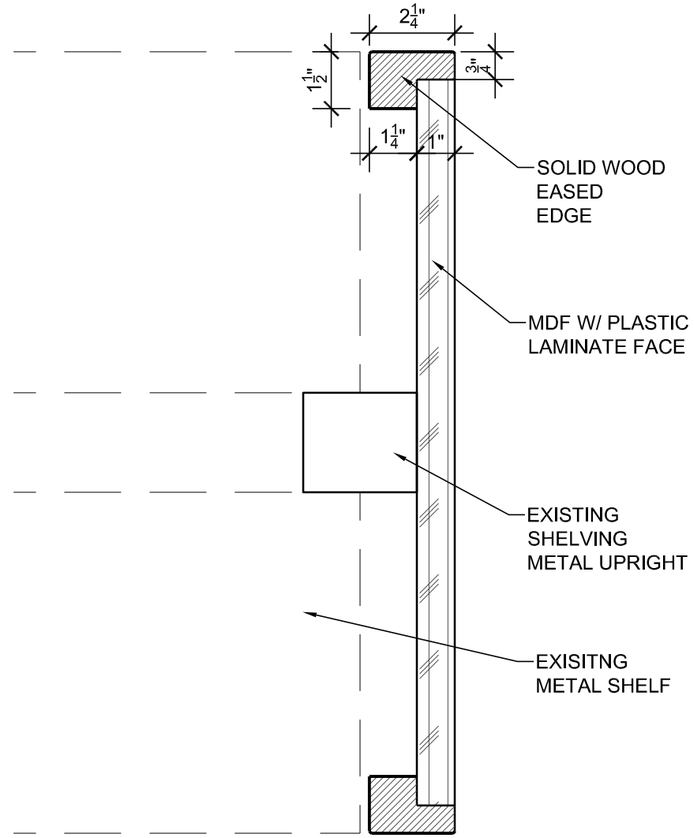

2 DOUBLE FACE
END PANEL HORIZONTAL SECTION
3" = 1' - 0"

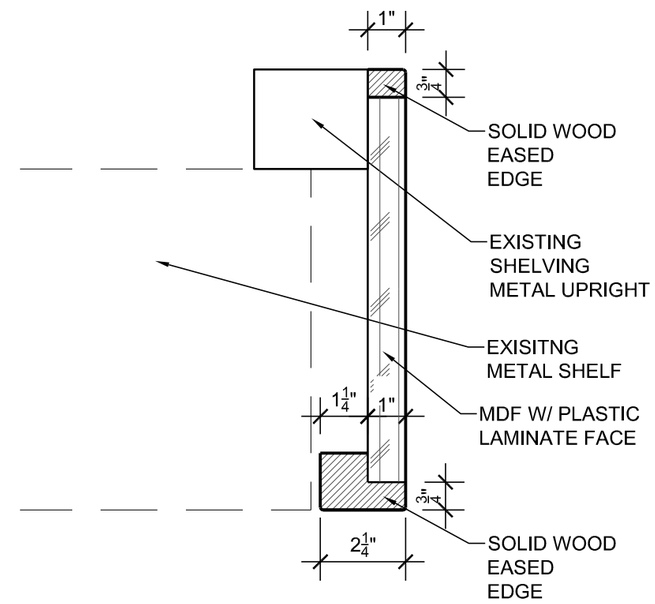

3 SINGLE FACE
END PANEL HORIZONTAL SECTION
3" = 1' - 0"

NOTES:

1" THICK END PANELS (TYP.)

SELECT MAPLE HARDWOOD EDGE.

FABRICATOR TO FOLLOW CURRENT AWI BEST PRACTICES.

CANOPY TOPS TO MATCH WIDTH OF END PANELS.

SIGNAGE SHALL BE SQUARE & LEVEL.

$\frac{1}{16}$" RADIUS EASE AT ALL EDGES.

TSKP STUDIO
One Hartford Square West
146 Wyllys Street, Bldg 1-203
Hartford, CT 06106 • 860.547.1970

JOB NAME/NUMBER MERIDEN PUBLIC LIBRARY, MERIDEN, CT		TITLE LIBRARY SHELVING END PANEL SECTIONS	DRAWING NO. SKF-02
STATE JOB NO: B023-21	SCALE: AS NOTED		
DATE: 10/21/2022	DRAWN BY: AP		