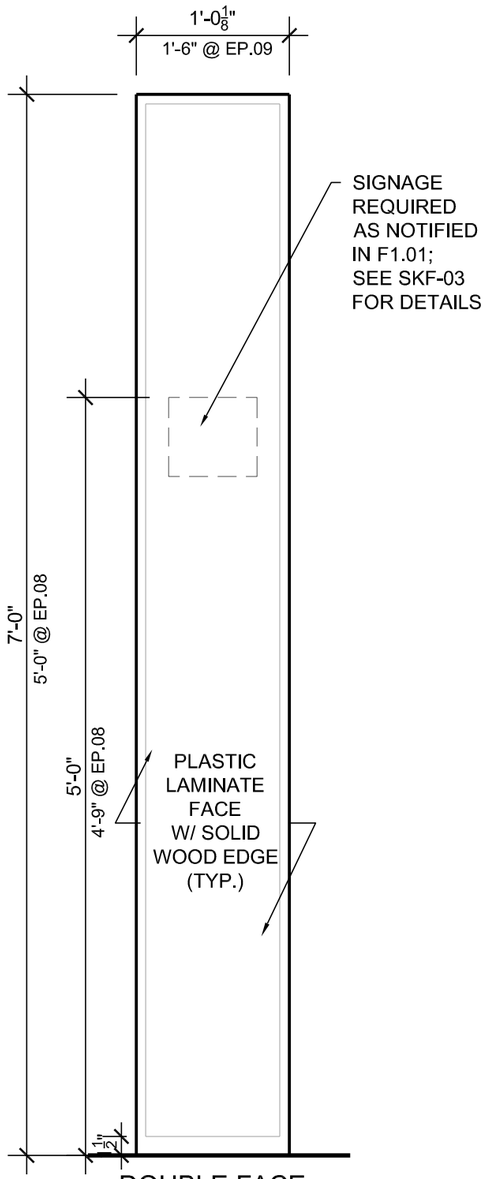

1 DOUBLE FACE
EP.02
1"= 1' - 0"

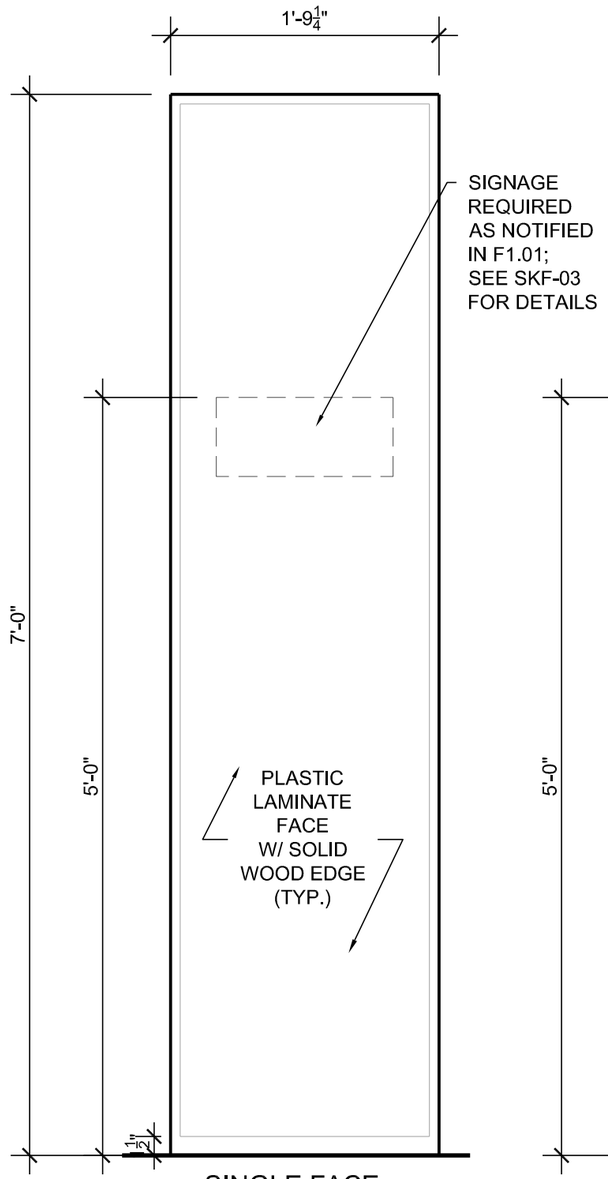

2 SINGLE FACE
EP.01, EP.08, EP.09
1"= 1' - 0"

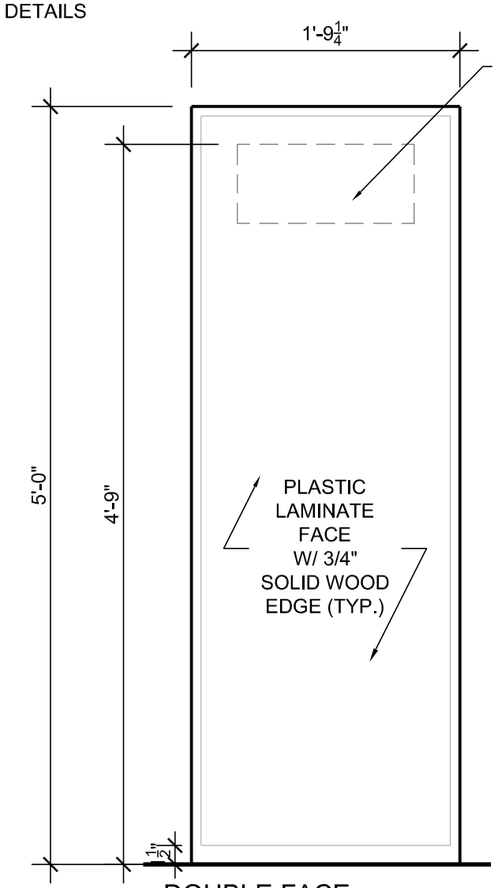

3 DOUBLE FACE
EP.03, EP.05, EP.06, EP.07
1"= 1' - 0"

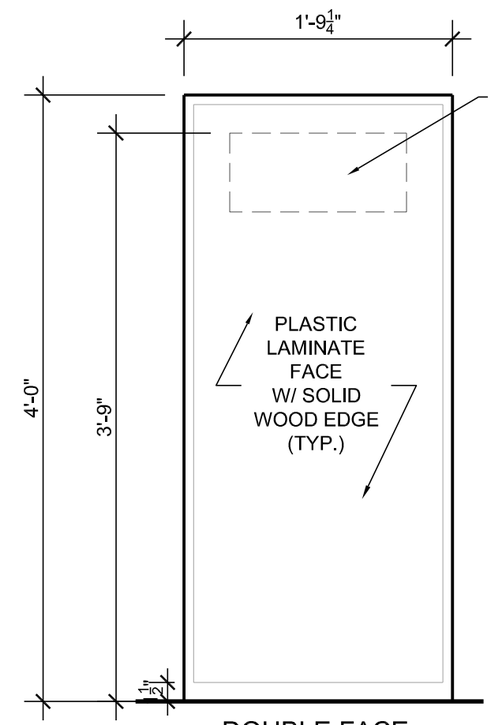

1 DOUBLE FACE
EP.04
1"= 1' - 0"

NOTES:

1" THICK END PANELS (TYP.)

SELECT MAPLE HARDWOOD EDGE.

FABRICATOR TO FOLLOW CURRENT AWI BEST PRACTICES.

CANOPY TOPS TO MATCH WIDTH OF END PANELS.

SIGNAGE SHALL BE SQUARE & LEVEL.

$\frac{1}{16}$" RADIUS EASE AT ALL EDGES.

TSKP STUDIO
One Hartford Square West
146 Wyllys Street, Bldg 1-203
Hartford, CT 06106 • 860.547.1970

JOB NAME/NUMBER		TITLE	DRAWING NO.
MERIDEN PUBLIC LIBRARY, MERIDEN, CT		LIBRARY SHELVING END PANEL DETAILS	SKF-01
STATE JOB NO: B023-21	SCALE: AS NOTED		
DATE: 10/21/2022	DRAWN BY: AP		