Meriden Public Library Renovations

Meriden, CT

FF&E Item Data Sheets

General Notes :

Reference Furniture Plans

F1.01A - First Floor Furniture Plan - Addition
F1.02 - Second Floor Furniture Plan

1) "FF&E Item Data Sheets" provide complete product information and room location. All images shown are for reference only and may not be exact representations; vendors must read complete specifications. See drawings for location and configuration.
2) Provide **(2) Master Keys** for locking files, pedestals and storage cabinets.
3) Provide and install all necessary hardware and fasteners for all storage units, library stacks, office desking and other equipment for safe and secure installation per authorized code jurisdictions and proper function.(see Secure Attachment note below)
4) All file cabinets require counter balances except where installed below a shared top or otherwise attached.

ADA CODE COMPLIANCE NOTES

In order to meet the needs of persons with disabilities, when applicable, all fixtures, furnishings and equipment items shall comply with

- current Connecticut **State Building Code** including **2009 ICC/ANSI A117.1**;
- Section 504 of the Rehabilitation Act 1973 including **current ADA Standards for Accessible Design** and Section 504 Regulations; and
- Americans with Disabilities Act Title II including the **current ADA Standards for Accessible Design** and ADA Regulations.

Accessible knee and toe clearance shall comply with **current ADA Standards for Accessible Design**, Section 306.
Compliance with the current **Connecticut State Fire Safety Code** and current O.S.H.A. - Title 29/Labor is also required.

The items shall include, but are not limited to fixtures, furnishings, equipment, workstations (including built-ins), laboratory fume hoods, darkroom equipment, welding stations, shop equipment, etc.

SECURE ATTACHMENT OF FF&E AND TECHNOLOGY ITEMS

To ensure proper attachment of Fixtures, Furnishings & Equipment items, including any Technology items, where “items” are attached to wall, ceiling, overhead structure, and/or floor, Contractor shall provide information adequate for architect to verify items, attached to wall, ceiling, and/or floor are attached securely and per manufacturer’s recommendations. Architect’s review may be implemented during submittal process.
Contractor shall provide struts, hangers, fasteners, safety harnesses, channels, bolts, screws, rods, etc. to securely attach items to existing structure as required to meet field conditions and meet applicable codes.

Meriden Public Library Renovations

Meriden, CT

FF&E Item Data Sheets

Item Code: L.06 **Category:** AG **Model:** Hampton Banquette **Total Quantity:** 3

Item: Serpentine Booth **MFG:** Agati

Dimensions: 96"w x 48"d x 42"o.h.
Seat Height 19"

Description: Curved Booth Seating to create Serpentine Shape;
Two Curved Banquettes, 180 degree curve with cushioned seat and back, metal legs; Upholstered Screen.

Finish: Upholstery for Screen: Fabric D - COM, Momentum, Pattern: Mandala, Color: Buttercup, Add Incase Stain Resistant Finish; NOTE: LARGE MOTIF IN PATTERN SHALL BE CENTERED TO EACH PANEL AND ALIGNED TO ADJACENT PANEL(S) ON BOTH BACK AND FRONT SIDES TO CONTINUE AND MATCH PATTERN. PROVIDE SHOP DRAWINGS FOR APPROVAL.
Upholstery for Back: Frabric B - COM, Mayer Fabrics, Pattern: Editor, Color: Firebrick, WC920-011, Crypton;
Upholstery for Seat: Fabric A - COM, Momentum, Pattern: Covercloth, Color: Platinum, Crypton Green;
Legs: Anodized Aluminum.

Options:

Addenda Notes:

Room #	Room Name	Qnty
A122	Reading Area	3

Room #	Room Name	Qnty

Meriden Public Library Renovations

Meriden, CT

FF&E Item Data Sheets

Item Code: **C.01** **Category:** ALL **Model:** Entail **Total Quantity:** 14

Item: Office Task Chair **MFG:** Allseating

Dimensions: Overall: 23.5”w x 23.5”d x 37”- 40.75”h
Seat: 18.5”w x 18.75”d x 16”- 21.5”h

Description: Task Chair, Midback w/Arms. Mesh back. Upholstered Seat.
Basic synchro-tilt mechanism, includes pneumatic height adjustment on 5 star base; **Adjustable Carpet Casters;**
Dual function arms that are height adjustable with arm caps that move front to back; Adjustable width Brackets (Knob);
Seat Slider; Lumbar Support.
Weight Limit 325lbs

Finish: Seat Fabric: Maharam, Medium 463490, 003 Alloy; W/ Standard Stain Repellent finish.
Back Mesh: M1-Maize;
Base - Nylon: Black.

Options:

Addenda Notes:

Room #	Room Name	Qnty
102	Children's Section	2
106B	Office	1
A110	Service Desk	5

Room #	Room Name	Qnty
106	Staff	4
108	Teen Area	1
A122	Reading Area	1

Meriden Public Library Renovations

Meriden, CT

FF&E Item Data Sheets

Item Code: **C.01A** **Category:** ALL **Model:** Entail **Total Quantity:** 4

Item: Office Task Chair **MFG:** Allseating

Dimensions: Overall: 23.5”w x 23.5”d x 37”- 40.75”h
Seat: 18.5”w x 18.75”d x 16”- 21.5”h

Description: Task Chair, Midback w/Arms. Mesh back. Upholstered Seat.
Basic synchro-tilt mechanism, includes pneumatic height adjustment on 5 star base; **Dual Surface Casters;**
Dual function arms that are height adjustable with arm caps that move front to back; Adjustable width Brackets (Knob);
Seat Slider; Lumbar Support.
Weight Limit 325lbs

Finish: Seat Fabric: Maharam, Medium 463490, 003 Alloy; W/ Standard Stain Repellent finish.
Back Mesh: M1-Maize;
Base - Nylon: Black.

Options:

Addenda Notes:

Room #	Room Name	Qnty
103	Workroom	4

Room #	Room Name	Qnty

Meriden Public Library Renovations

Meriden, CT

FF&E Item Data Sheets

Item Code: **C.01H** **Category:** ALL **Model:** Entail **Total Quantity:** 1

Item: Office Task Chair **MFG:** Allseating

Dimensions:
Overall: 37”- 40.75”Hx 23.5”W x 23.5”D
Seat: 16”- 21.5” x 18.5”W x 18.75”D

Description:
Task Chair, Midback w/Arms. Mesh back. Upholstered Seat.
Basic synchro-tilt mechanism, includes pneumatic height adjustment on 5 star base; **Casters for hard floor;**
Dual function arms that are height adjustable with arm caps that move front to back; Adjustable width Brackets (Knob);
Seat Slider; **High Seat Cylinde**r;
Lumbar Support.
Weight Limit 325lbs

Finish:
Seat Fabric: Maharam, Medium 463490, 003 Alloy; W/ Standard Stain Repellent finish.
Back Mesh: M1-Maize;
Base - Nylon: Black.

Options:

Addenda Notes:

Room #	Room Name	Qnty
101A	Welcome/Security	1

Room #	Room Name	Qnty

Meriden Public Library Renovations

Meriden, CT

FF&E Item Data Sheets

Item Code: **CC.01** **Category:** ANC **Model:** Lotus Jr -Lily Cart w/ pads **Total Quantity:** 1

Item: Cushion Caddy w/10 cushions - Yellow **MFG:** Fomcore

Dimensions: 20"dia x 37"h
Cushions: 18" dia x 3"h

Description: Cart: Holds (10) 3" cushions;
Powdercoated steel frame; Metal Inserts w/casters;
Cushions: Reinforced seams and stitching
• Lifetime warranty
• All foam construction
• Fully zippered

Finish: Cushion Colors: Designtex, Pattern: Beguiled by the Wild 3043-201, Color: Gold Finch.

Options:

Addenda Notes:

Room #	Room Name	Qnty
102A	Story Area	1

Room #	Room Name	Qnty

Meriden Public Library Renovations

Meriden, CT

FF&E Item Data Sheets

Item Code: **CC.02** **Category:** ANC **Model:** Lotus Jr -Lily Cart w/ pads **Total Quantity:** 1

Item: Cushion Caddy w/10 cushions - Blue **MFG:** Fomcore

Dimensions: 20"dia x 37"h
Cushions: 18" dia x 3"h

Description: Cart: Holds (10) 3" cushions;
Powdercoated steel frame; Metal Inserts w/casters;
Cushions: Reinforced seams and stitching
• Lifetime warranty
• All foam construction
• Fully zippered

Finish: Cushion Color: Designtex, Pattern: Beguiled by the Wild 3043-405, Color: Parakeet.

Options:

Addenda Notes:

Room #	Room Name	Qnty
102A	Story Area	1

Room #	Room Name	Qnty

Meriden Public Library Renovations

Meriden, CT

FF&E Item Data Sheets

Item Code: CC.03 **Category:** ANC **Model:** Lotus Jr -Lily Cart w/ pads **Total Quantity:** 1

Item: Cushion Caddy w/10 cushions - Orange **MFG:** Fomcore

Dimensions: 20"dia x 37"h
Cushions: 18" dia x 3"h

Description: Cart: Holds (10) 3" cushions;
Powdercoated steel frame; Metal Inserts w/casters;
Cushions: Reinforced seams and stitching
• Lifetime warranty
• All foam construction
• Fully zippered

Finish: Cushion Color: Mayer Fabrics, Pattern: Faux Leather, Florentino, Color: Mango, FT-029.

Options:

Addenda Notes:

Room #	Room Name	Qnty
102A	Story Area	1

Room #	Room Name	Qnty

Meriden Public Library Renovations

Meriden, CT

FF&E Item Data Sheets

Item Code: D.01 **Category:** ANC **Model:** Nomad Desks **Total Quantity:** 2

Item: Service Desk **MFG:** Media Technologies

Dimensions: 75"w x 24"d x 29"h worksurface x 35"h Transaction top

Description: Curved Desk w/ Left Transaction Top; With (2) Grommets on worksurface;
Tops are 1¼" thick, three ply 45# particle board construction with .050" high pressure laminate top surface and a .030" phenolic backer. Edge is 3mm PVC with a 1/8" radius top and bottom. Tops are attached to the frames and mounted via 1/4"-20 inserts and bolts;
Case: Floating curved front panels are self-edged high pressure laminate. Face panels have embedded threaded metal inserts to accept machine threaded connecting hardware for metal-to-metal fastener contact to steel chassis frames. End panel inserts are selfedged high pressure laminate panels.
Steel Chassis Frame: Frame shall be a welded assembly of 1-1/4" square 14 gauge steel tube, drilled and tapped to receive casters and bored for connecting hardware.
Casters: 100mm Heavy Duty swivel casters with brake, 5 total casters.

Finish: HPL for Worksurface: Standard, Formica Amber Maple 7012-58;
HPL for End Panel Inserts: Standard, Formica Amber Maple 7012-58;
HPL for curved Front Panel at Worksurface: Standard, Formica Citadel Wrap 5882-58;
HPL for curved Front Panel at Transacation Surface: Standard, Formica Amber Maple 7012-58;
PVC Edge: Fusion Maple Rehau CP20564;
Powder Coat: Silver 809.

Options:

Addenda Notes:

Room #	Room Name	Qnty
107	Ref Area	1

Room #	Room Name	Qnty
108	Teen Area	1

Meriden Public Library Renovations

Meriden, CT

FF&E Item Data Sheets

Item Code: **MB.03** **Category:** ANC **Model:** 5369JC **Total Quantity:** 2

Item: Book Browser-single sided, mobile **MFG:** Jonti-craft

Dimensions: 48"w x 16"d x 29.5"h

Description: Single Sided Book Browser, Divided bins with front-facing label holders; KYDZSafe edges, Birch plywood. MAXBracket heavy duty hidden casters

Finish: Birch plywood, clear "KYDZ Tuff" UV finish

Options:

Addenda Notes:

Room #	Room Name	Qnty
102	Children's Section	2

Room #	Room Name	Qnty

Meriden Public Library Renovations

Meriden, CT

FF&E Item Data Sheets

Item Code: **O.01** **Category:** ANC **Model:** F005 **Total Quantity:** 5

Item: Round Ottoman, 18"dia - Blue **MFG:** Fomcore

Dimensions: 18" dia x 14"h

Description: Ottoman Series - Round;
Reinforced seams and stitching; Lifetime warranty;
All foam construction; 1/2" MDF base board with metal inserts and ajustable glides.

Finish: Upholstery: Designtex, Pattern: Beguiled by the Wild, Color: Parakeet 3043-405.

Options:

Addenda Notes:

Room #	Room Name	Qnty
102	Children's Section	3

Room #	Room Name	Qnty
102E	Children's Stacks	2

Meriden Public Library Renovations

Meriden, CT

FF&E Item Data Sheets

Item Code: **O.02** **Category:** ANC **Model:** F005 **Total Quantity:** 4

Item: Round Ottoman, 18"dia - Yellow **MFG:** Fomcore

Dimensions: 18" dia x 14"h

Description: Ottoman Series - Round;
Reinforced seams and stitching; Lifetime warranty;
All foam construction; 1/2" MDF base board with metal inserts and ajustable glides.

Finish: Upholstery: Designtex, Pattern: Beguiled by the Wild, Color: Gold Finch 3043-201.

Options:

Addenda Notes:

Room #	Room Name	Qnty
102	Children's Section	3

Room #	Room Name	Qnty
102E	Children's Stacks	1

Meriden Public Library Renovations

Meriden, CT

FF&E Item Data Sheets

Item Code: **O.03** **Category:** ANC **Model:** F005 **Total Quantity:** 4

Item: Round Ottoman, 18"dia - Orange **MFG:** Fomcore

Dimensions: 18" dia x 14"h

Description: Ottoman Series - Round;
Reinforced seams and stitching; Lifetime warranty;
All foam construction; 1/2" MDF base board with metal inserts and ajustable glides.

Finish: Upholstery: Mayer Fabrics, Pattern: Faux Leather, Florentino, Color: Mango FT-029.

Options:

Addenda Notes:

Room #	Room Name	Qnty
102	Children's Section	3

Room #	Room Name	Qnty
102E	Children's Stacks	1

Meriden Public Library Renovations

Meriden, CT

FF&E Item Data Sheets

Item Code: L.03 **Category:** ERG **Model:** Malibu **Total Quantity:** 2

Item: 2-Seat Bench with table **MFG:** ERG International

Dimensions: 66"l x 27"d x 18"h

Description: 66"l Backless unit with center online bench, Laminate (6 Legs);
Frame assembly is constructed of multi-ply hardwood, with tongue and groove construction. No sag-springs along with interlocking helicoil springs to prevent sagging;
Seat foam bonded to all sides of hardwood frame. Seat cushions are 4” graded, high resiliency (H.R.) block foam covered entirely with special bonded polyester fiber to protect upholstery.
Tapered Metal Legs w/ adjustable glides.

Finish: Upholstery: Designtex, Pattern: Ulster Upholstery, Color: Pewter 3957-803;
Metal Legs: Silver (Brushed Aluminum)

Options:

Addenda Notes:

Room #	Room Name	Qnty
A110	Service Desk	2

Room #	Room Name	Qnty

Meriden Public Library Renovations

Meriden, CT

FF&E Item Data Sheets

Item Code: L.05 **Category:** ERG **Model:** Raven, Modular - 8318, 8334 **Total Quantity:** 2

Item: Curved Modular Seating **MFG:** ERG International

Dimensions:
60 Deg - 67"w x 32.5"d x 33"o.h;
30 Deg Backless - 35"w x 29"d x 18"h;
Seat Height 18".

Description:
Qty (2) Inside 60 Degree Modular Curve Unit w/ Back (5 Legs) + Qty (1) 30 Degree Modular Curve Online Backless Unit;
Upholstery / Foam - All foam fully bonded to frame. Seat cushions are 4" graded high resiliency (H.R.) block foam with back 3" (H.R.) foam, covered entirely with special bonded polyester fiber to protect final upholstery.
Frame Construction- Frame assembly is constructed of multi-ply hardwood, with tongue and groove construction. No sag-springs are installed in seat & back along with interlocking helicoil springs to prevent sagging and provide additional lower back and seat support.
Base/ Leg: 2"RD X 3"H round tubular steel legs standard.
W/ Rachet Ganging Device to gang all 3 units.

Finish:
Upholstery for Back: COM, Knoll, Pattern: Abacus, Color: Jellybean K715/8; Add Stain Resistant Finish; NOTE: THIS FABRIC IS ON RESERVE FOR THE PROJECT, CONTACT KNOLL REP RYANNE SANDERS FOR RESERVE # AND DETAILS, rsanders@knoll.com;
Upholstery for seat: COM, Maharam, Pattern: Mode 466337, Color: 023 Alder.
Legs: Powdercoat, Silver (Brushed Aluminum).

Options:
On front side of backless unit, Include qty (1) Dean Z Power Unit w/ USB A&C; (2) Electrical outlets; (1) USB-A and (1) USB-C; Cut-out 1 15/16" x 4 13/16"; (1) Cord 108"l Right Angle Soft Plug; Finish: Fog; Location A.

Addenda Notes:

Room #	Room Name	Qnty
A123	Computers	2

Room #	Room Name	Qnty

Meriden Public Library Renovations

Meriden, CT

FF&E Item Data Sheets

Item Code: L.01L **Category:** INT **Model:** Rendezvous Lounge RU-1 **Total Quantity:** 2

Item: Tablet Arm Lounge Chair-Left - Red **MFG:** Integra Seating

Dimensions: 33"w x 32"d xx 35"o.h.;
21"sw x 20"sd x 18"sh.

Description: Arm Lounge Chair w/Tablet Arm, **(Left)**.
Superior Strength: Chairs pass 1200 lbs Drop Test / 2000 lbs Static Capacity;
Certified Clean Air Gold; Replaceable and Recoverable Components;Steel Inner Construction; Dymetrol Suspension;
Higher Back.

Finish: Upholstery for Back and Sides: Mayer Fabrics, Patten: Meander, Color: Pomegranate 419-001; Include Alta Stain Resistant Finish;
Upholstery for Seat Only: Mayer Fabrics, Pattern - Cosmopolitan, Color - Granite WC968-010;
Wood: Maple, Vanilla.
Laminate Table: Wilsonart Fusion Maple.

Options: Arms - W/ Wood Armcaps;
Legs: W/ Hide and Go Mobility on front two legs;
Tablet Arm: 300lb capacity, Laminate w/ Plywood Core.
Recessed Pull Handle;
Combination Fabrics.

Addenda Notes:

Room #	Room Name	Qnty
A122	Reading Area	1

Room #	Room Name	Qnty
A123	Computers	1

Meriden Public Library Renovations

Meriden, CT

FF&E Item Data Sheets

Item Code: **L.01R** **Category:** INT **Model:** Rendezvous Lounge RU-1 **Total Quantity:** 10

Item: Tablet Arm Lounge Chair-Right - Red **MFG:** Integra Seating

Dimensions: 33"w x 32"d xx 35"o.h.;
21"sw x 20"sd x 18"sh.

Description: Arm Lounge Chair w/Tablet Arm, **(Right)**.
Superior Strength: Chairs pass 1200 lbs Drop Test / 2000 lbs Static Capacity;
Certified Clean Air Gold; Replaceable and Recoverable Components;Steel Inner Construction; Dymetrol Suspension;
Higher Back.

Finish: Upholstery for Back and Sides: Mayer Fabrics, Patten: Meander, Color: Pomegranate 419-001; Include Alta Stain Resistant Finish;
Upholstery for Seat Only: Mayer Fabrics, Pattern - Cosmopolitan, Color - Granite WC968-010;
Wood: Maple, Vanilla.
Laminate Table: Wilsonart Fusion Maple.

Options: Arms - W/ Wood Armcaps;
Legs: W/ Hide and Go Mobility on front two legs;
Tablet Arm: 300lb capacity, Laminate w/ Plywood Core.
Recessed Pull Handle;
Combination Fabrics.

Addenda Notes:

Room #	Room Name	Qnty
111	Periodicals	2
A123	Computers	7

Room #	Room Name	Qnty
A122	Reading Area	1

Meriden Public Library Renovations

Meriden, CT

FF&E Item Data Sheets

Item Code: **L.01XL** **Category:** INT **Model:** Rendezvous Lounge RUO-1 **Total Quantity:** 1

Item: Oversize Lounge Chair **MFG:** Integra Seating

Dimensions: 38"w x 32"d xx 35"o.h.;
21"sw x 20"sd x 18"sh.

Description: Arm Lounge Chair
Superior Strength: Chairs pass 1200 lbs Drop Test / 2000 lbs Static Capacity;
Certified Clean Air Gold; Replaceable and Recoverable Components;Steel Inner Construction; Dymetrol Suspension.

Finish: Upholstery: Mayer Fabrics, Pattern: Fanfare, Color: Fiesta WC965-009, Crypton.
Wood: Standard Maple Wood, Vanilla.

Options: Legs: W/ Hide and Go Mobility on front two legs;
Recessed Pull Handle.

Addenda Notes:

Room #	Room Name	Qnty
102	Children's Section	1

Room #	Room Name	Qnty

Meriden Public Library Renovations

Meriden, CT

FF&E Item Data Sheets

Item Code: **L.01Y** **Category:** INT **Model:** Rendezvous Lounge RU-1 **Total Quantity:** 8

Item: Tablet Arm Lounge Chair-Right - Yellow **MFG:** Integra Seating

Dimensions: 33"w x 32"d xx 35"o.h.;
21"sw x 20"sd x 18"sh.

Description: Arm Lounge Chair w/Tablet Arm, **(Right)**.
Superior Strength: Chairs pass 1200 lbs Drop Test / 2000 lbs Static Capacity;
Certified Clean Air Gold; Replaceable and Recoverable Components;Steel Inner Construction; Dymetrol Suspension;
Higher Back.

Finish: Upholstery for Back and Sides: Designtex, Pattern: Hint, Color: Canary; Include Alta Stain Resistant Finish;
Upholstery for Seat Only: Mayer Fabrics, Pattern - Cosmopolitan, Color - Granite WC968-010;
Wood: Maple, Vanilla.
Laminate Table: Wilsonart Fusion Maple.

Options: Arms - W/ Wood Armcaps;
Legs: W/ Hide and Go Mobility on front two legs;
Tablet Arm: 300lb capacity, Laminate w/ Plywood Core.
Recessed Pull Handle;
Combination Fabrics.

Addenda Notes:

Room #	Room Name	Qnty
111	Periodicals	2
A123	Computers	4

Room #	Room Name	Qnty
A122	Reading Area	2

Meriden Public Library Renovations

Meriden, CT

FF&E Item Data Sheets

Item Code: L.02 **Category:** INT **Model:** Summit with Casters (Alpine Collection) **Total Quantity:** 4

Item: Round Back Lounge Chair - Mobile **MFG:** Integra

Dimensions: 28"W X 28"D X 17.5"s.h x 30.5"H

Description: Round Back Lounge Chair with 4 non-locking casters;
Lifetime Warranty; Superior Strength - Chairs pass 1000 lbs Drop Test / 2000 lbs capacity; Healthier Hospitals Compliant; Certified Clean Air Gold; Clean-Out Between Seat and Back; Replaceable and Recoverable Components; Dymetrol Suspension.

Finish: Upholstery: Sina Pearson, Pattern - Fling 497, Color - 27 Tawny, Crypton Green;
Wood Arm Cap: Standard Hard Maple - Vanilla.

Options: Include Solid Wood Arm Caps, Contoured.

Addenda Notes:

Room #	Room Name	Qnty
A122	Reading Area	2

Room #	Room Name	Qnty
A123	Computers	2

Meriden Public Library Renovations

Meriden, CT

FF&E Item Data Sheets

Item Code: L.02A **Category:** INT **Model:** Summit with Casters (Alpine Collection) **Total Quantity:** 1

Item: Round Back Lounge Chair - Mobile **MFG:** Integra

Dimensions: 28"W X 28"D X 17.5"s.h x 30.5"H

Description: Round Back Lounge Chair with 4 non-locking casters;
Lifetime Warranty; Superior Strength - Chairs pass 1000 lbs Drop Test / 2000 lbs capacity; Healthier Hospitals Compliant; Certified Clean Air Gold; Clean-Out Between Seat and Back; Replaceable and Recoverable Components; Dymetrol Suspension.

Finish: Upholstery: Mayer Fabrics, Pattern: Collage, Color: Tiger Lily 417-009;
Wood Arm Cap: Standard Hard Maple - Vanilla.

Options: Include Solid Wood Arm Caps, Contoured.

Addenda Notes:

Room #	Room Name	Qnty
102E	Children's Stacks	1

Room #	Room Name	Qnty

Meriden Public Library Renovations

Meriden, CT

FF&E Item Data Sheets

Item Code: L.08L **Category:** INT **Model:** Coastal Collection, Bay Wood **Total Quantity:** 1

Item: Teen Lounge Chair, Left Tablet **MFG:** Integra

Dimensions: Chair 22"w x 29.5" d x 37"h
Seat Height 19"

Description: Chair w/ **Left** Tablet-arm; Tapered Back Style;
Lifetime Warranty; Chairs have 2000 lbs Static Capacity / 1000 lbs Dynamic Capacity; Healthier Hospitals Compliant;
Certified Clean Air Gold;
Unique 1-piece Seat/Back with Cove Wipe-Out Design;
Replaceable and Recoverable Components; Hard Maple;
Dymetrol Suspension.

Finish: Upholstery: COM, HBF Textiles, Pattern: Roundabout 1005, Color: 43 Swindon, Include Alta Stain Resistant finish.
Tablet Arm: Pionite, Hardrock Maple;
Powdercoat: Brushed Chrome;
Recessed Pull: Gray.

Options: 5" Heavy Duty Casters;
Laminate/Plywood Edge Tablet installed on Left side;
Recessed Pull Handle.

Addenda Notes:

Room #	Room Name	Qnty
108	Teen Area	1

Room #	Room Name	Qnty

Meriden Public Library Renovations

Meriden, CT

FF&E Item Data Sheets

Item Code: **L.08R** **Category:** INT **Model:** Coastal Collection, Bay Wood **Total Quantity:** 3

Item: Teen Lounge Chair, Right Tablet **MFG:** Integra

Dimensions: Chair 22"w x 29.5" d x 37"h
Seat Height 19"

Description: Chair w/ **Right** Tablet-arm; Tapered Back Style;
Lifetime Warranty; Chairs have 2000 lbs Static Capacity / 1000 lbs Dynamic Capacity; Healthier Hospitals Compliant;
Certified Clean Air Gold;
Unique 1-piece Seat/Back with Cove Wipe-Out Design;
Replaceable and Recoverable Components; Hard Maple;
Dymetrol Suspension.

Finish: Upholstery: COM, HBF Textiles, Pattern: Roundabout 1005, Color: 43 Swindon, Include Alta Stain Resistant finish.
Tablet Arm: Pionite, Hardrock Maple;
Powdercoat: Brushed Chrome;
Recessed Pull: Gray.

Options: 5" Heavy Duty Casters;
Laminate/Plywood Edge Tablet installed on Right side;
Recessed Pull Handle.

Addenda Notes:

Room #	Room Name	Qnty
108	Teen Area	3

Room #	Room Name	Qnty

Meriden Public Library Renovations

Meriden, CT

FF&E Item Data Sheets

Item Code: C.02 **Category:** KI **Model:** Strive **Total Quantity:** 144

Item: Sled Base Side Chair w/ Uph. Seat - Yellow **MFG:** KI

Dimensions: 19 1/2"w x 22 1/4"d x 18"s.h. x 32 1/2"o.h.

Description: High Density Stacker; Armless;
Chair Frame: Sled Base, 7/16" solid steel rod, all joints welded; finished in bright nickel-chrome;
W/ Flex Back; Injection-molded Polypropylene Shell;
Poly Back and Upholstered Seat.
No Glides, for carpeted floors.

Finish: Poly: Blue Grey PGR;
Upholstery: COM, Mayer Fabrics, Pattern: Form, Color: Canary; Crypton.
Frame: Chrome CH.

Options:

Addenda Notes:

Room #	Room Name	Qnty
102	Children's Section	16
108	Teen Area	16
A123	Computers	12
A127	Seminar	12
A129	Meeting Room	6

Room #	Room Name	Qnty
102A	Story Area	12
A122	Reading Area	44
A126	Meeting Room	20
A128	Meeting Room	6

Meriden Public Library Renovations

Meriden, CT

FF&E Item Data Sheets

Item Code: C.03 **Category:** KI **Model:** Strive **Total Quantity:** 40

Item: Sled Base Side Chair w/ Uph. Seat - Grey **MFG:** KI

Dimensions: 19 1/2"w x 22 1/4"d x 18"s.h. x 32 1/2"o.h.

Description: High Density Stacker; Armless;
Chair Frame: Sled Base, 7/16" solid steel rod, all joints welded; finished in bright nickel-chrome;
W/ Flex Back; Injection-molded Polypropylene Shell;
Poly Back and Upholstered Seat.
PVC/Rubber Non-Skid Glides for Vinyl floor.

Finish: Poly: Blue Grey PGR;
Upholstery: COM, HBF Textiles, Pattern: Folded Lines, Color: 87 Charcoal & Gold; Include Alta Stain Resistant Finish.
Frame: Chrome CH.

Options:

Addenda Notes:

Room #	Room Name	Qnty
105	Multi Purpose Program Rm	40

Room #	Room Name	Qnty

Meriden Public Library Renovations

Meriden, CT

FF&E Item Data Sheets

Item Code: **C.04** **Category:** KI **Model:** Strive, Task **Total Quantity:** 49

Item: Computer Chair **MFG:** KI

Dimensions: 27 1/2"w x 27 1/2"d x 18 1/4"-23 1/4"s.h. X 32 3/4"-37 3/4"o.h.

Description: Task Armless Chair w/ Flex Back;
Pneumatic height adjustable; Injection-molded Polypropylene Shell; Poly Back w/ upholstered seat;
Armless;
Casters for Carpet.

Finish: Poly Shell: Blue Grey PGR;
Base & Casters: Warm Grey WG;
Upholstery: COM, Mayer Fabrics, Pattern: Form, Color: Canary; Crypton.

Options:

Addenda Notes:

Room #	Room Name	Qnty
102	Children's Section	1
108	Teen Area	9

Room #	Room Name	Qnty
107	Ref Area	1
A123	Computers	38

Meriden Public Library Renovations

Meriden, CT

FF&E Item Data Sheets

Item Code: C.05 **Category:** KI **Model:** Strive **Total Quantity:** 14

Item: Stool @ Café Tables **MFG:** KI

Dimensions: 19 1/2"w x 24 1/2"d x 30"s.h. x 44 1/2"o.h.

Description: High Density Stack Stool; 30" seat height; Armless;
Stool Frame: Sled Base, 7/16" solid steel rod, all joints welded; finished in bright nickel-chrome;
W/ Flex Back; Injection-molded Polypropylene Shell;
Poly Back and Upholstered Seat.
No Glides, for carpeted floors.

Finish: Poly: Blue Grey PGR;
Upholstery: COM, Mayer Fabrics, Pattern: Form, Color: Canary; Crypton.
Frame: Chrome CH.

Options:

Addenda Notes:

Room #	Room Name	Qnty
108	Teen Area	8

Room #	Room Name	Qnty
A122	Reading Area	6

Meriden Public Library Renovations

Meriden, CT

FF&E Item Data Sheets

Item Code: C.06 **Category:** KI **Model:** Strive **Total Quantity:** 201

Item: Sled Base Stacking Chair **MFG:** KI

Dimensions: 19 1/2"w x 22 1/4"d x 18"s.h. x 32 1/2"o.h.

Description:
High Density Stacker;
Armless;
Chair Frame: Sled Base, 7/16" solid steel rod, all joints welded; finished in bright nickel-chrome;
W/ Flex Back; Injection-molded Polypropylene Shell;
Poly Seat and Back Sled Base;
Ganging plastic glides for Vinyl floor.

Finish:
Poly: Cayenne PCY;
Base: Chrome CH.

Options:

Addenda Notes:

Room #	Room Name	Qnty
A104	Control Rm	1
A131	Multipurpose Room	95
A133	Multipurpose Room	48

Room #	Room Name	Qnty
A105	Service	1
A132	Multipurpose Room	56

Meriden Public Library Renovations

Meriden, CT

FF&E Item Data Sheets

Item Code: **C.10** **Category:** KI **Model:** Intellect Wave **Total Quantity:** 13

Item: Child Chair, 4-leg **MFG:** KI

Dimensions: 14.8"w x 15"d x 13" s.h. x 23"o.h.

Description: 4-Leg Base, 13"s.h. Children's Chair;
Seat and back of one continuous polypropylene shell;
Frame of elliptical steel tubing;
W/ Nylon/Plastic glides for Carpeted and Vinyl floors.

Finish: Shell Color: Nemo PNE;
Frame: Chrome.

Options:

Addenda Notes:

Room #	Room Name	Qnty
102	Children's Section	5

Room #	Room Name	Qnty
104	Project Room	8

Meriden Public Library Renovations

Meriden, CT

FF&E Item Data Sheets

Item Code: **C.11** **Category:** KI **Model:** Intellect Wave Task **Total Quantity:** 8

Item: Computer Chair - Child **MFG:** KI

Dimensions: 24.5"w x 24.5"d x 25.5 - 28.25"h
Seat: 14.25"w x 14"d x **14-16.75"h**

Description: Task Chair - Medium;
One-piece contoured shell made of static-free, high-impact, textured polypropylene; 12-gauge 5-star base plate powder coated black with a lever-activated pneumatic cylinder for seat height adjustment. **Carpet casters.**

Finish: Poly shell: Nemo PNE;
Base: Warm Gray.

Options:

Addenda Notes:

Room #	Room Name	Qnty
102	Children's Section	8

Room #	Room Name	Qnty

Meriden Public Library Renovations

Meriden, CT

FF&E Item Data Sheets

Item Code: **CT.01** **Category:** KI **Model:** HRDPT **Total Quantity:** 6

Item: Chair Cart **MFG:** KI

Dimensions: 22 3/8"w x 25 5/8"d

Description: Transport Dolly for Stack Chair C.06;
Tubular and plate steel welded together. 5" casters: two fixed, two swivel. Powder-coated finish.
Stacks upto 30 chairs.

Finish: Black Powder coat finish.

Options:

Addenda Notes:

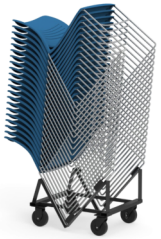

Room #	Room Name	Qnty
A107	Storage	6

Room #	Room Name	Qnty

Meriden Public Library Renovations

Meriden, CT

FF&E Item Data Sheets

Item Code: L.10 **Category:** KI **Model:** My Place Lounge **Total Quantity:** 2

Item: Teen Gaming Bench Seating **MFG:** KI

Dimensions: 76 1/2"w x 26"d x 32"o.h.
Seat Height 18".

Description: Inside Back, 90 Degree Curve, 32" Low Back, Contrast Fabrics;
Poly Feet;
All seat and back frames are constructed of 3/4" laminated hardwood plywood, CNC cut. All main frame joints are nailed and glued in addition to interlocking joinery across all stress points;
Double-needle stitched at all primary seams;
Include Ganging.

Finish: Upholstery for Base and Seat - 1&2 = Pallas, Pattern: Frieze, Color: Highline; W. Stain Resistant Finish and Acrylic Backing;
Upholstery for Back - 3 = Pallas, Pattern: Frieze, Color: Lewis; W/ Stain Resistant finish and Acrylic Backing.

Options:

Addenda Notes:

Room #	Room Name	Qnty
108	Teen Area	2

Room #	Room Name	Qnty

Meriden Public Library Renovations

Meriden, CT

FF&E Item Data Sheets

Item Code: O.04 **Category:** KI **Model:** My Place Ottomans, Hexagon **Total Quantity:** 5

Item: Hexagon Ottoman **MFG:** KI

Dimensions: 20 3/4"w x 18"d x 18"s.h.

Description: Standard Size Hexagon shaped ottoman;
Frame constructed of 3/4" laminated plywood, CNC cut; High-Desnity foam; Double-needle stitched at all primary seams;
Base w/ Concealed glides.

Finish: Upholstery: Pallas Textiles, Pattern: Frieze
Color: Bank 27.270.189 - Qty (2)
Color - Lewis 27.270.179 - Qty (1)
Color - Westbeth 27.270.123 - Qty (2)

Options:

Addenda Notes:

Room #	Room Name	Qnty
108	Teen Area	5

Room #	Room Name	Qnty

Meriden Public Library Renovations

Meriden, CT

FF&E Item Data Sheets

Item Code: T.08 **Category:** KI **Model:** Pillar- My Place, Inside Curve **Total Quantity:** 2

Item: Curved Table @ Teens **MFG:** KI

Dimensions: 110"l x 24"d x 42"h

Description: Post Leg table, Café Height, 42"h; W/ Glides
P.Lam Top w/ 74P Edge; Perforated Steel Modesty Panel;
Ganger kit w/ 2 ganging hooks.

Finish: Edge: Kensington Maple EKM;
P.lam: Kensington Maple, 10776-60 LKM;
Paint: Starlight Silver Metallic SX.

Options: W/ (2) Villa modules w/ USB and vertical and horizintal wire management;
9' Cord.

Addenda Notes:

Room #	Room Name	Qnty
108	Teen Area	2

Room #	Room Name	Qnty

Meriden Public Library Renovations

Meriden, CT

FF&E Item Data Sheets

Item Code: T.09L **Category:** KI **Model:** Pillar, Reduction **Total Quantity:** 2

Item: Computer Table, Left **MFG:** KI

Dimensions: 60"w x 30"w x 24"d x 29"h

Description: Post Leg table 29"h;
W/ Casters, 2 locking and 2 non-locking, black wheel and silver hub.
6" Difference between short and long end.
P.Lam Top w/ 74P Edge.

Finish: Edge: Kensington Maple EKM;
P.lam: Kensington Maple, 10776-60 LKM;
Paint: Starlight Silver Metallic SX.
Grommet: Warm Grey.

Options: One plastic grommet w/ wire management.

Addenda Notes:

Room #	Room Name	Qnty
108	Teen Area	2

Room #	Room Name	Qnty

Meriden Public Library Renovations

Meriden, CT

FF&E Item Data Sheets

Item Code: **T.09R** **Category:** KI **Model:** Pillar, Reduction **Total Quantity:** 2

Item: Computer Table, Right **MFG:** KI

Dimensions: 60"w x 30"w x 24"d x 29"h

Description: Post Leg table 29"h;
W/ Casters, 2 locking and 2 non-locking, black wheel and silver hub.
6" Difference between short and long end.
P.Lam Top w/ 74P Edge.

Finish: Edge: Kensington Maple EKM;
P.lam: Kensington Maple, 10776-60 LKM;
Paint: Starlight Silver Metallic SX.
Grommet: Warm Grey.

Options: One plastic grommet w/ wire management.

Addenda Notes:

Room #	Room Name	Qnty
108	Teen Area	2

Room #	Room Name	Qnty

Meriden Public Library Renovations

Meriden, CT

FF&E Item Data Sheets

Item Code: T.17 **Category:** KI **Model:** Pillar 120 **Total Quantity:** 4

Item: Wavy Café Table @ Adults **MFG:** KI

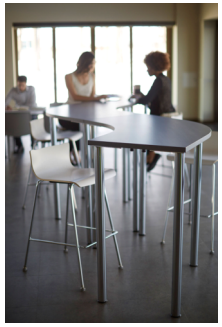

Dimensions: 24"d x 42"h x 120 degree

Description: Post Leg table, Café Height, 42"h; W/ Glides
P.Lam Top w/ 74P Edge; Perforated Steel Modesty Panel;
Ganger kit w/ 2 ganging hooks.

Finish: Edge: Kensington Maple EKM;
P.lam: Kensington Maple, 10776-60 LKM;
Paint: Starlight Silver Metallic SX.

Options: W/ (2) Villa modules w/ USB , (1) per table installed in center of table for acess from both sides.
Wire Management: Include Wire Trough for cord management. Constructed of 18-gauge steel with a powder-coated finish to match legs. Screws provided for attachment to the underside of the tabletop, and tops pre-drilled for wire trough locations.
Vertical Leg Wire Management: A color matched extrusion made of aluminum “snaps” to the Pillar leg, managing cables and wires exiting power modules installed on the tabletop. The extrusion is 12” long - to run full length of leg.

Addenda Notes:

Room #	Room Name	Qnty
A122	Reading Area	4

Room #	Room Name	Qnty

Meriden Public Library Renovations

Meriden, CT

FF&E Item Data Sheets

Item Code: **T.18** **Category:** KI **Model:** Trek **Total Quantity:** 6

Item: Nesting Table **MFG:** KI

Dimensions: 48"w x 30"d x 23"-32"h

Description: Rectangle Table, Pin-Height Adjustable;
Adjustment in 1" increments; T-Base;
P.Lam Top w/ 74P Edge;
Inclue 4 black casters w/ white hub caps, 2 locking.

Finish: Edge: Kensington Maple EKM;
P.lam: Kensington Maple, 10776-60 LKM;
Paint: Starlight Silver Metallic SX.

Options:

Addenda Notes:

Room #	Room Name	Qnty
104	Project Room	6

Room #	Room Name	Qnty

Meriden Public Library Renovations

Meriden, CT

FF&E Item Data Sheets

Item Code: D.02 **Category:** NEV **Model:** Skipper **Total Quantity:** 1

Item: Table/Desk w/ Modesty Panel **MFG:** Nevins

Dimensions: 48"w x 24"d x 29"h

Description: Rectangular table top, fixed w/ **12"h modesty panel**; plastic laminate with 3mm PVC edge LP01,
Metal "T" leg base, w/ Locking casters;
Include (1) center grommet.

Finish: Top: Plastic Laminate: 7909-60 Wilsonart Fusion Maple;
Edge: Fusion Maple;
Base: Powdercoated - BC03 Satin Chrome.

Options: Include Multi Wire Channel horizontal wire manager under table;
Include Wire Management Clips, translucent - 2 sets.

Addenda Notes:

Room #	Room Name	Qnty
A122	Reading Area	1

Room #	Room Name	Qnty

Meriden Public Library Renovations

Meriden, CT

FF&E Item Data Sheets

Item Code: **LT.01** **Category:** NEV **Model:** Adler Drum Table **Total Quantity:** 1

Item: Occasional Table 36" dia. **MFG:** Nevins

Dimensions: 36"dia x 20"h

Description: Round Laminate drum table;
No Power.

Finish: Laminate: Wilsonart, Fusion Maple 7909-60.

Options:

Addenda Notes:

Room #	Room Name	Qnty
A123	Computers	1

Room #	Room Name	Qnty

Meriden Public Library Renovations

Meriden, CT

FF&E Item Data Sheets

Item Code: **LT.02** **Category:** NEV **Model:** Adler Drum Table **Total Quantity:** 4

Item: Occasional Table 36" dia. **MFG:** Nevins

Dimensions: 36"dia x 20"h

Description: Round Laminate drum table;
W/ Power + USB Top Mounted; Include Mousehole and 9.5" cutout in bottom for power connection to floor under Drum.

Finish: Laminate: Wilsonart, Fusion Maple 7909-60.

Options: Include (1) Top-Mounted Cove Round Power/USB COVR2U: Silver.

Addenda Notes:

Room #	Room Name	Qnty
108	Teen Area	1

Room #	Room Name	Qnty
A123	Computers	3

Meriden Public Library Renovations

Meriden, CT

FF&E Item Data Sheets

Item Code: **LT.03** **Category:** NEV **Model:** Adler Drum Table **Total Quantity:** 4

Item: Occasional Table 18" dia **MFG:** Nevins

Dimensions: 18 dia x 24"h

Description: Round Laminate drum table;
W/ Power + USB Top Mounted. Include Mousehole and 9.5" cutout in bottom for power connection to floor under Drum.

Finish: Laminate: Wilsonart, Fusion Maple 7909-60.

Options: Include (1) Top-Mounted Cove Round Power/USB COVR2U: Silver.

Addenda Notes:

Room #	Room Name	Qnty
102	Children's Section	1
A122	Reading Area	1

Room #	Room Name	Qnty
102E	Children's Stacks	1
A123	Computers	1

Meriden Public Library Renovations

Meriden, CT

FF&E Item Data Sheets

Item Code: **T.01** **Category:** NEV **Model:** Skipper **Total Quantity:** 16

Item: Fixed-height base, Rect Table 36 x 60 **MFG:** Nevins

Dimensions: 36"D x 60"W x 29"H

Description: Rectangular table top, plastic laminate with 3mm PVC edge LP01,
Metal "T" leg base, w/ Locking casters.

Finish: Top: Plastic Laminate: 7909-60 Wilsonart Fusion Maple;
Edge: Fusion Maple;
Base: Powdercoated - BC03 Satin Chrome.

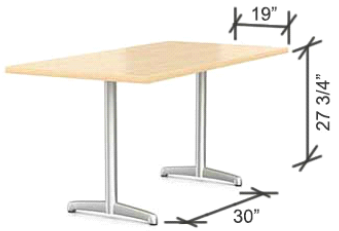

Options:

Addenda Notes:

Room #	Room Name	Qnty
102	Children's Section	4
A122	Reading Area	10

Room #	Room Name	Qnty
111	Periodicals	2

Meriden Public Library Renovations

Meriden, CT

FF&E Item Data Sheets

Item Code: **T.02** **Category:** NEV **Model:** Skipper **Total Quantity:** 2

Item: Round Table, 54 dia **MFG:** Nevins

Dimensions: 54" dia x 29"h

Description: Round table top, plastic laminate with 3mm PVC edge LP01,
Metal "X" leg base, w/ Locking casters.

Finish: Top: Plastic Laminate: 7909-60 Wilsonart Fusion Maple;
Edge: Fusion Maple;
Base: Powdercoated - BC03 Satin Chrome.

Options:

Addenda Notes:

Room #	Room Name	Qnty
A123	Computers	2

Room #	Room Name	Qnty

Meriden Public Library Renovations

Meriden, CT

FF&E Item Data Sheets

Item Code: T.03 **Category:** NEV **Model:** Skipper **Total Quantity:** 2

Item: Teen's Reading Table **MFG:** Nevins

Dimensions: 42"sq x 29"h

Description: Rectangular table top, plastic laminate with 3mm PVC edge LP01,
Metal "X" leg base, w/ Locking casters.

Finish: Top: Plastic Laminate: 7909-60 Wilsonart Fusion Maple;
Edge: Fusion Maple;
Base: Powdercoated - BC03 Satin Chrome.

Options:

Addenda Notes:

Room #	Room Name	Qnty
108	Teen Area	2

Room #	Room Name	Qnty

Meriden Public Library Renovations

Meriden, CT

FF&E Item Data Sheets

Item Code: **T.04** **Category:** NEV **Model:** Skipper **Total Quantity:** 2

Item: Flip-Top Table, 60 x 30 **MFG:** Nevins

Dimensions: 60"w x 30"d x 29"h

Description: Rectangle Table; Flipping & Nesting T-base w/ locking casters.
Plastic laminate with 3mm PVC edge LP01.

Finish: Laminate: 7909-60 Wilsonart Fusion Maple;
Edge: Fusion Maple;
Base:BC.03 Satin Chrome.

Options:

Addenda Notes:

Room #	Room Name	Qnty
108	Teen Area	2

Room #	Room Name	Qnty

Meriden Public Library Renovations

Meriden, CT

FF&E Item Data Sheets

Item Code: **T.05** **Category:** NEV **Model:** Skipper **Total Quantity:** 4

Item: Flip-top Table 72 x 30 **MFG:** Nevins

Dimensions: 72"w x 30"d x 29"h

Description: Rectangle Table; Flipping & Nesting T-base w/ locking casters.
Plastic laminate with 3mm PVC edge LP01.

Finish: Laminate: 7909-60 Wilsonart Fusion Maple;
Edge: Fusion Maple;
Base:BC.03 Satin Chrome.

Options:

Addenda Notes:

Room #	Room Name	Qnty
A127	Seminar	4

Room #	Room Name	Qnty

Meriden Public Library Renovations

Meriden, CT

FF&E Item Data Sheets

Item Code: **T.06** **Category:** NEV **Model:** Skipper **Total Quantity:** 2

Item: Rectangle Table 72 x 36 **MFG:** Nevins

Dimensions: 72"w x 36"d x 29"h

Description: Rectangle Table; T-base w/ locking casters.
Plastic laminate with 3mm PVC edge LP01.

Finish: Laminate: 7909-60 Wilsonart Fusion Maple;
Edge: Fusion Maple;
Base:BC.03 Satin Chrome.

Options:

Addenda Notes:

Room #	Room Name	Qnty
A128	Meeting Room	1

Room #	Room Name	Qnty
A129	Meeting Room	1

Meriden Public Library Renovations

Meriden, CT

FF&E Item Data Sheets

Item Code: T.07 **Category:** NEV **Model:** Skipper **Total Quantity:** 1

Item: Round Table, 48 dia **MFG:** Nevins

Dimensions: 48" dia x 29"h

Description: Round table top, plastic laminate with 3mm PVC edge LP01, Metal "X" leg base.

Finish: Top: Plastic Laminate: 7909-60 Wilsonart Fusion Maple;
Edge: Fusion Maple;
Base: Powdercoated - BC03 Satin Chrome.

Options:

Addenda Notes:

Room #	Room Name	Qnty
113	Meeting Room	1

Room #	Room Name	Qnty

Meriden Public Library Renovations

Meriden, CT

FF&E Item Data Sheets

Item Code: T.10 **Category:** NEV **Model:** Margo, Round Legs **Total Quantity:** 18

Item: 2-Person Computer Table **MFG:** Nevins

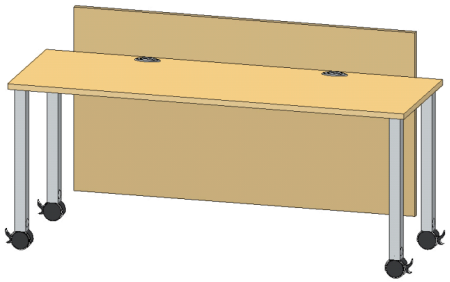

Dimensions:
72"w x 24"d x 29"h;
Modesty panel/ screen: 66"w x 28"h.

Description:
Rectangle Table w/ modesty panel;
Install modesty panel/ screen so that 8" is above worksurface;
Round Post Legs w/ 2"dia Locking casters;
Plastic laminate with 3mm PVC edge LP01;
Include (2) Grommets per table.

Finish:
Laminate: 7909-60 Wilsonart Fusion Maple;
Edge: Fusion Maple;
Base:BC.03 Satin Chrome;
Grommet: Satin Aluminum;.

Options:
Include Multi Wire Channel horizontal wire manager under table - install in field per direction from City IT Director;
Include Wire Management Clips, translucent - 2 sets per table.

Addenda Notes:

Room #	Room Name	Qnty
A123	Computers	18

Room #	Room Name	Qnty

Meriden Public Library Renovations

Meriden, CT

FF&E Item Data Sheets

Item Code: T.13 **Category:** NEV **Model:** Skipper **Total Quantity:** 3

Item: Round Table **MFG:** Nevins

Dimensions: 36"dia x 29"h

Description: Rectangular table top, plastic laminate with 3mm PVC edge LP01,
Metal "X" leg base, w/ Locking casters.

Finish: Top: Plastic Laminate: 7909-60 Wilsonart Fusion Maple;
Edge: Fusion Maple;
Base: Powdercoated - BC03 Satin Chrome.

Options:

Addenda Notes:

Room #	Room Name	Qnty
A122	Reading Area	3

Room #	Room Name	Qnty

Meriden Public Library Renovations

Meriden, CT

FF&E Item Data Sheets

Item Code: **T.14** **Category:** NEV **Model:** Skipper **Total Quantity:** 13

Item: Multi-purpose Nesting Table **MFG:** Nevins

Dimensions: 60"w x 20"d x 29"h

Description: Rectangle Table; Flipping & Nesting T-base w/ locking casters.
Plastic laminate with 3mm PVC edge LP01.

Finish: Laminate: 7909-60 Wilsonart Fusion Maple;
Edge: Fusion Maple;
Base:BC.03 Satin Chrome.

Options:

Addenda Notes:

Room #	Room Name	Qnty
A104	Control Rm	1

Room #	Room Name	Qnty
A107	Storage	12

Meriden Public Library Renovations

Meriden, CT

FF&E Item Data Sheets

Item Code: **T.19** **Category:** NEV **Model:** Margo, Round Legs **Total Quantity:** 1

Item: Scanner Table **MFG:** Nevins

Dimensions: 36"w x 24"d x 29"h

Description: Rectangle Table;
Round Post Legs;
Plastic laminate with 3mm PVC edge LP01;
Include (1) center Grommet.

Finish: Laminate: 7909-60 Wilsonart Fusion Maple;
Edge: Fusion Maple;
Base:BC.03 Satin Chrome;
Grommet: Satin Aluminum;.

Options:

Addenda Notes:

Room #	Room Name	Qnty
A123	Computers	1

Room #	Room Name	Qnty

Meriden Public Library Renovations

Meriden, CT

FF&E Item Data Sheets

Item Code: **OP.01** **Category:** OPAC **Model:** Custom **Total Quantity:** 2

Item: OPAC Staion **MFG:** Hale

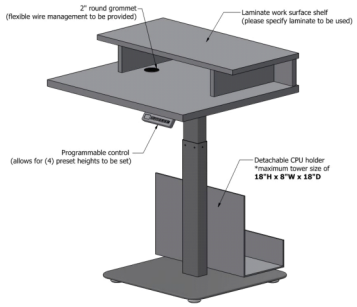

Dimensions: 27 1/2"" w x 24" d x 26" - 46" Ht Adj

Description: Custom Search Station-Stand, Ht Adjustable Metal leg w/ Programmable control that allows for (4) preset heights to be set;
Laminate Work Surface w/ upper shelf ; PVC edges;
Flat square metal base; Detachable CPU holder;
Mfr's Reference Quote #22104120.

Finish: P.Lam: Wilsonart Fusion Maple, 7909-60;
PVC Edge: To match p.lam;
Base: Silver.

Options: 2" round grommet toward left of work surface with flexible wire management.

Addenda Notes:

Room #	Room Name	Qnty
A123	Computers	2

Room #	Room Name	Qnty

Meriden Public Library Renovations

Meriden, CT

FF&E Item Data Sheets

Item Code: **OP.02** **Category:** OPAC **Model:** Custom **Total Quantity:** 2

Item: OPAC Staion - ADA **MFG:** Hale

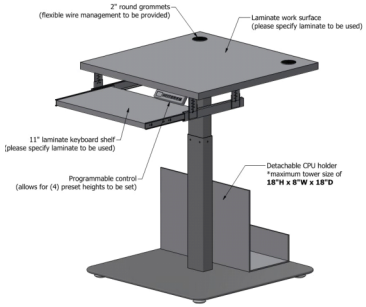

Dimensions: 27 1/2"" w x 24" d x 31 1/2"-51 1/2" Ht Adj

Description: Custom Search Station-Stand, Ht Adjustable Metal leg w/ Programmable control that allows for (4) preset heights to be set;
Laminate Work Surface w/ 11"d pull-out laminate keyboard shelf under worksurface; PVC edges;
Flat square metal base; Detachable CPU holder;
NOTE: According to current ADA Standards for Accessible Design, product shall comply to min.knee clerance of 30"w x 19"d x 27"h with max. worksurface height of 34".
Mfr's Reference Quote #22104120.

Finish: P.Lam: Wilsonart Fusion Maple, 7909-60;
PVC Edge: To match p.lam;
Base: Silver.

Options: 2" round grommet toward left and right corners of work surface with flexible wire management.

Addenda Notes:

Room #	Room Name	Qnty
102	Children's Section	1

Room #	Room Name	Qnty
A123	Computers	1

Meriden Public Library Renovations

Meriden, CT

FF&E Item Data Sheets

Item Code: **DI.01** **Category:** PALM **Model:** Euroform, Livelli Display **Total Quantity:** 1

Item: Display Tower - Adult **MFG:** Palmieri

Dimensions: 4"dia x modified height (Delete top tier)

Description: Laminate Display;
Mobile 3-tier diameter display with 42", 32" and 22" dia platforms;
W/ Concealed locking casters.

Finish: P.Lam: Fusion Maple 7909-60.

Options:

Addenda Notes:

Room #	Room Name	Qnty
A123	Computers	1

Room #	Room Name	Qnty

Meriden Public Library Renovations

Meriden, CT

FF&E Item Data Sheets

Item Code: **DI.02** **Category:** PALM **Model:** NuMedia, Baxter **Total Quantity:** 2

Item: Display Tower - Children's **MFG:** Palmieri

Dimensions: 24"w x 24"d x 44"h

Description: Display Mobile Shelving 3-Tier Compartments;
4-Sided, 3-tier with 12 open compartments and locking casters. Each open compartment is 14 3/4"w x 7 3/16"d x 12"h.
Laminate.

Finish: Exterior P.Lam: Wilsonart Fusion Maple 7909-60;
Interior P.Lam: Abet Laminati 482 SEI.

Options:

Addenda Notes:

Room #	Room Name	Qnty
102	Children's Section	2

Room #	Room Name	Qnty

Meriden Public Library Renovations

Meriden, CT

FF&E Item Data Sheets

Item Code: DI.03 **Category:** PALM **Model:** NuMedia, Baxter **Total Quantity:** 2

Item: Display Tower - Teen's **MFG:** Palmieri

Dimensions: 24"w x 24"d x 44"h

Description: Display Mobile Shelving 3-Tier Compartments;
4-Sided, 3-tier with 12 open compartments and locking casters. Each open compartment is 14 3/4"w x 7 3/16"d x 12"h.
Laminate.

Finish: Exterior and Interior P.Lam: Wilsonart Fusion Maple 7909-60;

Options:

Addenda Notes:

Room #	Room Name	Qnty
108	Teen Area	2

Room #	Room Name	Qnty

Meriden Public Library Renovations

Meriden, CT

FF&E Item Data Sheets

Item Code: **MB.01** **Category:** PALM **Model:** Sola **Total Quantity:** 5

Item: Curved Mobile shelving **MFG:** Palmieri

Dimensions: 64 1/4"w x 21"d x 37"h

Description: 60 Degree Curved double-faced moble unit with Wood Veneer , 3/4"th. construction, Acryilic edges; 8 adjustable shelves. Back panel powdercoated perforated metal; 6 swivel brake casters.

Finish: Wood Veneer: Natural Maple;
Metal: Zinc Yellow RAL 1018.

Options:

Addenda Notes:

Room #	Room Name	Qnty
102	Children's Section	5

Room #	Room Name	Qnty

Meriden Public Library Renovations

Meriden, CT

FF&E Item Data Sheets

Item Code: T.11 **Category:** PALM **Model:** Kreations, Rectangle **Total Quantity:** 4

Item: Computer Table @ Children's **MFG:** Palmieri

Dimensions: 24"d x 60"w x 25"h (Modified Height)

Description: Rectangle Top w/ Acrylic/PVC Edge band;
Top constructed of 1"thick top w/ a plastic laminate top surface
2" Metal Diameter M-D legs, electrostatically coated with epoxy powder coat paint.

Finish: P.Lam Top: Fusion Maple 7909-60;
Acrylic/PVC Edge: Hardrock Maple AC-WM791;
Metal Legs: Grey A16.

Options: One plastic grommet w/ horizontal wire management chanel.

Addenda Notes:

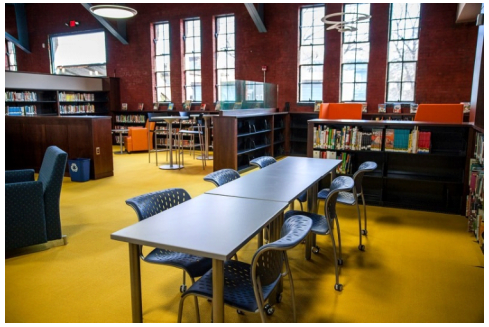

Room #	Room Name	Qnty
102	Children's Section	4

Room #	Room Name	Qnty

Meriden Public Library Renovations

Meriden, CT

FF&E Item Data Sheets

Item Code: T.12 **Category:** PALM **Model:** Kreations, Trio Link **Total Quantity:** 2

Item: AWE Table @ Children's **MFG:** Palmieri

Dimensions: 48"w x 48"d x 21"h (Modified Height)

Description: Rectangle Top w/ Acrylic/PVC Edge band;
Top constructed of 1"thick top w/ a plastic laminate top surface
2" Metal Diameter M-D legs, electrostatically coated with epoxy powder coat paint.

Finish: P.Lam Top: Fusion Maple 7909-60;
Acrylic/PVC Edge: Hardrock Maple AC-WM791;
Metal Legs: Grey A16.

Options: One center 3" plastic grommet;
Include Vertical Flex Wire Leg.

Addenda Notes:

Room #	Room Name	Qnty
102	Children's Section	2

Room #	Room Name	Qnty

Meriden Public Library Renovations

Meriden, CT

FF&E Item Data Sheets

Item Code: **BC.02** **Category:** TEK **Model:** Expansion Bookcase BSOB **Total Quantity:** 4

Item: Bookcase, 72"h, P.Lam **MFG:** Teknion

Dimensions: 36"w x 12"d x 72"h

Description: Bookcase w/ base + 4 adjustable 1" thick shelves + levelers;
Holes at 1 1/4" intervals on the inside of side panels allow for shelf adjustment;
The 12" deep Bookcase must be placed against and secured to a wall for stability.

Finish: Case Finish: Source Laminate Maple YM/XM.

Options:

Addenda Notes:

Room #	Room Name	Qnty
102A	Story Area	4

Room #	Room Name	Qnty

Meriden Public Library Renovations

Meriden, CT

FF&E Item Data Sheets

Item Code: C.08 **Category:** TEK **Model:** Routes Soft Seating CQSRC **Total Quantity:** 1

Item: Rocking Chair, With Arms **MFG:** Teknion

Dimensions: 33"w x 37 1/4"d x 16 1/2"s.h. x 24"a.h. x 46"o.h.

Description: Soft Seating - Rocker;
Tubular steel frame, Wood Arms and Rocker base.

Finish: Seat Upholstery: COM, Mayer Fabrics, Pattern: Optic, Color: Sunrise;
Metal Frame Finish: Clay (85);
Wood Arn Finish: Sisal VM.

Options:

Addenda Notes:

Room #	Room Name	Qnty
102A	Story Area	1

Room #	Room Name	Qnty

Meriden Public Library Renovations

Meriden, CT

FF&E Item Data Sheets

Item Code: F.01 **Category:** TEK **Model:** Ledger **Total Quantity:** 16

Item: Mobile Pedestal B/B/F for Offices **MFG:** Teknion

Dimensions: 15"w x 22"d x 28"h

Description: (3) locking drawers: (2) Box (1) file. Steel frame welded construction.
4 casters; Counterweight included for stability. Include 4 compartment pencil tray;
Full extension drawers to accommodate both letter and legal size paper;
Include hanging file bars to be installed along width;
Metal front;
Key alike per room at private offices. Key alike per user in shared spaces. .

Finish: Metal Color: Mica Paint 62/M Graphite.

Options:

Addenda Notes:

Room #	Room Name	Qnty
102	Children's Section	1
106	Staff	4
A110	Service Desk	5

Room #	Room Name	Qnty
103	Workroom	4
106B	Office	2

Meriden Public Library Renovations

Meriden, CT

FF&E Item Data Sheets

Item Code: **ST.01** **Category:** TEK **Model:** Expansion **Total Quantity:** 5

Item: Mobile Storage Cabinet, 36"w 6h **MFG:** Teknion

Dimensions: 36"w x 24"d x 72"h

Description: Mobile Storage Cabinet with full solid door including: (1) cabinet, (2) rectangular doors, (4) Adjustable shelves and (4) locking casters;
Locking doors, keyed alike;
P.Laminate Case;
Pulls: Standard.
Special Item Ref Dwg BSCD243672.

Finish: P.Lam: Maple YM/XM;
Edge: Choice Maple.

Options:

Addenda Notes:

Room #	Room Name	Qnty
102A	Story Area	5

Room #	Room Name	Qnty

Meriden Public Library Renovations

Meriden, CT

FF&E Item Data Sheets

Item Code: T.16 **Category:** TEK **Model:** Thesis Hub Table **Total Quantity:** 1

Item: Copier Table **MFG:** Teknion

Dimensions: 60"w x 24"d x 34"h

Description: Rectangular Table/Desk with 1-9/16" Top, High Presure Foundation Laminate, Base finished in Source Laminate, thermally fused melamine panels. 3mm PVC Straight edges. Full height end panels; back panel with Wall Access. 2 grommets (Left & Right) on Worksurface 2.5" round.
Leveling Glides

Finish: Plastic Laminate: Maple YM/XM;
Edge Trim: Choice Maple;
Grommets: Platnium satin.

Options:

Addenda Notes:

Room #	Room Name	Qnty
102	Children's Section	1

Room #	Room Name	Qnty

Meriden Public Library Renovations

Meriden, CT

FF&E Item Data Sheets

Item Code: **C.07** **Category:** TMC **Model:** Plover Stool **Total Quantity:** 8

Item: Child size Stool, 12"s.h. **MFG:** TMC

Dimensions: 16" overall dia; 14" dia seat x 12"h

Description: Stackable Stool; Stacks 5 High
Wood Seat: 1" Baltic Birch surfaced with Maple veneer w/ Exposed plywood edge;
Base: Molded 1" thick maple plywood legs w/ Nylon glides.

Finish: Wood: Natural Maple

Options:

Addenda Notes:

Room #	Room Name	Qnty
102A	Story Area	8

Room #	Room Name	Qnty

Meriden Public Library Renovations

Meriden, CT

FF&E Item Data Sheets

Item Code: **FW.01** **Category:** TMC **Model:** Family Workstation **Total Quantity:** 2

Item: Family Workstation **MFG:** TMC

Dimensions: 72"w x 45.5"d x 47.75"h
Work Surface 23.5"d x 29"h

Description: Single-Faced Unit;
3" Upholstered mat with PVC-free healthcare grade EPU - bleach cleanable and Greenguard certified;
Acrylic mirror and (1) Flat Style Learning Panel on each unit:
One Unit with "The Garden APC1616-GD01"
One Unit with "Neighborhood APC1616-NB0"
Grommet 3"dia in Black, wire chase and mouse hole for managing electrical;
Panel Material: .75" Baltic Birch with rotary cut maple veneer.
Worksurface: Laminate with Maple edge band.
Include latched gate.

Finish: Side Panel Finish: Clear 01;
Mid/Back Divider Finish: Clear 01;
Top Laminate Selection: Wilsonart Fusion Maple 7909;
Edge Color: Clear 01;
Fabric Selection Momentum Everywhere EPU, Sina Pearson, Alert 27.

Options:

Addenda Notes:

Room #	Room Name	Qnty
A123	Computers	2

Room #	Room Name	Qnty

Meriden Public Library Renovations

Meriden, CT

FF&E Item Data Sheets

Item Code: L.04 **Category:** TMC **Model:** Lake Lounge - Large **Total Quantity:** 1

Item: Teen Lounge w/Back **MFG:** TMC Furniture, Inc

Dimensions: 78½"w x 35½"d x 27"h, 17"s,h,
(backrest dimensions W 27¾" D 16" H 10")

Description: Lounge Seating;
Frame: Plywood frame with highly resilient compound foam construction covered with upholstery.
Base: Black powder coated 1" MDF and bolted to seat.
Split Fabrics.

Finish: Upholstery fpr Seat: CF Stinson, Pattern: Kennebunk, Color: Summer 64318, Include Alta stain resistant finish; Upholstery for Backrest: Pallas Textiles, Pattern: Freize, Color: Westbeth 27.270.123, HP Ease finish and Acrylic Backing.

Options:

Addenda Notes:

Room #	Room Name	Qnty
108	Teen Area	1

Room #	Room Name	Qnty

Meriden Public Library Renovations

Meriden, CT

FF&E Item Data Sheets

Item Code: **T.15** **Category:** TMC **Model:** Plover Table **Total Quantity:** 2

Item: Child Height Table **MFG:** TMC

Dimensions: 36" dia x 20"h

Description: Laminate top Stackable Table;
Edge Style: #20 Maple Edgeband 0.125";
Wood Legs w/ glides, include bumpers for stacking.

Finish: Top: Maple;
Edge: Maple

Options:

Addenda Notes:

Room #	Room Name	Qnty
102A	Story Area	2

Room #	Room Name	Qnty

Meriden Public Library Renovations

Meriden, CT

FF&E Item Data Sheets

Item Code: **BT.02** **Category:** WD **Model:** Modified Descending Book Truck **Total Quantity:** 2

Item: Depressible Book Truck **MFG:** Worden

Dimensions: 27"w (custom) x 25"d x 32"h

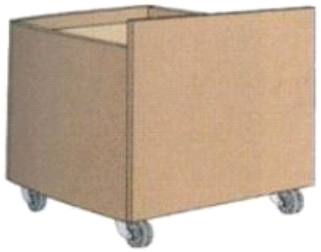

Description: All Maple wood book truck with steel reinforced rubber bumpers on all four vertical corners;
Modified to specified size;
Include handle on taller panel to allow for ease of movement;
Ends, bottom, front and back of the book truck are constructed of 3-ply panels, 3/4"th;
Platform will descend as books are added and raise as books are taken out; Include Cushioned platform from above depressible spring;
W/ four swivel twin wheel, heavy-duty casters, 4" diameter.

Finish: Finish: Natural Maple.

Options:

Addenda Notes:

Room #	Room Name	Qnty
A110	Service Desk	2

Room #	Room Name	Qnty

Meriden Public Library Renovations

Meriden, CT

FF&E Item Data Sheets

Item Code: **MB.02** **Category:** WD **Model:** Custom **Total Quantity:** 12

Item: Book Browser Bins - Custom **MFG:** Worden

Dimensions: 74 1/2"l x 34 1/2"d x 25"h

Description: Custom size picture book cart;
Double-Sided with 10 total top-accessible cubbies, divided evenly in (2) rows of (5) openings;
Bottom of browser to have 13"h cubby for book storage (spine view)
Solid Maple Edges and maple veneers;
W/ locking, heavy-duty casters.

Finish: Natrual Maple.

Options:

Addenda Notes:

Room #	Room Name	Qnty
102	Children's Section	12

Room #	Room Name	Qnty

Meriden Public Library Renovations

Meriden, CT

FF&E Item Data Sheets

Item Code: **WC.01** **Category:** WF **Model:** GF07 Clear PET Glass Film **Total Quantity:** 1

Item: Window Film **MFG:** Designtex

Dimensions: V.I.F. - Daylight Opening Size 1: 40 5/16"w x 50"h - Qty (8)
- Daylight Opening Size 2: 36"w x 50"h - Qty (3)

Description: Film to be installed on outer side of Story Room Storefront Glass, middle row only. Glass Type is 1/4" Clear, tempered.
Vendor must verify dimensions in field and coordinate with GC.
Film Description: Optically clear, self-adhesive polyester film for application to glass. Contents: 100% PET with Acrylic-based adhesive;
Cleaning: Water-based (W)Wipe with a clean, damp, soft cloth and mild detergent;
Weight: 8 oz/linear yard, 3 mil thickness; Width 61 inches (59" max printable); Flammability: ASTM E84 Class A;
Installation: Wet Application: Refer to Designtex guide Digital Windows - Clear Film Installation Instructions;
First Surface installation.
Designtex Ref #050179; Contact: Grace Scale gscale@designtex.com, Ellen Harriman eharrima@designtex.com.

Finish: Pattern: Beguiled by the Wild;
Color: White Ink on Clear Film.

Options:

Addenda Notes:

Room #	Room Name	Qnty
102A	Story Area	1

Room #	Room Name	Qnty

Meriden Public Library Renovations

Meriden, CT

FF&E Item Data Sheets

Item Code: **CP.01** **Category:** XEP **Model:** Canopy Tops **Total Quantity:** 16

Item: Canopy Top for (4) 36"w units **MFG:** Hale

Dimensions: Approx. 12'-3"l x 1'-9 1/4"d x 1"th.

Description: P.Lam w/ 3/4" x 1" wood edges on two long sides only.
Installed within end panels.
See SKF.01, SKF.02 and SKF.03 for details on end panels and signage;
Include all necessary hardware for proper installation.
Canopy Tops and End Panels are to be installed on existing shelving; furniture vendor must field verify dimensions and other existing conditions priror to finalizing and ordering.

Finish: Wood: Natural Maple;
P.Lam: Wilsonart Fusion Maple, 7909-60.

Options:

Addenda Notes:

Room #	Room Name	Qnty
102	Children's Section	1
107	Ref Area	4

Room #	Room Name	Qnty
102E	Children's Stacks	11

Meriden Public Library Renovations

Meriden, CT

FF&E Item Data Sheets

Item Code: **CP.02** **Category:** XEP **Model:** Canopy Tops **Total Quantity:** 5

Item: Canopy Top for (3) 36"w units **MFG:** Hale

Dimensions: Approx. 9'-3"l x 1'-9 1/4"d x 1"th.

Description: P.Lam w/ 3/4" x 1" wood edges on two long sides only.
Installed within end panels.
See SKF.01, SKF.02 and SKF.03 for details on end panels and signage;
Include all necessary hardware for proper installation.
Canopy Tops and End Panels are to be installed on existing shelving; furniture vendor must field verify dimensions and other existing conditions priror to finalizing and ordering.

Finish: Wood: Natural Maple;
P.Lam: Wilsonart Fusion Maple, 7909-60.

Options:

Addenda Notes:

Room #	Room Name	Qnty
107A	Reference Stacks	5

Room #	Room Name	Qnty

Meriden Public Library Renovations

Meriden, CT

FF&E Item Data Sheets

Item Code: **CP.03** **Category:** XEP **Model:** Canopy Tops **Total Quantity:** 13

Item: Canopy Top for (5) 36"w units **MFG:** Hale

Dimensions: Approx. 15'-3"l x 1'-9 1/4"d x 1"th.

Description: P.Lam w/ 3/4" x 1" wood edges on two long sides only.
Installed within end panels.
See SKF.01, SKF.02 and SKF.03 for details on end panels and signage;
Include all necessary hardware for proper installation.
Canopy Tops and End Panels are to be installed on existing shelving; furniture vendor must field verify dimensions and other existing conditions priror to finalizing and ordering.

Finish: Wood: Natural Maple;
P.Lam: Wilsonart Fusion Maple, 7909-60.

Options:

Addenda Notes:

Room #	Room Name	Qnty
121	Stacks	13

Room #	Room Name	Qnty

Meriden Public Library Renovations

Meriden, CT

FF&E Item Data Sheets

Item Code: **CP.04** **Category:** XEP **Model:** Canopy Tops **Total Quantity:** 2

Item: Canopy Top for (7) 36"w units **MFG:** Hale

Dimensions: Approx. 21'-3"l x 1'-9 1/4"d x 1"th.

Description: P.Lam w/ 3/4" x 1" wood edges on two long sides only.
Installed within end panels.
See SKF.01, SKF.02 and SKF.03 for details on end panels and signage;
Include all necessary hardware for proper installation.
Canopy Tops and End Panels are to be installed on existing shelving; furniture vendor must field verify dimensions and other condiiotns priror to finalizing and ordering.

Finish: Wood: Natural Maple;
P.Lam: Wilsonart Fusion Maple, 7909-60.

Options:

Addenda Notes:

Room #	Room Name	Qnty
121	Stacks	2

Room #	Room Name	Qnty

Meriden Public Library Renovations

Meriden, CT

FF&E Item Data Sheets

Item Code: **CP.06** **Category:** XEP **Model:** Canopy Tops **Total Quantity:** 2

Item: Canopy Top for (3) 36"w and (1) 24" {or (4) 32"w} **MFG:** Hale

Dimensions: Approx. 11'-0"l x 1'-0"d x 1"th.

Description: P.Lam w/ 3/4" x 1" wood edge on two long sides only.
Installed within end panels.
See SKF.01, SKF.02 and SKF.03 for more details.
Include all necessary hardware for proper installation.
End Panels are to be installed on existing shelving; furniture vendor must field verify dimensions and other existing conditions priror to finalizing and ordering.

Finish: Wood: Natural Maple;
P.Lam: Wilsonart Fusion Maple, 7909-60.

Options:

Addenda Notes:

Room #	Room Name	Qnty
102	Children's Section	1

Room #	Room Name	Qnty
102E	Children's Stacks	1

Meriden Public Library Renovations

Meriden, CT

FF&E Item Data Sheets

Item Code: **CP.07** **Category:** XEP **Model:** Canopy Tops **Total Quantity:** 1

Item: Canopy Top for (3) 36"w units **MFG:** Hale

Dimensions: Approx. 9'-0"l x 1'-0"d x 1"th.

Description: P.Lam w/ 3/4" x 1" wood edge on two long sides only.
Installed within end panels.
See SKF.01, SKF.02 and SKF.03 for more details.
Include all necessary hardware for proper installation.
End Panels are to be installed on existing shelving; furniture vendor must field verify dimensions and other existing conditions priror to finalizing and ordering.

Finish: Wood: Natural Maple;
P.Lam: Wilsonart Fusion Maple, 7909-60.

Options:

Addenda Notes:

Room #	Room Name	Qnty
102	Children's Section	1

Room #	Room Name	Qnty

Meriden Public Library Renovations

Meriden, CT

FF&E Item Data Sheets

Item Code: **CP.08** **Category:** XEP **Model:** Canopy Tops **Total Quantity:** 1

Item: Canopy Top for (5) 36"w and (2) 32"w units **MFG:** Hale

Dimensions: Approx. 20'-4"l x 1'-0"d x 1"th.

Description: P.Lam w/ 3/4" x 1" wood edge on two long sides only.
Installed within end panels.
See SKF.01, SKF.02 and SKF.03 for more details.
End Panels are to be installed on existing shelving; furniture vendor must field verify dimensions and other existing conditions priror to finalizing and ordering.

Finish: Wood: Natural Maple;
P.Lam: Wilsonart Fusion Maple, 7909-60.

Options:

Addenda Notes:

Room #	Room Name	Qnty
102	Children's Section	1

Room #	Room Name	Qnty

Meriden Public Library Renovations

Meriden, CT

FF&E Item Data Sheets

Item Code: **EP.01** **Category:** XEP **Model:** End Panels **Total Quantity:** 14

Item: Single-face End Panel - 84h **MFG:** Hale

Dimensions: 12 1/8"w x 2 1/4"d x 84"h

Description: 84"h Single face wood end Panel with P.Lam insert.
See SKF.01, SKF.02 and SKF.03 for more details.
End Panels are to be installed on existing shelving; furniture vendor must field verify dimensions and other existing conditions priror to finalizing and ordering.

Finish: Wood: Natural Maple;
P.Lam: Wilsonart Fusion Maple, 7909-60.

Options:

Addenda Notes:

Room #	Room Name	Qnty
108	Teen Area	2
113	Meeting Room	1
A122	Reading Area	2

Room #	Room Name	Qnty
112	Holocaust	6
121	Stacks	3

Meriden Public Library Renovations

Meriden, CT

FF&E Item Data Sheets

Item Code: **EP.02** **Category:** XEP **Model:** End Panels **Total Quantity:** 38

Item: Double-face End Panel - 84h **MFG:** Hale

Dimensions: 21 1/4"w x 2 1/4"d x 84"h

Description: 84"h Double face wood end Panel with P.Lam insert.
See SKF.01, SKF.02 and SKF.03 for more details.
End Panels are to be installed on existing shelving; furniture vendor must field verify dimensions and other existing conditions priror to finalizing and ordering.

Finish: Wood: Natural Maple;
P.Lam: Wilsonart Fusion Maple, 7909-60.

Options:

Addenda Notes:

Room #	Room Name	Qnty
121	Stacks	38

Room #	Room Name	Qnty

Meriden Public Library Renovations

Meriden, CT

FF&E Item Data Sheets

Item Code: **EP.03** **Category:** XEP **Model:** End Panels **Total Quantity:** 18

Item: Double-face End Panel - 60h **MFG:** Hale

Dimensions: 21 1/4"w x 2 1/4"d x 60"h

Description: 60"h Double face wood end Panel with P.Lam insert.
See SKF.01, SKF.02 and SKF.03 for more details.
End Panels are to be installed on existing shelving; furniture vendor must field verify dimensions and other existing conditions priror to finalizing and ordering.

Finish: Wood: Natural Maple;
P.Lam: Wilsonart Fusion Maple, 7909-60.

Options:

Addenda Notes:

Room #	Room Name	Qnty
107	Ref Area	8

Room #	Room Name	Qnty
107A	Reference Stacks	10

Meriden Public Library Renovations

Meriden, CT

FF&E Item Data Sheets

Item Code: **EP.04** **Category:** XEP **Model:** End Panels **Total Quantity:** 30

Item: Double-face End Panel - 48h **MFG:** Hale

Dimensions: 21 1/4"w x 2 1/4"d x 48"h

Description: 48"h Double face wood end Panel with P.Lam insert.
See SKF.01, SKF.02 and SKF.03 for more details.
End Panels are to be installed on existing shelving; furniture vendor must field verify dimensions and other existing conditrions priror to finalizing and ordering.

Finish: Wood: Natural Maple;
P.Lam: Wilsonart Fusion Maple, 7909-60.

Options:

Addenda Notes:

Room #	Room Name	Qnty
121	Stacks	30

Room #	Room Name	Qnty

Meriden Public Library Renovations

Meriden, CT

FF&E Item Data Sheets

Item Code: **EP.05** **Category:** XEP **Model:** End Panels **Total Quantity:** 6

Item: Double-face End Panel - 60h - Yellow **MFG:** Hale

Dimensions: 21 1/4"w x 2 1/4"d x 60"h

Description: 60"h Double face wood end Panel with P.Lam insert.
See SKF.01, SKF.02 and SKF.03 for more details.
End Panels are to be installed on existing shelving; furniture vendor must field verify dimensions and other existing conditions priror to finalizing and ordering.

Finish: Wood: Natural Maple;
P.Lam: Abet Laminati 463 SEI.

Options:

Addenda Notes:

Room #	Room Name	Qnty
102E	Children's Stacks	6

Room #	Room Name	Qnty

Meriden Public Library Renovations

Meriden, CT

FF&E Item Data Sheets

Item Code: **EP.06** **Category:** XEP **Model:** End Panels **Total Quantity:** 8

Item: Double-face End Panel - 60h - Orange **MFG:** Hale

Dimensions: 21 1/4"w x 2 1/4"d x 60"h

Description: 60"h Double face wood end Panel with P.Lam insert.
See SKF.01, SKF.02 and SKF.03 for more details.
End Panels are to be installed on existing shelving; furniture vendor must field verify dimensions and other existing conditions priror to finalizing and ordering.

Finish: Wood: Natural Maple;
P.Lam: Wilsonart, Tangerine 4915-60.

Options:

Addenda Notes:

Room #	Room Name	Qnty
102E	Children's Stacks	8

Room #	Room Name	Qnty

Meriden Public Library Renovations

Meriden, CT

FF&E Item Data Sheets

Item Code: **EP.07** **Category:** XEP **Model:** End Panels **Total Quantity:** 10

Item: Double-face End Panel - 60h - Blue **MFG:** Hale

Dimensions: 21 1/4"w x 2 1/4"d x 60"h

Description: 60"h Double face wood end Panel with P.Lam insert.
See SKF.01, SKF.02 and SKF.03 for more details.
End Panels are to be installed on existing shelving; furniture vendor must field verify dimensions and other existing conditions priror to finalizing and ordering.

Finish: Wood: Natural Maple;
P.Lam: Abet Laminati 482 SEI.

Options:

Addenda Notes:

Room #	Room Name	Qnty
102	Children's Section	2

Room #	Room Name	Qnty
102E	Children's Stacks	8

Meriden Public Library Renovations

Meriden, CT

FF&E Item Data Sheets

Item Code: **EP.08** **Category:** XEP **Model:** End Panels **Total Quantity:** 3

Item: Single-face End Panel - 60h - Yellow **MFG:** Hale

Dimensions: 12 1/8"w x 2 1/4"d x 60"h

Description: 60"h Single face wood end Panel with P.Lam insert.
See SKF.01, SKF.02 and SKF.03 for more details.
End Panels are to be installed on existing shelving; furniture vendor must field verify dimensions and other existing conditions priror to finalizing and ordering.

Finish: Wood: Natural Maple;
P.Lam: Abet Laminati 463 SEI.

Options:

Addenda Notes:

Room #	Room Name	Qnty
102	Children's Section	1

Room #	Room Name	Qnty
102E	Children's Stacks	2

Meriden Public Library Renovations

Meriden, CT

FF&E Item Data Sheets

Item Code: **EP.09** **Category:** XEP **Model:** End Panels **Total Quantity:** 1

Item: Single-face End Panel - 84h Periodicals **MFG:** Hale

Dimensions: 18"w x 2 1/4"d x 84"h

Description: 84"h Single face wood end Panel with P.Lam insert.
See SKF.01, SKF.02 and SKF.03 for more details.
End Panels are to be installed on existing shelving; furniture vendor must field verify dimensions and other existing conditions priror to finalizing and ordering.

Finish: Wood: Natural Maple;
P.Lam: Wilsonart Fusion Maple, 7909-60.

Options:

Addenda Notes:

Room #	Room Name	Qnty
111	Periodicals	1

Room #	Room Name	Qnty

Meriden Public Library Renovations

Meriden, CT

FF&E Item Data Sheets

Item Code: **S.01** **Category:** XEP **Model:** **Total Quantity:** 11

Item: Signage for Single-Sided Shelving **MFG:** Hale

Dimensions: 7"w X 6 1/4"d

Description: Acrylic Signage with maple veneer insert for Single Sided Shelving;
Fastened to End Panels specified in this section or on wall or column as indicated on furniture plans.
NOTE: Must Coordinate installation heights with Architect.
See SKF.01, SKF.02 and SKF.03 for more details.

Finish: Clear Acrylic;
Insert: Natrual Maple Veneer;
Fastener: Brushes SSTL.

Options:

Addenda Notes:

Room #	Room Name	Qnty
102	Children's Section	2
108	Teen Area	2
121	Stacks	2

Room #	Room Name	Qnty
102E	Children's Stacks	2
111	Periodicals	1
A122	Reading Area	2

Meriden Public Library Renovations

Meriden, CT

FF&E Item Data Sheets

Item Code: **S.02** **Category:** XEP **Model:** **Total Quantity:** 55

Item: Signage for Double-Face Shelving **MFG:** Hale

Dimensions: 14"w X 6 1/4"d

Description: Acrylic Signage with maple veneer insert for Double Sided Shelving;
Fastened to End Panels specified in this section or on wall as indicated in furniture plans.
NOTE: Must Coordinate installation heights with Architect.
See SKF.01, SKF.02 and SKF.03 for more details.

Finish: Clear Acrylic;
Insert: Natrual Maple Veneer;
Fastener: Brushes SSTL.

Options:

Addenda Notes:

Room #	Room Name	Qnty
102	Children's Section	1
107	Ref Area	4
121	Stacks	34

Room #	Room Name	Qnty
102E	Children's Stacks	11
107A	Reference Stacks	5

Meriden Public Library Renovations

Meriden, CT

FF&E Item Data Sheets

Item Code: **SH.01** **Category:** XEP **Model:** Fixed Divider Browser Rack **Total Quantity:** 40

Item: CD Shelves **MFG:** Estey

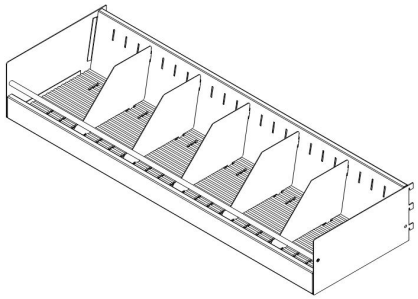

Dimensions: 35 1/2"w x 11"d x 5 1/2"h

Description: Browser Shelf; Each unit is made up of an #18-gauge body and two side brackets made from #16-gauge steel which are attached to it by means of spot-welding. Incorporated in each bracket are hooks to allow the unit to engage in the slots of the upright. Each unit contains a rubber pad to keep items from sliding and five plate dividers to keep items from falling over.
NOTE: Shelves to be installed within existing uprights. Vendor must verify existing conditions prior to ordering and installing shelves. Vendor to provide all hardware necessary for installation.

Finish: Metal Color: TBD.

Options:

Addenda Notes:

Room #	Room Name	Qnty
121	Stacks	40

Room #	Room Name	Qnty