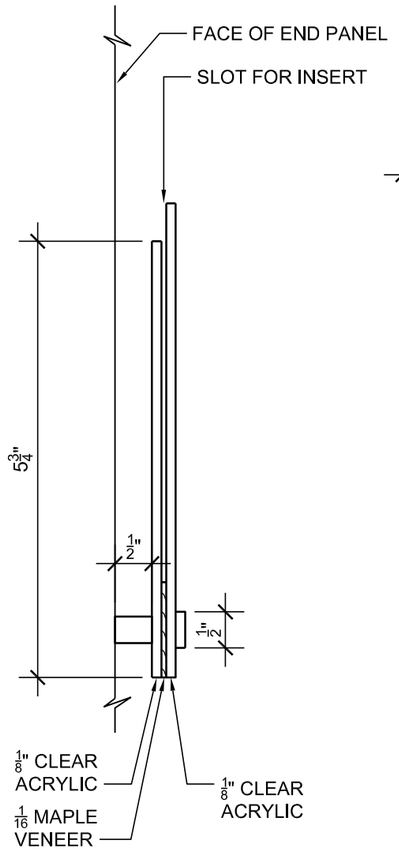

1 SIGNAGE SECTION
6"= 1' - 0"

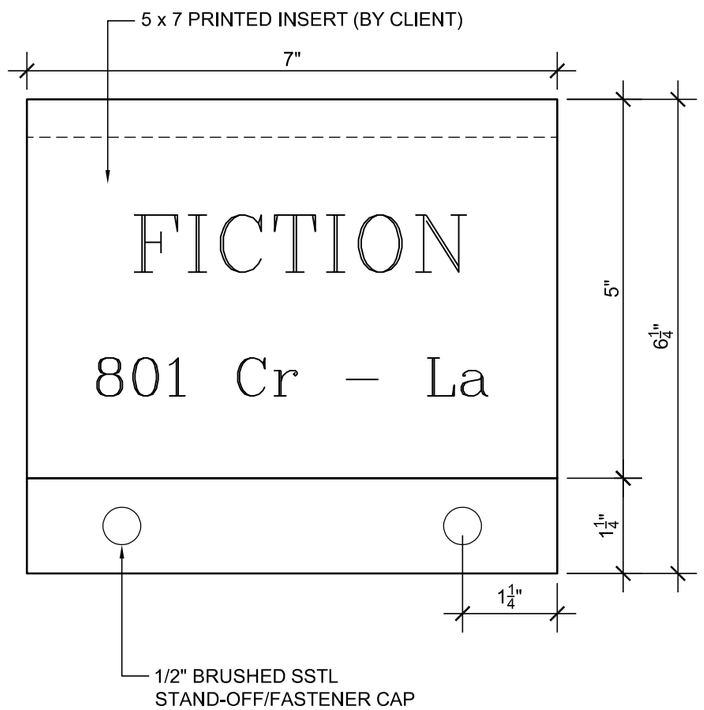

2 S.01 SIGNAGE FOR SINGLE-FACED END PANELS
6"= 1' - 0"

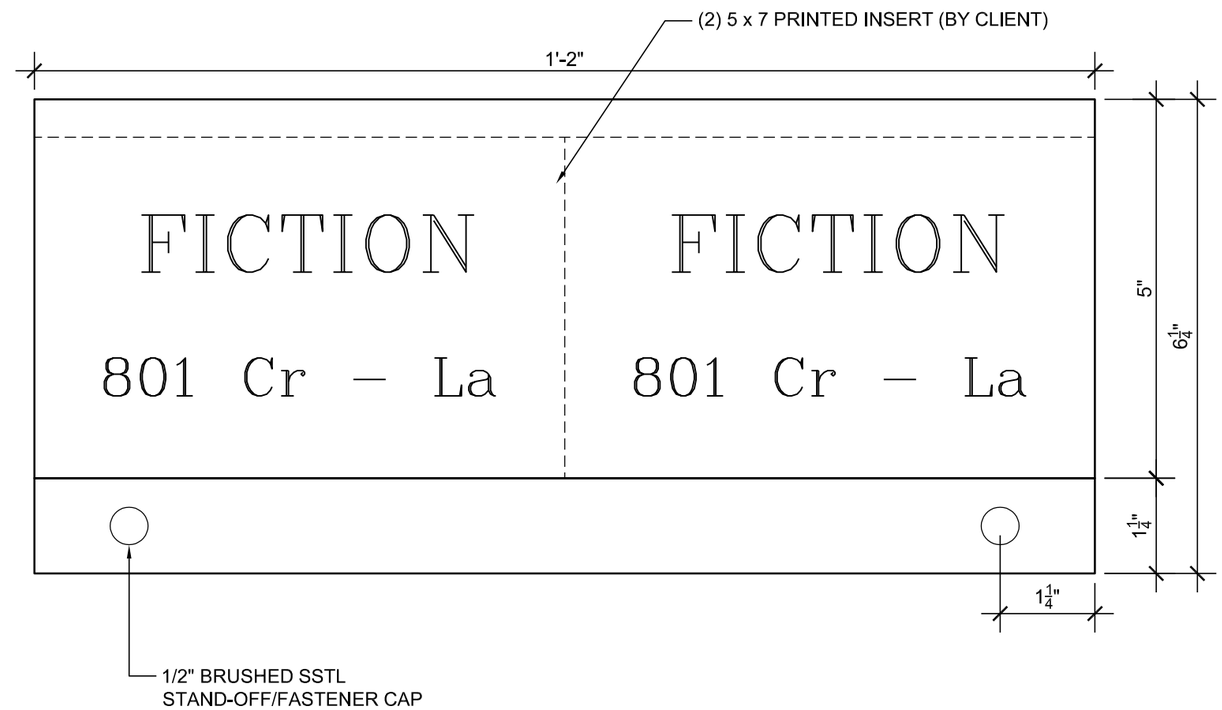

3 S.02 SIGNAGE FOR DOUBLE-FACED END PANELS
6"= 1' - 0"

NOTES:

1" THICK END PANELS (TYP.)

SELECT MAPLE HARDWOOD EDGE.

FABRICATOR TO FOLLOW CURRENT AWI BEST PRACTICES.

CANOPY TOPS TO MATCH WIDTH OF END PANELS.

SIGNAGE SHALL BE SQUARE & LEVEL.

1/16" RADIUS EASE AT ALL EDGES.

TSKP STUDIO
One Hartford Square West
146 Wyllys Street, Bldg 1-203
Hartford, CT 06106 • 860.547.1970

JOB NAME/NUMBER		TITLE	DRAWING NO.
MERIDEN PUBLIC LIBRARY, MERIDEN, CT		LIBRARY SHELVING SIGNAGE DETAILS	SKF-03
STATE JOB NO: B023-21	SCALE: AS NOTED		
DATE: 10/21/2022	DRAWN BY: AP		