City of Meriden, Connecticut

Purchasing Department

Invitation to Bid

Harbor Brook Bridge Replacement and Utility Improvements

Meriden, CT

B024-48

Bids Due: May 23, 2024 @ 11:00 A.M.

Purchasing Department

142 East Main Street, Room 210

Meriden, CT 06450

(203) 630-4115

LEGAL NOTICE

INVITATION TO BID

The City of Meriden is accepting sealed bids for:

B024-48 Harbor Brook Bridge Replacements and Utility Improvements, Butler and Hanover Streets

The City of Meriden, Department of Public Works/Engineering seeks the services of a contractor to furnish labor and materials to provide Harbor Brook Bridge Replacements and Utility Improvements, Butler and Hanover Streets.

Bids shall be submitted on forms and in the manner specified. Forms and specifications may be obtained from the Purchasing Department, on the City of Meriden website (www.meridenct.gov/business/bids-rfps/), and on the State of Connecticut Department of Administrative Services website (https://webprocure.proactiscloud.com) Bids will be accepted at the Purchasing Department, 142 East Main Street, Room 210, Meriden, Connecticut 06450 until **11:00 A.M. local, Eastern Standard Time on May 23, 2024** at which time they will be publicly opened and read. Any bid received after the time and date specified shall not be considered.

A non-mandatory Pre-Bid Meeting will be held on April 24, 2024 at 10:00 AM at the Engineering Conference Room in Meriden City Hall.

Each bid shall be accompanied by a Certified Check or Bid Bond in the amount of Ten (10%) percent of the amount bid.

The right is reserved to reject any or all bids, in whole or in part, to award any item, group of items, or total bid, and to waive informality or technical defects, if it is deemed to be in the best interest of the City of Meriden. No bidder may withdraw its bid within ninety (90) days of the date of the bid opening.

Labor and Material Payment Bond and a Performance Bond for One Hundred Percent (100%) of the contract price, with a corporate surety approved by the City of Meriden, will be required of the lowest responsible bidder.

The attention of bidders is directed to the requirement for minimum wage rates to be paid under this contract.

This contract is subject to state set-aside and contract compliance requirements.

The City of Meriden is an Affirmative Action/Equal Opportunity Employer. Disadvantaged, minority, small, and women business enterprises are encouraged to respond.

Rawle Dummett
Purchasing Officer
City of Meriden, CT 06450-8022
Dated: April 11, 2024

CITY OF MERIDEN, CONNECTICUT

B024-48 Harbor Brook Bridge Replacements and Utility Improvements, Butler and Hanover Streets

INFORMATION TO BIDDERS

1. BIDDING PROCEDURES

   Sealed Bids shall be submitted on the forms designated by the attached proposal bid forms. Bids will be received by the City of Meriden's Purchasing Department, Room 210, City Hall, 142 East Main Street, Meriden, Connecticut, 06450-8022 until 11:00 a.m. on May 23, 2024 and thereafter immediately read in public (the "bid opening").

   A non-mandatory Pre-Bid Meeting will be held on April, 24, 2024 at 10:00 AM at the Engineering Conference Room in Meriden City Hall.

2. BIDS

   Bids are to be submitted on the attached proposal forms. Please submit two copies of the proposal forms and Bidder's Qualification Statement. One shall be an original and one can be a copy. **Please submit one additional copy of the bid on a flash drive.**

   BID WILL BE AUTOMATICALLY REJECTED FOR ANYONE SUBMITTING A SURETY OTHER THAN THOSE SPECIFIED.

   a. Bids must be made out and signed in the corporate, or other, name of Bidder, and must be fully and properly executed by an authorized person.
   b. The sealed envelope must denote the Bidder's name and address in the upper left hand corner and the words "BID DOCUMENT – Harbor Brook Bridge Replacements and Utility Improvements, Butler and Hanover Streets to be opened at 11:00 a.m." in the lower left hand corner.
   c. Bids received later than the time and date specified will not be considered.
   d. Amendments to or withdrawal of bids received later than the date and time set forth in the bid opening will not be considered.
   e. All prices must be in ink or typewritten. In the event of a bidder's mathematical error in tabulating any bid prices, ***the written unit prices shall govern***.

3. BIDDER QUALIFICATIONS

   Bidders will be required to fill out, and include as part of its bid, any attached Bidder's Qualification Statement.

   In determining the qualifications of a bidder, the City of Meriden will consider the bidder's record of performance in any prior contracts for construction work. The City of Meriden expressly reserves the right to reject a bid if the bidder's historical performance, in the sole

opinion of the City of Meriden, has been unsatisfactory in any manner or if the bidder has habitually and without just cause neglected the payment of bills or has otherwise disregarded its obligations to subcontractors, suppliers, or employees.

4. EXAMINATION OF BIDDING DOCUMENTS

Bidders are to examine all documents and visit the site in order to make a thorough examination of the conditions so that the bidder may familiarize itself with all of the existing requirements, conditions, and difficulties that will affect the execution of the work in order to determine the amount of work necessary to carry out the true intent of the specifications and work shown on the drawings.

The City of Meriden and its agents do not have any responsibility for the accuracy, completeness, or sufficiency of any bid document obtained from any other source other than from the City of Meriden. Obtaining documents from any other source(s) may result in obtaining incomplete and inaccurate information. Obtaining documents from any other source may also result in failure to receive any addenda, corrections, or other revisions to the documents that may be issued.

No request shall be honored if such request is made less than seven (7) calendar days prior to the date fixed for the opening of bids. Any and all such interpretations, and any supplementary instructions, will be in the form of a written addenda to the specifications which, if issued, will be made available on the City of Meriden website (www.meridenct.gov) unless it is to change the date fixed for the opening of bids, not later than three (3) days prior to the date fixed for the opening of bids. Bidders are encouraged to check the website regularly for addenda. Failure of any bidder to receive any such addenda shall not relieve any bidder from any obligations under its bid as submitted.

Any questions about the bid document must be submitted in writing via email to meridenpurchasing@meridenct.gov. Any other format of question will not be answered.

5. BIDS TO REMAIN OPEN

No bidder may withdraw its bid within ninety (90) days of the date of the bid opening. Should there be reason why the contract cannot be awarded within the specified period, the time may be extended by mutual agreement between the City of Meriden and the successful bidder.

6. AWARD OF CONTRACT

The Purchasing Officer reserves the right to make an award on the bid which, by the Purchasing Officer's judgment and recommendation from the City of Meriden Department

of Public Works/Engineering following bid evaluations, best meets the specifications and is deemed to be in the best interest of the City of Meriden.

The contract will not be awarded to any corporation, firm, or individual which/who is in arrears to the City of Meriden by debt or contract, or who is in default as security or otherwise by any obligation to the City of Meriden.

The right is reserved to reject any or all bids, in whole or in part, to award any item, group of items, or total bid, and to waive informality or technical defects, if it is deemed to be in the best interest of the City of Meriden.

7. BID PROTEST PROCEDURE

In the event that any bidder wishes to protest the potential award of a bid, or any procedure of act in the advertising or soliciting of the bids, said bidder must make said protest in writing, which shall state the reason therefore and request a conference with respect thereto. Said protest must be received in the City Purchasing Office within **FIVE (5)** business days after the delivery of bid results or decisions. A conference with respect to said protest shall be scheduled by the Purchasing Officer forthwith and shall be attended by him or his designee and such other persons as the Purchasing Officer and the City Manager shall require to attend. The subject matter of said conference shall be limited to the reasons for the protest specified in the written request for said conference. Said conference shall also include a discussion of all possibilities for a resolution of dispute. The City shall make a decision in writing within three (3) business days after said conference and forward the same to the protesting bidder forthwith. In the event that any protesting bidder wishes to take legal action against the City, they must fully comply with all of these instructions to bidders.

8. CITY OF MERIDEN, LOCAL PREFERENCE – N/A

9. EXTENSION OF AGREEMENT – N/A

10. TIME

Inasmuch as the contract concerns a public improvement, the provisions of the contract relating to the time of performance and completion of the work are of the essence of the contract. Accordingly, the successful bidder/contractor ("Contractor") shall begin work on the day specified in paragraph 2.04 of the General Conditions and shall perform the work diligently so as to permit full use not later than the first day following the construction period established in the Contract. See paragraph 10 entitled "Liquidated Damages" of the Agreement between City of Meriden, as owner, and the Contractor.

11. SCHEDULE OF WORK

The Contractor shall schedule all work in a manner that will not disrupt City of Meriden operations. Once the work has begun, the Contractor shall work full-time until completion of the Contract.

12. TAXES

The City of Meriden is exempt under Connecticut General Statutes from the payment of the excise taxes imposed by the federal government and the Sales and Use Tax of the State of Connecticut; such taxes should not be included in the bid price. Upon request, exemption certificates will be furnished to the successful bidder.

13. FAIR EMPLOYMENT PRACTICES

The Contractor shall agree that neither it or its subcontractors, except in the case of a bona fide occupational qualification or need, to refuse to hire or employ or to bar or to discharge from employment any individual or to discriminate against such individual in compensation or in terms, conditions or privileges of employment because of the individual's race, color, religious creed, age, sex, gender identity or expression, marital status, national origin, ancestry, present or past history of mental disability, intellectual disability, learning disability, physical disability, including, but not limited to, blindness or status as a veteran. The aforementioned terms are obtained from Connecticut General Statutes Section 46a-60, *et seq.,* entitled "Discriminatory employment practices prohibited," as amended.

14. FORM OF AGREEMENT BETWEEN CITY OF MERIDEN AND CONTRACTOR

The Agreement for the work will be written on the Agreement between City of Meriden and Contractor, wherein the basis of payment is a stipulated sum.

15. LOCAL SUBCONTRACTORS, SUPPLIERS, etc.

Local subcontractors, material suppliers, and labor in the City of Meriden should be considered and sought out insofar as it is practical in the performance of this project.

16. CITY OF MERIDEN CODE OF ETHICS

The City of Meriden has adopted a Code of Ethics located in Chapter 21 of the Code of the City of Meriden, sections 21-1 through 21-15, inclusive, which are expressly incorporated herein by reference. The terms of the Code of Ethics shall constitute a part of any contract or agreement entered into by the City of Meriden as a result of this bid as if those terms were fully set forth in such contract or agreement.

Bidders are specifically advised that the Code of Ethics prohibits public officers and employees, as well as their immediate families and businesses, with which they are associated from participating in any transaction which is incompatible with the proper discharge of official duties or responsibilities. Bidders are also advised that the Code of Ethics contain provisions with respect to paid contractors and former employees and officials.

BIDDERS SHOULD NOTE THAT BIDS, CONTRACTS, AND AGREEMENTS ENTERED INTO OR AWARDED IN VIOLATION OF THE CODE OF ETHICS ARE VOIDABLE BY RESOLUTION OF THE CITY COUNCIL OF THE CITY OF MERIDEN.

Copies of the Code of Ethics may be obtained from the office of the City Clerk or may be found online on the City of Meriden's website.

17. NON-COLLUSION BID STATEMENT

Each bidder submitting a bid to the City of Meriden for any portion of the work contemplated by the documents on which bidding is based shall execute and attach thereto the sworn Non-Collusive Bid Statement, to the effect that the bidder has not colluded with any other person, firm, or corporation in the submission of the bid.

18. SOIL CONDITIONS

The City of Meriden does not guarantee the accuracy of any information which it may have obtained as to the kind or condition of the soil that may be encountered in the performance of the proposed work; neither does the City of Meriden represent that the plans and specifications drawn are based upon any soil data so obtained. The City of Meriden does not make any representations as to the soil data so obtained. The City of Meriden does not make any representations as to the soil conditions to be encountered or as to foundation materials.

19. AWARD IN CASE OF A TIE

In the event there are two or more responsive bidders, the decision to award will be based by the following criteria and in the following order:

a. The incumbent will be awarded the bid over that of another bidder.
b. In the case of a multi-item bid, if one bidder has been awarded other items from the same bid and the other bidder has not, the bidder with the multiple awards will be awarded the bid over that of another bidder.
c. The bidder located in the State of Connecticut will be awarded the bid over that of another bidder.
d. The winner of a coin toss will be awarded the bid over that of another bidder.

The above-referenced provisions do not apply to those situations in which more than one City-based business responsible bidder has submitted bids not more than ten (10) percent higher than the lowest bid and has agreed to accept the award of the bid at the amount of the lowest bid. Under such circumstances, the provisions of the Code of the City of Meriden, section 13-4, are controlling, as set forth under Section 8 of this 'Information to Bidders.'

20. ASSIGNMENT OF CONTRACT

No contract may be assigned without the written consent of the Purchasing Officer or designee.

21. PERMITS

The Contractor shall be responsible for obtaining any and all necessary permits required by the City of Meriden prior to the commencement of work. The Contractor may contact the City of Meriden Building Department for permit information at (203) 630-4091. For all other required permits, contact the City of Meriden Engineering Department at (203) 630-4018.

22. BID PRICE AND PAYMENT

The City of Meriden is exempt from the payment of the excise taxes imposed by the Federal government and the Sales and Use Tax of the State of Connecticut under Connecticut General Statutes; accordingly, such taxes shall not be included in the bid price.

The City of Meriden, unless stated otherwise in the bidding documents or Contract, will make payment to the Contractor not less than thirty (30) days following completion of services.

23. QUALITY

All materials, equipment, supplies, and services shall be subject to rigid inspection. If defective material, equipment, supplies, or services are discovered, the Contractor shall remove or make good such material, equipment, or supplies without extra compensation. It is expressly understood and agreed that any inspection by the City of Meriden will in no way lessen the responsibility of the Contractor or release Contractor from the obligation to perform and deliver to the City sound and satisfactory materials, equipment, supplies, or allow the cost to be deducted from any monies due it from the City of Meriden. All services will be performed in a workmanlike manner.

24. INSURANCE

The successful bidder shall be required to provide a Certificate of Insurance denoting general liability, automobile liability, workers compensation liability, and other coverage required by the City's Risk Manager.

25. CITY HALL CLOSING

If Meriden City Hall is closed due to inclement weather, or any other unforeseen event, bids will be due at the same time on the next business day that City Hall is open.

26. CHRO

The contractor who is selected to perform this State project must comply with CONN. GEN. STAT. §§ 4a-60, 4a-60a, 4a-60g, and 46a-68b through 46a-68f, inclusive, as amended by June 2015 Special Session Public Act 15-5. An Affirmative Action Plan must be filed with and approved by the Commission on Human Rights and Opportunities prior to the commencement of construction. State law requires a minimum of twenty-five (25%) percent of the state-funded portion of the contract for award to subcontractors holding current certification from the Connecticut Department of Administrative Services ("DAS") under the provisions of CONN. GEN. STAT. § 4a-60g, as amended. (25% of the work with DAS certified Small and Minority owned businesses and 25% of that work with DAS certified Minority, Women and/or Disabled owned businesses.) The contractor must demonstrate good faith effort to meet the 25% set-aside goals. For municipal public works contracts and quasipublic agency projects, the contractor must file a written or electronic non-discrimination certification with the Commission on Human Rights and Opportunities. Forms can be found at http://www.ct.gov/opm/cwp/view.asp?a=2982&q=390928&opmNav_GID=1806.

CITY OF MERIDEN, CONNECTICUT

B024-48 Harbor Brook Bridge Replacements and Utility Improvements, Butler and Hanover Streets

NON-COLLUSIVE BID STATEMENT/AFFIDAVIT

The undersigned bidder, having been duly sworn, does hereby depose and says:

1. The bid has been arrived at by the bidder independently and has been submitted without collusion and without any agreement, understanding, or planned common course of action with any other vendor of materials, supplies, equipment, or services described in the Invitation to Bid.

2. The contents of the bid have not been communicated by the bidder or its employees or agents to any person not an employee or agent of the bidder or its surety on any bond furnished with the bid, and will not be communicated to any such person prior to the official opening of the bid.

3. The undersigned bidder is duly authorized to bind the business entity identified below.

The undersigned bidder further certifies, under oath, that this statement is executed for the purposes of inducing the City of Meriden to consider the bid and make an award in accordance therewith.

_____
Signature of Bidder

_____
Print Legal Name of Bidder

_____
Relationship to Business Entity Below

_____
Business Entity Name, Address, Telephone Number, and Email Address

STATE OF CONNECTICUT)
) ss:
COUNTY OF)

Duly sworn and subscribed to before me
this __ day of _____, 2024.

_____
Notary Public
My Commission Expires:
Commissioner of the Superior Court

BIDDER'S QUALIFICATION STATEMENT

This Statement of Bidder's Qualifications is to be submitted by the bidder at the time of the bid opening. All questions must be answered and the data given must be clear and comprehensive. If necessary, questions must be answered on attached sheets. The bidder may submit any additional information they desire. It is understood that when the City has executed an Agreement, to which these General Conditions are a part, it is, in part, done upon the reliance of the answers provided herein by the bidder or the agent of the bidder.

Firm Name _____

Address _____

_____

_____

Telephone _____ Fax_____

Officers: _____ President

_____ Vice President

_____ Secretary

_____ Treasurer

Bank References: _____

_____

_____

_____

Bond surety Company: _____

_____

If a partnership, give names of partners. If a sole proprietorship, give name and title of a least one responsible employee.

_____

_____

_____

Experience: The Bidder shall be qualified by experience to perform work of this nature and shall list five (5) examples of similar projects completed within the past five (5) years, with the names of responsible parties as references.

PROJECT	OWNER	TELEPHONE NUMBER CONTACT NAME	COST

1. Minority owned business? _____ yes _____ no

2. Years organized. _____

3. Is your company a corporation _____yes _____ no
If yes where incorporated? _____

4. How many years have you been engaged in business under your present firm name? _____

5. Former Firm Name (if any)_____

6. List total number of Personnel _____

7. Is any principal of your firm an employee or public official of the City of Meriden, or an immediate family member of an employee or public official of the City of Meriden? (Definition of immediate family includes: an individual's spouse, fiancé or fiancée; the parent, brother or sister of such individual or spouse; and the child of such individual or the spouse of such child.)
_____ yes _____ no

8. List Vehicles and Equipment that you will use to perform this work: (show age of vehicles and equipment, sizes, capacities, etc.

_____
_____
_____
_____
_____
_____

9. List the work to be performed by Subcontractors and summarize the dollar value of each subcontract.

_____
_____
_____
_____
_____

10. List the name and address of the more important contracts recently completed by you, starting the approximate gross cost for each, and the month and year completed:

_____
_____
_____
_____
_____
_____

11. General character of work performed by you_____

_____
_____

12. Have you ever failed to complete any contract awarded to you? If so, where and why?

_____
_____
_____
_____

13. Have you ever defaulted on a contract? If so where and why?

_____

_____

14. Have you ever filed bankruptcy: _____Please explain:_____

_____

_____

_____

15. Will you, upon request, furnish any information that may be required by the City of Meriden?_____

16. The undersigned hereby authorizes and request any person, firm or cooperation to furnish any information requested by the City of Meriden, in verification of the recitals comprising this Statement of Bidder's Qualifications.

Dated this _____day of _____, 20_____
day month year

_____
Name of Bidder

_____
Title

State of _____
County of _____

_____ being duly sworn deposes and says that they are
Name

_____ of _____
title name of organization

and that the answers to the forgoing question and all statement therein contained are true and correct

Subscribed and sworn to before me
this _____ day of _____ 20_____
day month year

_____
Notary Public signature

My commission expires _____

FORM OF SURETY GUARANTY

(Shall accompany proposal)

KNOW ALL MEN BY THESE PRESENTS, that for and in consideration of the sum of $1.00, lawful money of the United States, the receipt whereof is hereby acknowledged, paid the under said corporation, and for other valuable consideration the

_____

(Name of Surety Company)

a corporation organized and existing under the laws of the State of _____

and licensed to do business in the State of _____ certifies and agrees

that if Contract _____

is awarded to - _____
(Name of Bidder)

Corporation will execute the bond or bonds as required by the Contract Documents and will become surety in the full amount of the Contract price for the faithful performance of the Contract and for payment of all persons supplying labor or furnishing or furnishing materials in connection thence with.

_____
(Surety)

The language of this form shall generally be given on the official form normally provided by the Surety Company complete with the usual proof of Authority of Officers of the Surety Company to execute said official form.

Should a bid be offered with a check as surety without said official form, such bid shall be rejected.

BID BOND

KNOW ALL MEN BY THESE PRESENTS, that we, the undersigned _____,
(Name of Principal)
As Principal, and _____, as Surety are firmly bound
(Name of Surety)
Unto the CITY OF MERIDEN, CONNECTICUT hereinafter called the "OWNER", in the penal sum of

_____DOLLARS, ($_____) lawful money of the United States, for the payment of which sum well and truly to be made, we bind ourselves, our heirs, executors, administrators, successors and assigns, jointly and severally, firmly by these presents:

THE CONDITION OF THIS OBLIGATION IS SUCH THAT, WHEREAS, the said Principal has submitted the Accompanying bid dated _____, 20 _____

For _____

_____

NOW, THEREFORE, if the Principal shall not withdraw said Bid within the Period specified therein after the opening of the same, or if no period be specified, within thirty (30) days after the said opening and shall within the period specified therefore, or if no period be specified, within ten (10) days after the prescribed forms are presented to him for signature, enter into a written Contract with the Owner in accordance with the Bid, as accepted, and give bond with good and sufficient surety or sureties, as may be required for the faithful performance and proper fulfillment of such Contract; or in the event of the withdrawal of said Bid within the period specified, or the failure to enter into such Contract and give such bond within the time specified, if the Principal shall pay the Owner the difference between the amount specified in said Bid and the Amount for which the Owner may procure the required work or supplies or both, if the latter be in excess of the former, then the above obligation shall be voice and of no effect, otherwise to remain in full force and effect.

IN WITNESS WHEREOF, the Principal and the Surety have hereunto set their hands and seals, this _____ day of _____, 20 .

_____
(Principal)

_____
(Address) (Affix seal)

_____ By: _____
Witness Signature

_____
(Surety)

_____
(Address) (Affix seal)

_____ By: _____
Witness Signature

Opportunity ★ Guidance ★ Support

CONNECTICUT DEPARTMENT OF LABOR

THIS IS A PUBLIC WORKS PROJECT

Covered by the

PREVAILING WAGE LAW

CT General Statutes Section 31-53

If you have QUESTIONS regarding your wages
CALL (860) 263-6790

Section 31-55 of the CT State Statutes requires every contractor or subcontractor performing work for the state to post in a prominent place the prevailing wages as determined by the Labor Commissioner.

Sec. 31-53b. Construction safety and health course. New miner training program. Proof of completion required for mechanics, laborers and workers on public works projects. Enforcement. Regulations. Exceptions. (a) Each contract for a public works project entered into on or after July 1, 2009, by the state or any of its agents, or by any political subdivision of the state or any of its agents, described in subsection (g) of section 31-53, shall contain a provision requiring that each contractor furnish proof with the weekly certified payroll form for the first week each employee begins work on such project that any person performing the work of a mechanic, laborer or worker pursuant to the classifications of labor under section 31-53 on such public works project, pursuant to such contract, has completed a course of at least ten hours in duration in construction safety and health approved by the federal Occupational Safety and Health Administration or, has completed a new miner training program approved by the Federal Mine Safety and Health Administration in accordance with 30 CFR 48 or, in the case of telecommunications employees, has completed at least ten hours of training in accordance with 29 CFR 1910.268.

(b) Any person required to complete a course or program under subsection (a) of this section who has not completed the course or program shall be subject to removal from the worksite if the person does not provide documentation of having completed such course or program by the fifteenth day after the date the person is found to be in noncompliance. The Labor Commissioner or said commissioner's designee shall enforce this section.

(c) Not later than January 1, 2009, the Labor Commissioner shall adopt regulations, in accordance with the provisions of chapter 54, to implement the provisions of subsections (a) and (b) of this section. Such regulations shall require that the ten-hour construction safety and health courses required under subsection (a) of this section be conducted in accordance with federal Occupational Safety and Health Administration Training Institute standards, or in accordance with Federal Mine Safety and Health Administration Standards or in accordance with 29 CFR 1910.268, as appropriate. The Labor Commissioner shall accept as sufficient proof of compliance with the provisions of subsection (a) or (b) of this section a student course completion card issued by the federal Occupational Safety and Health Administration Training Institute, or such other proof of compliance said commissioner deems appropriate, dated no earlier than five years before the commencement date of such public works project.

(d) This section shall not apply to employees of public service companies, as defined in section 16-1, or drivers of commercial motor vehicles driving the vehicle on the public works project and delivering or picking up cargo from public works projects provided they perform no labor relating to the project other than the loading and unloading of their cargo.

(P.A. 06-175, S. 1; P.A. 08-83, S. 1.)

History: P.A. 08-83 amended Subsec. (a) by making provisions applicable to public works project contracts entered into on or after July 1, 2009, replacing provision re total cost of work with reference to Sec. 31-53(g), requiring proof in certified payroll form that new mechanic, laborer or worker has completed a 10-hour or more construction safety course and adding provision re new miner training program, amended Subsec. (b) by substituting "person" for "employee" and adding "or program", amended Subsec. (c) by adding "or in accordance with Federal Mine
Safety and Health Administration Standards" and setting new deadline of January 1, 2009, deleted former Subsec. (d) re "public building", added new Subsec. (d) re exemptions for public service company employees and delivery drivers who perform no labor other than delivery and made conforming and technical changes, effective January 1, 2009.

STATUTE 31-55a

- SPECIAL NOTICE -

To: All State and Political Subdivisions,Their Agents, and Contractors

Connecticut General Statute 31-55a - Annual adjustments to wage rates by contractors doing state work.

Each contractor that is awarded a contract on or after October 1, 2002, for (1) the construction of a state highway or bridge that falls under the provisions of section 31-54 of the general statutes, or (2) the construction, remodeling, refinishing, refurbishing, rehabilitation, alteration or repair of any public works project that falls under the provisions of section 31-53 of the general statutes shall contact the Labor Commissioner on or before July first of each year, for the duration of such contract, to ascertain the prevailing rate of wages on an hourly basis and the amount of payment or contributions paid or payable on behalf of each mechanic, laborer or worker employed upon the work contracted to be done, and shall make any necessary adjustments to such prevailing rate of wages and such payment or contributions paid or payable on behalf of each such employee, effective each July first.

- The prevailing wage rates applicable to any contract or subcontract awarded on or after October 1, 2002 are subject to annual adjustments each July 1st for the duration of any project which was originally advertised for bids on or after October 1, 2002.
- Each contractor affected by the above requirement shall pay the annual adjusted prevailing wage rate that is in effect each July 1st, as posted by the Department of Labor.
- It is the ***contractor's*** responsibility to obtain the annual adjusted prevailing wage rate increases directly from the Department of Labor's Web Site. The annual adjustments will be posted on the Department of Labor Web page: www.ctdol.state.ct.us. For those without internet access, please contact the division listed below.
- The Department of Labor will continue to issue the initial prevailing wage rate schedule to the Contracting Agency for the project. All subsequent annual adjustments will be posted on our Web Site for contractor access.

Any questions should be directed to the Contract Compliance Unit, Wage and Workplace Standards Division, Connecticut Department of Labor, 200 Folly Brook Blvd., Wethersfield, CT 06109 at (860)263-6790.

~NOTICE~

TO ALL CONTRACTING AGENCIES

Please be advised that Connecticut General Statutes Section 31-53, requires the contracting agency to certify to the Department of Labor, the total dollar amount of work to be done in connection with such public works project, regardless of whether such project consists of one or more contracts.

Please find the attached "Contracting Agency Certification Form" to be completed and returned to the Department of Labor, Wage and Workplace Standards Division, Public Contract Compliance Unit.

✎ Inquiries can be directed to (860)263-6543.

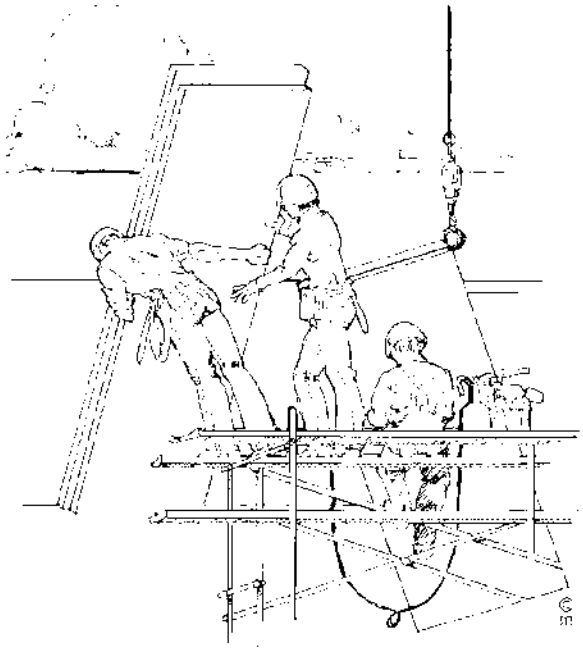

CONNECTICUT DEPARTMENT OF LABOR
WAGE AND WORKPLACE STANDARDS DIVISION
CONTRACT COMPLIANCE UNIT

CONTRACTING AGENCY CERTIFICATION FORM

I, _____, acting in my official capacity as _____,
authorized representative title

for _____, located at _____,
contracting agency address

do hereby certify that the total dollar amount of work to be done in connection with

_____, located at _____,
project name and number address

shall be $_____, which includes all work, regardless of whether such project

consists of one or more contracts.

CONTRACTOR INFORMATION

Name:_____

Address:_____
Authorized Representative:_____
Approximate Starting Date: _____

Approximate Completion Date:_____

_____ _____
Signature Date

Return To: Connecticut Department of Labor
Wage & Workplace Standards Division
Contract Compliance Unit
200 Folly Brook Blvd.
Wethersfield, CT 06109

Date Issued: _____

CONNECTICUT DEPARTMENT OF LABOR
WAGE AND WORKPLACE STANDARDS DIVISION

CONTRACTORS WAGE CERTIFICATION FORM

Construction Manager at Risk/General Contractor/Prime Contractor

I,_____of _____
Officer, Owner, Authorized Rep. Company Name

do hereby certify that the _____
Company Name

_____
Street

_____
City

and all of its subcontractors will pay all workers on the

_____
Project Name and Number

_____
Street and City

the wages as listed in the schedule of prevailing rates required for such project (a copy of which is attached hereto).

_____
Signed

Subscribed and sworn to before me this _____ day of _____,_____.

_____
Notary Public

Return to:

Connecticut Department of Labor
Wage & Workplace Standards Division
200 Folly Brook Blvd.
Wethersfield, CT 06109

Rate Schedule Issued (Date): _____

Informational Bulletin

THE 10-HOUR OSHA CONSTRUCTION SAFETY AND HEALTH COURSE

(applicable to public building contracts entered into *on or after July 1, 2007,* where the total cost of all work to be performed is at least $100,000)

(1) This requirement was created by Public Act No. 06-175, which is codified in Section 31-53b of the Connecticut General Statutes (pertaining to the prevailing wage statutes);

(2) The course is required for public building construction contracts (projects funded in whole or in part by the state or any political subdivision of the state) entered into on or after July 1, 2007;

(3) It is required of private employees (not state or municipal employees) and apprentices who perform manual labor for a general contractor or subcontractor on a public building project where the total cost of all work to be performed is at least $100,000;

(4) The ten-hour construction course pertains to the ten-hour Outreach Course conducted in accordance with federal OSHA Training Institute standards, and, for telecommunications workers, a ten-hour training course conducted in accordance with federal OSHA standard, 29 CFR 1910.268;

(5) The internet website for the federal OSHA Training Institute is http://www.osha.gov/fso/ote/training/edcenters/fact_sheet.html;

(6) The statutory language leaves it to the contractor and its employees to determine who pays for the cost of the ten-hour Outreach Course;

(7) Within 30 days of receiving a contract award, a general contractor must furnish proof to the Labor Commissioner that all employees and apprentices performing manual labor on the project will have completed such a course;

(8) Proof of completion may be demonstrated through either: (a) the presentation of a *bona fide* student course completion card issued by the federal OSHA Training Institute; *or* (2) the presentation of documentation provided to an employee by a trainer certified by the Institute pending the actual issuance of the completion card;

(9) Any card with an issuance date more than 5 years prior to the commencement date of the construction project shall not constitute proof of compliance;

(10) Each employer shall affix a copy of the construction safety course completion card to the certified payroll submitted to the contracting agency in accordance with Conn. Gen. Stat. § 31-53(f) on which such employee's name first appears;

(11) Any employee found to be in non-compliance shall be subject to removal from the worksite if such employee does not provide satisfactory proof of course completion to the Labor Commissioner by the fifteenth day after the date the employee is determined to be in noncompliance;

(12) Any such employee who is determined to be in noncompliance may continue to work on a public building construction project for a maximum of fourteen consecutive calendar days while bringing his or her status into compliance;

(13) The Labor Commissioner may make complaint to the prosecuting authorities regarding any employer or agent of the employer, or officer or agent of the corporation who files a false certified payroll with respect to the status of an employee who is performing manual labor on a public building construction project;

(14) The statute provides the minimum standards required for the completion of a safety course by manual laborers on public construction contracts; any contractor can exceed these minimum requirements; and

(15) Regulations clarifying the statute are currently in the regulatory process, and shall be posted on the CTDOL website as soon as they are adopted in final form.

(16) Any questions regarding this statute may be directed to the Wage and Workplace Standards Division of the Connecticut Labor Department via the internet website of http://www.ctdol.state.ct.us/wgwkstnd/wgemenu.htm; or by telephone at (860)263-6790.

THE ABOVE INFORMATION IS PROVIDED EXCLUSIVELY AS AN EDUCATIONAL RESOURCE, AND IS NOT INTENDED AS A SUBSTITUTE FOR LEGAL INTERPRETATIONS WHICH MAY ULTMATELY ARISE CONCERNIG THE CONSTRUCTION OF THE STATUTE OR THE REGULATIONS.

November 29, 2006

Notice

To All Mason Contractors and Interested Parties Regarding Construction Pursuant to Section 31-53 of the Connecticut General Statutes (Prevailing Wage)

The Connecticut Labor Department Wage and Workplace Standards Division is empowered to enforce the prevailing wage rates on projects covered by the above referenced statute.

Over the past few years the Division has withheld enforcement of the rate in effect for workers who operate a forklift on a prevailing wage rate project due to a potential jurisdictional dispute.

The rate listed in the schedules and in our Occupational Bulletin (see enclosed) has been as follows:

Forklift Operator:

- **Laborers (Group 4) Mason Tenders -** operates forklift solely to assist a mason to a maximum height of nine feet only.

- **Power Equipment Operator (Group 9) -** operates forklift to assist any trade and to assist a mason to a height over nine feet.

The U.S. Labor Department conducted a survey of rates in Connecticut but it has not been published and the rate in effect remains as outlined in the above Occupational Bulletin.

Since this is a classification matter and not one of jurisdiction, effective January 1, 2007 the Connecticut Labor Department will enforce the rate on each schedule in accordance with our statutory authority.

Your cooperation in filing appropriate and accurate certified payrolls is appreciated.

Information Bulletin
Occupational Classifications

The Connecticut Department of Labor has the responsibility to properly determine *"job classification"* on prevailing wage projects covered under C.G.S. Section 31-53(d).

Note: This information is intended to provide a sample of some occupational classifications for guidance purposes only. It is not an all-inclusive list of each occupation's duties. This list is being provided only to highlight some areas where a contractor may be unclear regarding the proper classification. If unsure, the employer should seek guidelines for CTDOL.

Below are additional clarifications of specific job duties performed for certain classifications:

- ***ASBESTOS WORKERS***

Applies all insulating materials, protective coverings, coatings and finishes to all types of mechanical systems.

- ***ASBESTOS INSULATOR***

Handle, install apply, fabricate, distribute, prepare, alter, repair, dismantle, heat and frost insulation, including penetration and fire stopping work on all penetration fire stop systems.

- ***BOILERMAKERS***

Erects hydro plants, incomplete vessels, steel stacks, storage tanks for water, fuel, etc. Builds incomplete boilers, repairs heat exchanges and steam generators.

- ***BRICKLAYERS, CEMENT MASONS, CEMENT FINISHERS, MARBLE MASONS, PLASTERERS, STONE MASONS, PLASTERERS. STONE MASONS, TERRAZZO WORKERS, TILE SETTERS***

Lays building materials such as brick, structural tile and concrete cinder, glass, gypsum, terra cotta block. Cuts, tools and sets marble, sets stone, finishes concrete, applies decorative steel, aluminum and plastic tile, applies cements, sand, pigment and marble chips to floors, stairways, etc.

- ***CARPENTERS, MILLWRIGHTS. PILEDRIVERMEN. LATHERS. RESILEINT FLOOR LAYERS, DOCK BUILDERS, DIKERS, DIVER TENDERS***

Constructs, erects, installs and repairs structures and fixtures of wood, plywood and wallboard. Installs, assembles, dismantles, moves industrial machinery. Drives piling into ground to provide foundations for structures such as buildings and bridges, retaining walls for earth embankments, such as cofferdams. Fastens wooden, metal or rockboard lath to walls, ceilings and partitions of buildings, acoustical tile layer, concrete form builder. Applies firestopping materials on fire resistive joint systems only. Installation of curtain/window walls only where attached to wood or metal studs. Installation of insulated material of all types whether blown, nailed or attached in other ways to walls, ceilings and floors of buildings. Assembly and installation of modular furniture/furniture systems. Free-standing furniture is not covered. This includes free standing: student chairs, study top desks, book box desks, computer furniture, dictionary stand, atlas stand, wood shelving, two-position information access station, file cabinets, storage cabinets, tables, etc.

- **LABORER, CLEANING**

• The clean up of any construction debris and the general (heavy/light) cleaning, including sweeping, wash down, mopping, wiping of the construction facility and its furniture, washing, polishing, and dusting.

- **DELIVERY PERSONNEL**

• If delivery of supplies/building materials is to one common point and stockpiled there, prevailing wages <u>are not required</u>. If the delivery personnel are involved in the distribution of the material to multiple locations within the construction site then they would have to be paid prevailing wages for the type of work performed: laborer, equipment operator, electrician, ironworker, plumber, etc.

• An example of this would be where delivery of drywall is made to a building and the delivery personnel distribute the drywall from one "stockpile" location to further sub-locations on each floor. Distribution of material around a construction site is the job of a laborer or tradesman, and not a delivery personnel.

- ***ELECTRICIANS***

Install, erect, maintenance, alteration or repair of any wire, cable, conduit, etc., which generates, transforms, transmits or uses electrical energy for light, heat, power or other purposes, including the Installation or maintenance of telecommunication, LAN wiring or computer equipment, and low voltage wiring. ****License required per Connecticut General Statutes: E-1,2 L-5,6 C-5,6 T-1,2 L-1,2 V-1,2,7,8,9.***

- ***ELEVATOR CONSTRUCTORS***

Install, erect, maintenance and repair of all types of elevators, escalators, dumb waiters and moving walks. ***License required by Connecticut General Statutes: R-1,2,5,6.***

- ***FORK LIFT OPERATOR***

Laborers Group 4) Mason Tenders - operates forklift solely to assist a mason to a maximum height of nine (9) feet only.

Power Equipment Operator Group 9 - operates forklift to assist any trade, and to assist a mason to a height over nine (9) feet.

- ***GLAZIERS***

Glazing wood and metal sash, doors, partitions, and 2 story aluminum storefronts. Installs glass windows, skylights, store fronts and display cases or surfaces such as building fronts, interior walls, ceilings and table tops and metal store fronts. Installation of aluminum window walls and curtain walls is the "joint" work of glaziers and ironworkers, which require equal composite workforce.

- ***IRONWORKERS***

Erection, installation and placement of structural steel, precast concrete, miscellaneous iron, ornamental iron, metal curtain wall, rigging and reinforcing steel. Handling, sorting, and installation of reinforcing steel (rebar). Metal bridge rail (traffic), metal bridge handrail, and decorative security fence installation. Installation of aluminum window walls and curtain walls is the "joint" work of glaziers and ironworkers which require equal composite workforce.

- ***INSULATOR***

• Installing fire stopping systems/materials for "Penetration Firestop Systems": transit to cables, electrical conduits, insulated pipes, sprinkler pipe penetrations, ductwork behind radiation, electrical cable trays, fire rated pipe penetrations, natural polypropylene, HVAC ducts, plumbing bare metal, telephone and communication wires, and boiler room ceilings.

- ***LABORERS***

Acetylene burners, asphalt rakers, chain saw operators, concrete and power buggy operator, concrete saw operator, fence and guard rail erector (except metal bridge rail (traffic), decorative security fence (non-metal).

installation.), hand operated concrete vibrator operator, mason tenders, pipelayers (installation of storm drainage or sewage lines on the street only), pneumatic drill operator, pneumatic gas and electric drill operator, powermen and wagon drill operator, air track operator, block paver, curb setters, blasters, concrete spreaders.

- ***PAINTERS***

Maintenance, preparation, cleaning, blasting (water and sand, etc.), painting or application of any protective coatings of every description on all bridges and appurtenances of highways, roadways, and railroads. Painting, decorating, hardwood finishing, paper hanging, sign writing, scenic art work and drywall hhg for any and all types of building and residential work.

- ***LEAD PAINT REMOVAL***

• Painter's Rate

1. Removal of lead paint from bridges.
2. Removal of lead paint as preparation of any surface to be repainted.
3. Where removal is on a Demolition project prior to reconstruction.

• Laborer's Rate

1. Removal of lead paint from any surface NOT to be repainted.
2. Where removal is on a *TOTAL* Demolition project only.

- ***PLUMBERS AND PIPEFITTERS***

Installation, repair, replacement, alteration or maintenance of all plumbing, heating, cooling and piping. ****License required per Connecticut General Statutes: P-1,2,6,7,8,9 J-1,2,3,4 SP-1,2 S-1,2,3,4,5,6,7,8 B-1,2,3,4 D-1,2,3,4.***

- ***POWER EQUIPMENT OPERATORS***

Operates several types of power construction equipment such as compressors, pumps, hoists, derricks, cranes, shovels, tractors, scrapers or motor graders, etc. Repairs and maintains equipment. ****License required, crane operators only, per Connecticut General Statutes.***

- ***ROOFERS***

Covers roofs with composition shingles or sheets, wood shingles, slate or asphalt and gravel to waterproof roofs, including preparation of surface. (demolition or removal of any type of roofing and or clean-up of any and all areas where a roof is to be relaid.)

- ***SHEETMETAL WORKERS***

Fabricate, assembles, installs and repairs sheetmetal products and equipment in such areas as ventilation, air-conditioning, warm air heating, restaurant equipment, architectural sheet metal work, sheetmetal roofing, and aluminum gutters. Fabrication, handling, assembling, erecting, altering, repairing, etc. of coated metal material panels and composite metal material panels when used on building exteriors and interiors as soffits, facia, louvers, partitions, canopies, cornice, column covers, awnings, beam covers, cladding, sun shades, lighting troughs, spires, ornamental roofing, metal ceilings, mansards, copings, ornamental and ventilation hoods, vertical and horizontal siding panels, trim, etc. The sheet metal classification also applies to the vast variety of coated metal material panels and composite metal material panels that have evolved over the years as an alternative to conventional ferrous and non-ferrous metals like steel, iron, tin, copper, brass, bronze, aluminum, etc. Fabrication, handling, assembling, erecting, altering, repairing, etc. of architectural metal roof, standing seam roof, composite metal roof, metal and composite bathroom/toilet partitions, aluminum gutters, metal and composite lockers and shelving, kitchen equipment, and walk-in coolers. To include testing and air –balancing ancillary to installation and construction.

- ***SPRINKLER FITTERS***

Installation, alteration, maintenance and repair of fire protection sprinkler systems. ***License required per Connecticut General Statutes: F-1,2,3,4.***

- ***TILE MARBLE AND TERRAZZO FINISHERS***

Assists and tends the tile setter, marble mason and terrazzo worker in the performance of their duties.

- **TRUCK DRIVERS**

~How to pay truck drivers delivering asphalt is under REVISION~

Truck Drivers are requires to be paid prevailing wage for time spent "working" directly on the site. These drivers remain covered by the prevailing wage for any time spent transporting between the actual construction location and facilities (such as fabrication, plants, mobile factories, batch plant, borrow pits, job headquarters, tool yards, etc.) dedicated exclusively, or nearly so, to performance of the contract or project, which are so located in proximity to the actual construction location that it is reasonable to include them. ***License required, drivers only, per Connecticut General Statutes.***

For example:

• Material men and deliverymen are not covered under prevailing wage as long as they are not directly involved in the construction process. If, they unload the material, they would then be covered by prevailing wage for the classification they are performing work in: laborer, equipment operator, etc.
• Hauling material off site is not covered provided they are not dumping it at a location outlined above.
• Driving a truck on site and moving equipment or materials on site would be considered covered work, as this is part of the construction process.

➢ *Any questions regarding the proper classification should be directed to:*

Public Contract Compliance Unit
Wage and Workplace Standards Division
Connecticut Department of Labor
200 Folly Brook Blvd, Wethersfield, CT 06109
(860) 263-6543.

Connecticut Department of Labor
Wage and Workplace Standards Division
FOOTNOTES

⇨ Please Note: If the "Benefits" listed on the schedule for the following occupations includes a letter(s) (+ a or + a+b for instance), refer to the information below.

Benefits to be paid at the appropriate prevailing wage rate for the listed occupation.

If the "Benefits" section for the occupation lists only a dollar amount, disregard the information below.

Bricklayers, Cement Masons, Cement Finishers, Concrete Finishers, Stone Masons
(Building Construction) and
(Residential- Hartford, Middlesex, New Haven, New London and Tolland Counties)

a. Paid Holiday: Employees shall receive 4 hours for Christmas Eve holiday provided the employee works the regularly scheduled day before and after the holiday. Employers may schedule work on Christmas Eve and employees shall receive pay for actual hours worked in addition to holiday pay.

Elevator Constructors: Mechanics

a. Paid Holidays: New Year's Day, Memorial Day, Independence Day, Labor Day, Veterans' Day, Thanksgiving Day, Christmas Day, plus the Friday after Thanksgiving.

b. Vacation: Employer contributes 8% of basic hourly rate for 5 years or more of service or 6% of basic hourly rate for 6 months to 5 years of service as vacation pay credit.

Glaziers

a. Paid Holidays: Labor Day and Christmas Day.

Power Equipment Operators
(Heavy and Highway Construction & Building Construction)

a. Paid Holidays: New Year's Day, Good Friday, Memorial day, Independence Day, Labor Day, Thanksgiving Day and Christmas Day, provided the employee works 3 days during the week in which the holiday falls, if scheduled, and if scheduled, the working day before and the working day after the holiday. Holidays falling on Saturday may be observed on Saturday, or if the employer so elects, on the preceding Friday.

Ironworkers

a. Paid Holiday: Labor Day provided employee has been on the payroll for the 5 consecutive work days prior to Labor Day.

Laborers (Tunnel Construction)

a. Paid Holidays: New Year's Day, Memorial Day, Independence Day, Labor Day, Thanksgiving Day and Christmas Day. No employee shall be eligible for holiday pay when he fails, without cause, to work the regular work day preceding the holiday or the regular work day following the holiday.

Roofers

a. Paid Holidays: July 4th, Labor Day, and Christmas Day provided the employee is employed 15 days prior to the holiday.

Sprinkler Fitters

a. Paid Holidays: Memorial Day, July 4th, Labor Day, Thanksgiving Day and Christmas Day, provided the employee has been in the employment of a contractor 20 working days prior to any such paid holiday.

Truck Drivers

(Heavy and Highway Construction & Building Construction)

a. Paid Holidays: New Year's Day, Memorial Day, Independence Day, Labor Day, Thanksgiving Day, Christmas day, and Good Friday, provided the employee has at least 31 calendar days of service and works the last scheduled day before and the first scheduled day after the holiday, unless excused.

STATE OF CONNECTICUT

PREVAILING WAGE RATES

STANDARD FORM OF AGREEMENT
BETWEEN OWNER AND CONTRACTOR
ON THE BASIS OF A STIPULATED PRICE
B024-48 Harbor Brook Bridge Replacements and Utility Improvements, Butler and Hanover Streets

THIS AGREEMENT is dated as of the _____ day of _____ 2024 by and between the City of Meriden, 142 East Main Street Meriden, CT 06450 hereinafter called OWNER and the _____ hereinafter called CONTRACTOR.

OWNER and CONTRACTOR, in consideration of the mutual covenants hereinafter set forth, agree as follows:

Article 1. WORK.

CONTRACTOR shall complete all Work as specified or indicated in the Contract Documents. The Work is generally described as follows:

The Project for which the Work under the Contract Documents may be the whole or only a part is generally described as follows:

Article 2. ENGINEER.

The Project has been designed by Fuss & O'Neill who is hereinafter called ENGINEER and who is to act as Owner's representative, assume all duties and responsibilities and has the rights and authority assigned to ENGINEER in the Contract Documents in connection with completion of the Work in accordance with the contract documents.

Article 3. CONTRACT TIMES.

3.1 The Contract Work will be substantially completed by Four-Hundred Seventy (470) calendar days after the date when the Contract Times commence to run as provided in paragraph 2.03 of the General Conditions, and completed and ready for final payment in accordance with paragraph 14.07B of the General Conditions by _____ after the date when the Contract Times commence to run.

All work related to the installation of the traffic signal at Cook Avenue (Intersection No. 079-221) will be substantially completed by Two Hundred (200) calendar days after the date when the Contract Times commence to run as provided in paragraph 2.03 of the General Conditions.

All work related to the replacement of the Sewer Bridge will be substantially completed by Two Hundred Forty (240) calendar days after the date when the Contract Times commence to run as provided in paragraph 2.03 of the General Conditions.

3.2 Liquidated Damages. OWNER and CONTRACTOR recognize that time is of the essence of this Agreement and that OWNER will suffer financial loss if the Work is not completed within the times specified in Section 3.1 above, plus any extensions thereof allowed in accordance with Article 12 of the General Conditions. They also recognize the delays, expense and difficulties involved in proving the actual loss suffered by OWNER if the Work is not completed on time. Accordingly, instead of requiring any such proof, OWNER and CONTRACTOR agree that as liquidated damages for delay (but not as a penalty) CONTRACTOR shall pay OWNER One-Thousand Dollars **($1000.00)** for each day that expires after the time specified in Section 3.1 for Substantial Completion until the Work is substantially complete. After Substantial Completion, if CONTRACTOR shall neglect, refuse or fail to complete the remaining Work within the time specified in Section 3.1 for completion and readiness for final payment or any proper extension thereof granted by OWNER, CONTRACTOR shall pay OWNER _____ **($_____.00)** for each day that expires after the time specified in Section 3.1 for completion and readiness for final payment.

Article 4. CONTRACT PRICE.

OWNER shall pay CONTRACTOR for completion of the Work in accordance with the Contract Documents an amount in current funds equal to the sum of the amounts determined pursuant to paragraphs 4.1 and 4.2 below:

4.1. For all Work, other than Unit Price Work, a Lump Sum of: _____
Figures

_____
Written

All specific cash allowances are included in the above price and have been computed in accordance with 11.02 of the General Conditions;
Plus
4.2. For all Unit Price Work, an amount equal to the sum of the established unit price for each separately identified item of Unit Price Work times the estimated quantity of that item as indicated in this paragraph 4.2:

UNIT PRICE WORK

NO.	ITEM	UNIT	ESTIMATED QUANTITY	UNIT PRICE	TOTAL ESTIMATED

TOTAL OF ALL UNIT PRICES:

_____ $_____
Written Figures

Bid Attached.

As provided in paragraph 11.03 of the General Conditions estimated quantities are not guaranteed, and determinations of actual quantities and classification are to be made by ENGINEER as provided in paragraph 9.07 of the General Conditions. Unit prices have been computed as provided in paragraph 11.03C of the General Conditions.

(The Bid may be attached. Any attachments and/or exhibits attached should be listed in Article 8).

If adjustment prices for variations from stipulated Base Bid quantities have been agreed to, insert appropriate provisions.

Article 5. PROGRESS PAYMENTS.

5.1 Based upon applications for Payment submitted to the Engineer by the Contractor and Certificates for Payment issued by the Engineer, the Owner shall make progress payments on account to the Contractor as provided below and elsewhere in the Contract Documents.

5.2 The period covered by each Application for Payment shall be one calendar month ending on the last day of the month.

5.3 Each Application for Payment shall be based upon the Schedule of Values submitted by the Contractor in accordance with the Contract Documents. The Schedule of Values shall allocate the entire Contract Sum among the various portions of the Work and be prepared in such form and supported by such data to substantiate its accuracy as the Engineer may require. This Schedule, unless objected to by the Engineer, shall be used as a basis for reviewing the Contractor's Applications for Payment.

5.4 Applications for Payment shall indicate the percentage of completion of each portion of the Work as of the end of the period covered by the Application for Payment.

5.5 Subject to the provisions of the Contract Documents, the amount of each progress payment shall be computed as follows:

5.6.1 Take that portion of the Contract sum properly allocable to completed work as determined by multiplying the percentage completion of each portion of the Work by the share of the total Contract Sum allocated to that portion of the work in the Schedule of Values, <u>less retainage of five percent (5 percent)</u>. Pending final determination of cost to the Owner of changes in the Work, amounts not in dispute may be included as provided in appropriate sections of the General Conditions even though the Contract Sum has not yet been adjusted by Change Order.

5.6.2 Add that portion of the Contract Sum properly allocable to materials and equipment delivered and suitably stored at the site for subsequent incorporation in the completed construction (or, if approved in advance by the Owner, suitably stored off the site at a location agreed upon in writing) <u>less retainage of five percent (5 percent)</u>.

5.6.3 Subtract the aggregate of previous payments made by the Owner; and

5.6.4 Subtract amounts, if any, for which the Engineer has withheld or nullified a Certificate for Payment as provided in Paragraph 14.02.B.5 of the General Conditions.

5.7 The progress payment amount determined in accordance with Paragraph 5.6 shall be further modified under the following circumstances;

(Not applicable)

5.7.1 Add, upon Substantial Completion of the Work, a sum sufficient to increase the total payments to ninety-five percent (95) of the Contract Sum, less such amounts as the Engineer shall determine for incomplete Work and unsettled claims; and

5.7.2 Add, if final completion of the Work is thereafter materially delayed, through no fault of the Contractor, additional amounts payable in accordance with Paragraph 14.08 of the General Conditions.

5.8 Reduction or limitation of retainage, if any shall be as follows:

(Not applicable)

Article 6. INTEREST.
No interest shall be due or paid on any monies not paid when due.

Article 7. CONTRACTOR'S REPRESENTATIONS.
In order to induce OWNER to enter into this Agreement CONTRACTOR makes the following representations:

7.1. CONTRACTOR has examined and carefully studied the Contract Documents including the Addenda listed in paragraph 8 and the other related data identified in the Bidding Documents including "technical data."

7.2. CONTRACTOR has visited the site and become familiar with and is satisfied as to the general, local and site conditions that may affect cost, progress, performance or furnishing of the Work.

7.3. CONTRACTOR is familiar with and is satisfied as to all federal, state and local Laws and Regulations that may affect cost, progress, performance and furnishing of the Work.

7.4. CONTRACTOR has carefully studied all reports of explorations and tests of subsurface conditions at or contiguous to the site and all drawings of physical conditions in or relating to existing surface or subsurface structures at or contiguous to the site (except Underground Facilities) which have been identified in the Supplementary Conditions as provided in paragraph 4.02 of the General Conditions. CONTRACTOR accepts the determination of the extent of the "technical data" contained in such reports and drawings upon which CONTRACTOR is entitled to rely. CONTRACTOR acknowledges that such reports and drawings are not Contract Documents and may not be complete for Contractor's purposes. CONTRACTOR acknowledges that OWNER and ENGINEER do not assume responsibility for the accuracy or completeness of information and data shown or indicated in the Contract Documents with respect to Underground Facilities at or contiguous to the site. CONTRACTOR has obtained and carefully studied assumes responsibility for having done so) all such additional supplementary examinations, investigations, explorations, tests, studies and data concerning conditions (surface, subsurface and Underground Facilities) at or contiguous to the site or otherwise which may affect cost, progress, performance or furnishing of the Work or which relate to any aspect of the means, methods, techniques, sequences and procedures of construction to be employed by CONTRACTOR and safety precautions and programs incident thereto. CONTRACTOR does not consider that any additional examinations, investigations, explorations, tests, studies or data are necessary for the performance and furnishing of the Work at the Contract Price, within the Contract Times and in accordance with the other terms and conditions of the contract Documents.

7.5. CONTRACTOR is aware of the general nature of work to be performed by OWNER and others at the site that relates to the Work as indicated in the Contract Documents.

7.6. CONTRACTOR has correlated the information known to CONTRACTOR, information and observation obtained from visits to the site, reports and drawings identified in the Contract Documents and all additional examinations, investigations, explorations, tests, studies and data with the Contract Documents.

7.7. CONTRACTOR has given ENGINEER written notice of all conflicts, errors, ambiguities or discrepancies that CONTRACTOR has discovered in the Contract Documents and the written resolution thereof by ENGINEER is acceptable to CONTRACTOR, and the Contract Documents are generally sufficient to indicate and convey understanding of all terms and conditions for performance and furnishing of the Work.

Article 8. CONTRACT DOCUMENTS.
The Contract Documents, which comprise the entire agreement between OWNER and CONTRACTOR concerning the Work, consist of the following:

8.1. This Agreement.

8.2. General Conditions and Supplemental General Conditions.

8.3. Notice of Award – **Attachment A**

8.4. Performance, Payment, and other Bonds – **Attachment B**.

8.5. Insurance certificate – **Attachment C**

8.6. Contractor's Bid Proposal, Non-Collusive Bid Statement, Bidder's Qualification Statement, St of CT Forms that are applicable - **Attachment D**

8.7. Connecticut Department of Labor – Wage and Workplace Standards Division.

8.8. **"By Reference":** The complete Specifications as included in the bidding documents bearing the title.

8.9. **"By Reference":** List of Drawings: Sheet No's. ____ through ____ included in the bidding documents.

The above documents are on file in the City of Meriden's Purchasing Department.

8.10. Addenda numbers _____.
(Those addenda which pertain exclusively to the bidding process need not be listed.)

8.11. The following which may be delivered or issued after the Effective Date of the Agreement and are not attached hereto: All-Written Amendments and other documents amending, modifying or supplementing the Contract Documents pursuant to paragraphs 3.04 and 3.05 of the General Conditions.

There are no Contract Documents other than those listed above. The Contract Documents may only be amended, modified or supplemented as provided in paragraphs 3.04 and 3.05 of the General Conditions.

Article 9. MISCELLANEOUS.

9.1. Terms used in this Agreement which are defined in Article I of the General Conditions will have the meanings indicated in the General Conditions.

9.2. No assignment by a party hereto of any rights under or interests in the Contract Documents will be binding on another party hereto without the written consent of the party sought to be bound; and, specifically but without limitation, moneys that may become due and moneys that are due may not be assigned without such consent (except to the extent that the effect of this restriction may be limited by law), and unless specifically stated to the contrary in any written consent to an assignment no assignment will release or discharge the assignor from any duty or responsibility under the Contract Documents.

9.3. OWNER and CONTRACTOR each binds itself, its partners, successors, assigns and legal representatives to the other party hereto, its partners, successors, assigns and legal representatives in respect to all covenants, agreements and obligations contained in the Contract Documents.

9.4. Any provision or part of the Contract Documents held to be void or unenforceable under any Law or Regulation shall be deemed stricken, and all remaining provisions shall continue to be valid and binding upon OWNER and CONTRACTOR, who agree that the Contract Documents shall be reformed to replace such stricken provision or part thereof with a valid and enforceable provision that comes as close as possible to expressing the intention of the stricken provision.

9.5 OTHER PROVISIONS.

Non-Discrimination and Affirmative Action Provisions

(A)(1) The Contractor agrees and warrants that in the performance of the Contract such Contractor will not discriminate or permit discrimination against any person or group of persons on the grounds of race, color, religious creed, age, marital status, national origin, ancestry, sex, gender identity or expression, sexual orientation, intellectual disability, mental disability or physical disability, including, but not limited to, blindness, unless it is shown by such Contractor that such disability prevents performance of the work involved, in any manner prohibited by the laws of the United States or of the state of Connecticut. The Contractor further agrees to take affirmative action to insure that applicants with job-related qualifications are employed and that employees are treated when employed without regard to of race, color, religious creed, age, marital status, national origin, ancestry, sex, gender identity or expression, intellectual disability, mental disability or physical disability, including, but not limited to, blindness, unless it is shown by such Contractor that such disability prevents performance of the work involved; (2) the Contractor agrees, in all solicitations or advertisements for employees placed by or ·on behalf of the Contractor, to state that it is an ."affirmative action-equal opportunity employer" in accordance with regulations adopted by the commission; (3) the Contractor agrees to provide each labor union or representative of workers with which such Contractor has a collective bargaining agreement or other contract or understanding and each vendor with which such Contractor has a contract or understanding, a notice to be provided by the commission advising the labor union or workers' representative of the Contractor's commitments under this section, and to post copies of the notice in conspicuous places available to employees and applicants for employment; (4) the Contractor agrees to comply with each provision of this section and sections 46a-68e and 46a-68f and with each regulation or relevant order issued by said commission pursuant to sections 46a-56, 46a-68e,46a-68f and 46a-86; (5) the Contractor agrees to provide the Commission on Human Rights and Opportunities with such information requested by the commission, and permit access to pertinent books, records and accounts, concerning the employment practices and procedures of the Contractor as relate to the provisions of this section and section 46a-56.

(B) Any Contractor who is a party to a municipal public works contract or quasi-public agency project, where any such contract is valued at less than $50,000 for each year of the contract, shall provide the Commission on Human Rights and Opportunities with a written or electronic representation that complies with the nondiscrimination agreement and warranty under subsection (A)(1) above, provided if there is any change in such representation, the Contractor shall provide the updated representation to the Commission not later than 30 days after such change. Any Contractor who is a party to a municipal public works contract or a quasi-public agency project, where any such contract is valued at $50,000 or more for any year of the contract, shall provide the Commission with any one of the following: (1) Documentation in the form of a company or corporate police adopted by resolution of the board of directors, shareholder, managers, members or other governing body of such Contractor that complies with the nondiscrimination agreement and warranty under subsection (A)(1) of this section; (2) Documentation in the form of a company or corporate policy adopted by a prior resolution of the board of directors, shareholders, managers, members or other governing body of such contractor if (a) the prior resolution is certified by a duly authorized corporate officer of such contractor to

be in effect on the date the documentation is submitted, and the executive director of the Commission on Human Rights and Opportunities or designee certifies that the prior resolution complies with the nondiscrimination agreement and warranty under subdivision (A)(1) of this section; or (3) Documentation in the form of an affidavit signed under penalty of false statement by a chief executive officer, president, chairperson or other corporate officer duly authorized to adopt company or corporate policy that certifies that the company or corporate policy of the contractor complies with the nondiscrimination agreement and warranty under subdivision (A)(1) of this section and is in effect on the date the affidavit is signed..

(C) If the Contract is a municipal public works contract or a quasi-public agency project, the Contractor agrees and warrants that s/he will make good faith efforts to employ minority business enterprises as subcontractors and suppliers of materials on such public works project. The Contractor shall include the provisions of subdivision (A)(1) of this section in every subcontract or purchase order entered into to fulfill any obligation of a municipal public works contract or contract for a quasi-public agency project, and such provisions shall be binding on a subcontractor, vendor or manufacturer, unless exempted by regulations or orders of the Commission on Human Rights and Opportunities. The Contractor shall take such action with respect to any such subcontract or purchase order as the Commission may direct as a means of enforcing such provisions, including sanctions for noncompliance in accordance with section 46a-56; provided, if such Contractor becomes involved in, or is threatened with, litigation with a subcontractor or vendor as a result of such direction by the Commission regarding a state contract, the contractor may request the state of Connecticut to enter into any such litigation or negotiation prior thereto to protect the interests of the state and the state may so enter.

(D) "Minority business enterprise" means any small contractor or supplier of materials fifty-one per cent or more of the capital stock, if any, or assets of which is owned by a person or persons: (1) Who are active in the daily affairs of the enterprise, (2) who have the power to direct the management and policies of the enterprise and (3) who are members of a minority, as such term is defined in subsection (a) of section 32-9n; and "good faith" means that degree of diligence which a reasonable person would exercise in the performance of legal duties and obligations. "Good faith efforts" shall include, but not be limited to, those reasonable initial efforts necessary to comply with statutory or regulatory requirements and additional or substituted efforts when it is determined that such initial efforts will not be sufficient to comply with such requirements. Determination of the Contractor's good faith efforts shall include, but shall not be eliminated to, the following factors: The contractor's employment and subcontracting policies, patterns and practices; affirmative advertising recruitment and training; technical assistance activities and such other reasonable activities or efforts as the Commission on Human Rights and Opportunities may prescribe that are designed to ensure the participation of minority business enterprises in municipal public works contracts or quasi-public agency projects. "Municipal public works project" means that portion of an agreement entered into on or after October 1, 2015, between any individual, form or corporation and a municipality for the construction, rehabilitation, conversion, extension, demolition or repair of a public building, highway or other changes or improvements in real property, which is financed in whole or in part by the state, including, but not limited to, matching expenditures, grants, loans, insurance or guarantees but excluding any project of an alliance district, as defined in section 10-262u, finance by the state funding in an amount equal to fifty thousand dollars or less. "Quasi-public agency project" means the construction, rehabilitation, conversion, extension, demolition or repair of a building or other changes or improvements in real property pursuant to a contract

entered into on or after October 1, 2015, which is financed in whole or in part by a quasi-public agency using state funds, including, but not limited to, matching expenditures, grants, loans, insurance or guarantees.

[Insert other provisions here if applicable.]

WITNESS WHEREOF, the parties hereto have affixed their names and seals.

THE CITY OF MERIDEN	CONTRACTOR:
_____	_____
Emily E Holland, Acting City Manager Duly Authorized	Duly Authorized
Date: _____	Date: _____

STANDARD GENERAL CONDITIONS OF THE CONSTRUCTION CONTRACT

Prepared by

ENGINEERS JOINT CONTRACT DOCUMENTS COMMITTEE

and

Issued and Published Jointly by

AMERICAN COUNCIL OF ENGINEERING COMPANIES

ASSOCIATED GENERAL CONTRACTORS OF AMERICA

AMERICAN SOCIETY OF CIVIL ENGINEERS

PROFESSIONAL ENGINEERS IN PRIVATE PRACTICE
A Practice Division of the
NATIONAL SOCIETY OF PROFESSIONAL ENGINEERS

Endorsed by

CONSTRUCTION SPECIFICATIONS INSTITUTE

Copyright © 2007 National Society of Professional Engineers for EJCDC. All rights reserved.

Copyright © 2007 National Society of Professional Engineers
1420 King Street, Alexandria, VA 22314-2794
(703) 684-2882
www.nspe.org

American Council of Engineering Companies
1015 15th Street N.W., Washington, DC 20005
(202) 347-7474
www.acec.org

American Society of Civil Engineers
1801 Alexander Bell Drive, Reston, VA 20191-4400
(800) 548-2723
www.asce.org

Associated General Contractors of America
2300 Wilson Boulevard, Suite 400, Arlington, VA 22201-3308
(703) 548-3118
www.agc.org

The copyright for this EJCDC document is owned jointly by the four
EJCDC sponsoring organizations and held in trust for their benefit by NSPE.

Copyright © 2007 National Society of Professional Engineers for EJCDC. All rights reserved.

STANDARD GENERAL CONDITIONS OF THE CONSTRUCTION CONTRACT

TABLE OF CONTENTS

Page

Article 1 – Definitions and Terminology 1
1.01 Defined Terms 1
1.02 Terminology 5

Article 2 – Preliminary Matters 6
2.01 Delivery of Bonds and Evidence of Insurance 6
2.02 Copies of Documents 6
2.03 Commencement of Contract Times; Notice to Proceed 6
2.04 Starting the Work 7
2.05 Before Starting Construction 7
2.06 Preconstruction Conference; Designation of Authorized Representatives 7
2.07 Initial Acceptance of Schedules 7

Article 3 – Contract Documents: Intent, Amending, Reuse 8
3.01 Intent 8
3.02 Reference Standards 8
3.03 Reporting and Resolving Discrepancies 9
3.04 Amending and Supplementing Contract Documents 9
3.05 Reuse of Documents 10
3.06 Electronic Data 10

Article 4 – Availability of Lands; Subsurface and Physical Conditions; Hazardous Environmental Conditions; Reference Points 11
4.01 Availability of Lands 11
4.02 Subsurface and Physical Conditions 11
4.03 Differing Subsurface or Physical Conditions 12
4.04 Underground Facilities 13
4.05 Reference Points 14
4.06 Hazardous Environmental Condition at Site 14

Article 5 – Bonds and Insurance 16
5.01 Performance, Payment, and Other Bonds 16
5.02 Licensed Sureties and Insurers 16
5.03 Certificates of Insurance 17
5.04 Contractor's Insurance 17
5.05 Owner's Liability Insurance 19
5.06 Property Insurance 19
5.07 Waiver of Rights 20
5.08 Receipt and Application of Insurance Proceeds 21

Copyright © 2007 National Society of Professional Engineers for EJCDC. All rights reserved.

5.09 Acceptance of Bonds and Insurance; Option to Replace....21
5.10 Partial Utilization, Acknowledgment of Property Insurer....22

Article 6 – Contractor's Responsibilities....22
6.01 Supervision and Superintendence....22
6.02 Labor; Working Hours....22
6.03 Services, Materials, and Equipment....22
6.04 Progress Schedule....23
6.05 Substitutes and "Or-Equals"....23
6.06 Concerning Subcontractors, Suppliers, and Others....25
6.07 Patent Fees and Royalties....27
6.08 Permits....27
6.09 Laws and Regulations....28
6.10 Taxes....28
6.11 Use of Site and Other Areas....28
6.12 Record Documents....29
6.13 Safety and Protection....29
6.14 Safety Representative....30
6.15 Hazard Communication Programs....30
6.16 Emergencies....30
6.17 Shop Drawings and Samples....31
6.18 Continuing the Work....32
6.19 Contractor's General Warranty and Guarantee....33
6.20 Indemnification....33
6.21 Delegation of Professional Design Services....34

Article 7 – Other Work at the Site....35
7.01 Related Work at Site....35
7.02 Coordination....35
7.03 Legal Relationships....36

Article 8 – Owner's Responsibilities....36
8.01 Communications to Contractor....36
8.02 Replacement of Engineer....36
8.03 Furnish Data....36
8.04 Pay When Due....36
8.05 Lands and Easements; Reports and Tests....36
8.06 Insurance....36
8.07 Change Orders....37
8.08 Inspections, Tests, and Approvals....37
8.09 Limitations on Owner's Responsibilities....37
8.10 Undisclosed Hazardous Environmental Condition....37
8.11 Evidence of Financial Arrangements....37
8.12 Compliance with Safety Program....37

Article 9 – Engineer's Status During Construction....37
9.01 Owner's Representative....37

Copyright © 2007 National Society of Professional Engineers for EJCDC. All rights reserved.

9.02 Visits to Site....37
9.03 Project Representative....38
9.04 Authorized Variations in Work....38
9.05 Rejecting Defective Work....38
9.06 Shop Drawings, Change Orders and Payments....39
9.07 Determinations for Unit Price Work....39
9.08 Decisions on Requirements of Contract Documents and Acceptability of Work....39
9.09 Limitations on Engineer's Authority and Responsibilities....39
9.10 Compliance with Safety Program....40

Article 10 – Changes in the Work; Claims....40
10.01 Authorized Changes in the Work....40
10.02 Unauthorized Changes in the Work....41
10.03 Execution of Change Orders....41
10.04 Notification to Surety....41
10.05 Claims....41

Article 11 – Cost of the Work; Allowances; Unit Price Work....42
11.01 Cost of the Work....42
11.02 Allowances....45
11.03 Unit Price Work....45

Article 12 – Change of Contract Price; Change of Contract Times....46
12.01 Change of Contract Price....46
12.02 Change of Contract Times....47
12.03 Delays....47

Article 13 – Tests and Inspections; Correction, Removal or Acceptance of Defective Work....48
13.01 Notice of Defects....48
13.02 Access to Work....48
13.03 Tests and Inspections....49
13.04 Uncovering Work....49
13.05 Owner May Stop the Work....50
13.06 Correction or Removal of Defective Work....50
13.07 Correction Period....50
13.08 Acceptance of Defective Work....51
13.09 Owner May Correct Defective Work....52

Article 14 – Payments to Contractor and Completion....52
14.01 Schedule of Values....52
14.02 Progress Payments....52
14.03 Contractor's Warranty of Title....55
14.04 Substantial Completion....55
14.05 Partial Utilization....56
14.06 Final Inspection....57
14.07 Final Payment....57
14.08 Final Completion Delayed....58

Copyright © 2007 National Society of Professional Engineers for EJCDC. All rights reserved.

14.09 Waiver of Claims....58

Article 15 – Suspension of Work and Termination....59
15.01 Owner May Suspend Work....59
15.02 Owner May Terminate for Cause....59
15.03 Owner May Terminate For Convenience....60
15.04 Contractor May Stop Work or Terminate....60

Article 16 – Dispute Resolution....61
16.01 Methods and Procedures....61

Article 17 – Miscellaneous....61
17.01 Giving Notice....61
17.02 Computation of Times....62
17.03 Cumulative Remedies....62
17.04 Survival of Obligations....62
17.05 Controlling Law....62
17.06 Headings....62

Copyright © 2007 National Society of Professional Engineers for EJCDC. All rights reserved.

ARTICLE 1 – DEFINITIONS AND TERMINOLOGY

1.01 *Defined Terms*

A. Wherever used in the Bidding Requirements or Contract Documents and printed with initial capital letters, the terms listed below will have the meanings indicated which are applicable to both the singular and plural thereof. In addition to terms specifically defined, terms with initial capital letters in the Contract Documents include references to identified articles and paragraphs, and the titles of other documents or forms.

1. *Addenda*—Written or graphic instruments issued prior to the opening of Bids which clarify, correct, or change the Bidding Requirements or the proposed Contract Documents.

2. *Agreement*—The written instrument which is evidence of the agreement between Owner and Contractor covering the Work.

3. *Application for Payment*—The form acceptable to Engineer which is to be used by Contractor during the course of the Work in requesting progress or final payments and which is to be accompanied by such supporting documentation as is required by the Contract Documents.

4. *Asbestos*—Any material that contains more than one percent asbestos and is friable or is releasing asbestos fibers into the air above current action levels established by the United States Occupational Safety and Health Administration.

5. *Bid*—The offer or proposal of a Bidder submitted on the prescribed form setting forth the prices for the Work to be performed.

6. *Bidder*—The individual or entity who submits a Bid directly to Owner.

7. *Bidding Documents*—The Bidding Requirements and the proposed Contract Documents (including all Addenda).

8. *Bidding Requirements*—The advertisement or invitation to bid, Instructions to Bidders, Bid security of acceptable form, if any, and the Bid Form with any supplements.

9. *Change Order*—A document recommended by Engineer which is signed by Contractor and Owner and authorizes an addition, deletion, or revision in the Work or an adjustment in the Contract Price or the Contract Times, issued on or after the Effective Date of the Agreement.

10. *Claim*—A demand or assertion by Owner or Contractor seeking an adjustment of Contract Price or Contract Times, or both, or other relief with respect to the terms of the Contract. A demand for money or services by a third party is not a Claim.

11. *Contract*—The entire and integrated written agreement between the Owner and Contractor concerning the Work. The Contract supersedes prior negotiations, representations, or agreements, whether written or oral.

Copyright © 2007 National Society of Professional Engineers for EJCDC. All rights reserved.

12. *Contract Documents*—Those items so designated in the Agreement. Only printed or hard copies of the items listed in the Agreement are Contract Documents. Approved Shop Drawings, other Contractor submittals, and the reports and drawings of subsurface and physical conditions are not Contract Documents.

13. *Contract Price*—The moneys payable by Owner to Contractor for completion of the Work in accordance with the Contract Documents as stated in the Agreement (subject to the provisions of Paragraph 11.03 in the case of Unit Price Work).

14. *Contract Times*—The number of days or the dates stated in the Agreement to: (i) achieve Milestones, if any; (ii) achieve Substantial Completion; and (iii) complete the Work so that it is ready for final payment as evidenced by Engineer's written recommendation of final payment.

15. *Contractor*—The individual or entity with whom Owner has entered into the Agreement.

16. *Cost of the Work*—See Paragraph 11.01 for definition.

17. *Drawings*—That part of the Contract Documents prepared or approved by Engineer which graphically shows the scope, extent, and character of the Work to be performed by Contractor. Shop Drawings and other Contractor submittals are not Drawings as so defined.

18. *Effective Date of the Agreement*—The date indicated in the Agreement on which it becomes effective, but if no such date is indicated, it means the date on which the Agreement is signed and delivered by the last of the two parties to sign and deliver.

19. *Engineer*—The individual or entity named as such in the Agreement.

20. *Field Order*—A written order issued by Engineer which requires minor changes in the Work but which does not involve a change in the Contract Price or the Contract Times.

21. *General Requirements*—Sections of Division 1 of the Specifications.

22. *Hazardous Environmental Condition*—The presence at the Site of Asbestos, PCBs, Petroleum, Hazardous Waste, or Radioactive Material in such quantities or circumstances that may present a substantial danger to persons or property exposed thereto.

23. *Hazardous Waste*—The term Hazardous Waste shall have the meaning provided in Section 1004 of the Solid Waste Disposal Act (42 USC Section 6903) as amended from time to time.

24. *Laws and Regulations; Laws or Regulations*—Any and all applicable laws, rules, regulations, ordinances, codes, and orders of any and all governmental bodies, agencies, authorities, and courts having jurisdiction.

25. *Liens*—Charges, security interests, or encumbrances upon Project funds, real property, or personal property.

26. *Milestone*—A principal event specified in the Contract Documents relating to an intermediate completion date or time prior to Substantial Completion of all the Work.

Copyright © 2007 National Society of Professional Engineers for EJCDC. All rights reserved.

27. *Notice of Award*—The written notice by Owner to the Successful Bidder stating that upon timely compliance by the Successful Bidder with the conditions precedent listed therein, Owner will sign and deliver the Agreement.

28. *Notice to Proceed*—A written notice given by Owner to Contractor fixing the date on which the Contract Times will commence to run and on which Contractor shall start to perform the Work under the Contract Documents.

29. *Owner*—The individual or entity with whom Contractor has entered into the Agreement and for whom the Work is to be performed.

30. *PCBs*—Polychlorinated biphenyls.

31. *Petroleum*—Petroleum, including crude oil or any fraction thereof which is liquid at standard conditions of temperature and pressure (60 degrees Fahrenheit and 14.7 pounds per square inch absolute), such as oil, petroleum, fuel oil, oil sludge, oil refuse, gasoline, kerosene, and oil mixed with other non-Hazardous Waste and crude oils.

32. *Progress Schedule*—A schedule, prepared and maintained by Contractor, describing the sequence and duration of the activities comprising the Contractor's plan to accomplish the Work within the Contract Times.

33. *Project*—The total construction of which the Work to be performed under the Contract Documents may be the whole, or a part.

34. *Project Manual*—The bound documentary information prepared for bidding and constructing the Work. A listing of the contents of the Project Manual, which may be bound in one or more volumes, is contained in the table(s) of contents.

35. *Radioactive Material*—Source, special nuclear, or byproduct material as defined by the Atomic Energy Act of 1954 (42 USC Section 2011 et seq.) as amended from time to time.

36. *Resident Project Representative*—The authorized representative of Engineer who may be assigned to the Site or any part thereof.

37. *Samples*—Physical examples of materials, equipment, or workmanship that are representative of some portion of the Work and which establish the standards by which such portion of the Work will be judged.

38. *Schedule of Submittals*—A schedule, prepared and maintained by Contractor, of required submittals and the time requirements to support scheduled performance of related construction activities.

39. *Schedule of Values*—A schedule, prepared and maintained by Contractor, allocating portions of the Contract Price to various portions of the Work and used as the basis for reviewing Contractor's Applications for Payment.

Copyright © 2007 National Society of Professional Engineers for EJCDC. All rights reserved.

40. *Shop Drawings*—All drawings, diagrams, illustrations, schedules, and other data or information which are specifically prepared or assembled by or for Contractor and submitted by Contractor to illustrate some portion of the Work.

41. *Site*—Lands or areas indicated in the Contract Documents as being furnished by Owner upon which the Work is to be performed, including rights-of-way and easements for access thereto, and such other lands furnished by Owner which are designated for the use of Contractor.

42. *Specifications*—That part of the Contract Documents consisting of written requirements for materials, equipment, systems, standards and workmanship as applied to the Work, and certain administrative requirements and procedural matters applicable thereto.

43. *Subcontractor*—An individual or entity having a direct contract with Contractor or with any other Subcontractor for the performance of a part of the Work at the Site.

44. *Substantial Completion*—The time at which the Work (or a specified part thereof) has progressed to the point where, in the opinion of Engineer, the Work (or a specified part thereof) is sufficiently complete, in accordance with the Contract Documents, so that the Work (or a specified part thereof) can be utilized for the purposes for which it is intended. The terms "substantially complete" and "substantially completed" as applied to all or part of the Work refer to Substantial Completion thereof.

45. *Successful Bidder*—The Bidder submitting a responsive Bid to whom Owner makes an award.

46. *Supplementary Conditions*—That part of the Contract Documents which amends or supplements these General Conditions.

47. *Supplier*—A manufacturer, fabricator, supplier, distributor, materialman, or vendor having a direct contract with Contractor or with any Subcontractor to furnish materials or equipment to be incorporated in the Work by Contractor or Subcontractor.

48. *Underground Facilities*—All underground pipelines, conduits, ducts, cables, wires, manholes, vaults, tanks, tunnels, or other such facilities or attachments, and any encasements containing such facilities, including those that convey electricity, gases, steam, liquid petroleum products, telephone or other communications, cable television, water, wastewater, storm water, other liquids or chemicals, or traffic or other control systems.

49. *Unit Price Work*—Work to be paid for on the basis of unit prices.

50. *Work*—The entire construction or the various separately identifiable parts thereof required to be provided under the Contract Documents. Work includes and is the result of performing or providing all labor, services, and documentation necessary to produce such construction, and furnishing, installing, and incorporating all materials and equipment into such construction, all as required by the Contract Documents.

51. *Work Change Directive*—A written statement to Contractor issued on or after the Effective Date of the Agreement and signed by Owner and recommended by Engineer ordering an

Copyright © 2007 National Society of Professional Engineers for EJCDC. All rights reserved.

addition, deletion, or revision in the Work, or responding to differing or unforeseen subsurface or physical conditions under which the Work is to be performed or to emergencies. A Work Change Directive will not change the Contract Price or the Contract Times but is evidence that the parties expect that the change ordered or documented by a Work Change Directive will be incorporated in a subsequently issued Change Order following negotiations by the parties as to its effect, if any, on the Contract Price or Contract Times.

1.02 *Terminology*

A. The words and terms discussed in Paragraph 1.02.B through F are not defined but, when used in the Bidding Requirements or Contract Documents, have the indicated meaning.

B. *Intent of Certain Terms or Adjectives:*

1. The Contract Documents include the terms "as allowed," "as approved," "as ordered," "as directed" or terms of like effect or import to authorize an exercise of professional judgment by Engineer. In addition, the adjectives "reasonable," "suitable," "acceptable," "proper," "satisfactory," or adjectives of like effect or import are used to describe an action or determination of Engineer as to the Work. It is intended that such exercise of professional judgment, action, or determination will be solely to evaluate, in general, the Work for compliance with the information in the Contract Documents and with the design concept of the Project as a functioning whole as shown or indicated in the Contract Documents (unless there is a specific statement indicating otherwise). The use of any such term or adjective is not intended to and shall not be effective to assign to Engineer any duty or authority to supervise or direct the performance of the Work, or any duty or authority to undertake responsibility contrary to the provisions of Paragraph 9.09 or any other provision of the Contract Documents.

C. *Day:*

1. The word "day" means a calendar day of 24 hours measured from midnight to the next midnight.

D. *Defective:*

1. The word "defective," when modifying the word "Work," refers to Work that is unsatisfactory, faulty, or deficient in that it:

a. does not conform to the Contract Documents; or

b. does not meet the requirements of any applicable inspection, reference standard, test, or approval referred to in the Contract Documents; or

c. has been damaged prior to Engineer's recommendation of final payment (unless responsibility for the protection thereof has been assumed by Owner at Substantial Completion in accordance with Paragraph 14.04 or 14.05).

Copyright © 2007 National Society of Professional Engineers for EJCDC. All rights reserved.

E. *Furnish, Install, Perform, Provide:*

1. The word "furnish," when used in connection with services, materials, or equipment, shall mean to supply and deliver said services, materials, or equipment to the Site (or some other specified location) ready for use or installation and in usable or operable condition.

2. The word "install," when used in connection with services, materials, or equipment, shall mean to put into use or place in final position said services, materials, or equipment complete and ready for intended use.

3. The words "perform" or "provide," when used in connection with services, materials, or equipment, shall mean to furnish and install said services, materials, or equipment complete and ready for intended use.

4. When "furnish," "install," "perform," or "provide" is not used in connection with services, materials, or equipment in a context clearly requiring an obligation of Contractor, "provide" is implied.

F. Unless stated otherwise in the Contract Documents, words or phrases that have a well-known technical or construction industry or trade meaning are used in the Contract Documents in accordance with such recognized meaning.

ARTICLE 2 – PRELIMINARY MATTERS

2.01 *Delivery of Bonds and Evidence of Insurance*

A. When Contractor delivers the executed counterparts of the Agreement to Owner, Contractor shall also deliver to Owner such bonds as Contractor may be required to furnish.

B. *Evidence of Insurance:* Before any Work at the Site is started, Contractor and Owner shall each deliver to the other, with copies to each additional insured identified in the Supplementary Conditions, certificates of insurance (and other evidence of insurance which either of them or any additional insured may reasonably request) which Contractor and Owner respectively are required to purchase and maintain in accordance with Article 5.

2.02 *Copies of Documents*

A. Owner shall furnish to Contractor up to ten printed or hard copies of the Drawings and Project Manual. Additional copies will be furnished upon request at the cost of reproduction.

2.03 *Commencement of Contract Times; Notice to Proceed*

A. The Contract Times will commence to run on the thirtieth day after the Effective Date of the Agreement or, if a Notice to Proceed is given, on the day indicated in the Notice to Proceed. A Notice to Proceed may be given at any time within 30 days after the Effective Date of the Agreement. In no event will the Contract Times commence to run later than the sixtieth day after the day of Bid opening or the thirtieth day after the Effective Date of the Agreement, whichever date is earlier.

Copyright © 2007 National Society of Professional Engineers for EJCDC. All rights reserved.

2.04 *Starting the Work*

A. Contractor shall start to perform the Work on the date when the Contract Times commence to run. No Work shall be done at the Site prior to the date on which the Contract Times commence to run.

2.05 *Before Starting Construction*

A. *Preliminary Schedules:* Within 10 days after the Effective Date of the Agreement (unless otherwise specified in the General Requirements), Contractor shall submit to Engineer for timely review:

1. a preliminary Progress Schedule indicating the times (numbers of days or dates) for starting and completing the various stages of the Work, including any Milestones specified in the Contract Documents;

2. a preliminary Schedule of Submittals; and

3. a preliminary Schedule of Values for all of the Work which includes quantities and prices of items which when added together equal the Contract Price and subdivides the Work into component parts in sufficient detail to serve as the basis for progress payments during performance of the Work. Such prices will include an appropriate amount of overhead and profit applicable to each item of Work.

2.06 *Preconstruction Conference; Designation of Authorized Representatives*

A. Before any Work at the Site is started, a conference attended by Owner, Contractor, Engineer, and others as appropriate will be held to establish a working understanding among the parties as to the Work and to discuss the schedules referred to in Paragraph 2.05.A, procedures for handling Shop Drawings and other submittals, processing Applications for Payment, and maintaining required records.

B. At this conference Owner and Contractor each shall designate, in writing, a specific individual to act as its authorized representative with respect to the services and responsibilities under the Contract. Such individuals shall have the authority to transmit instructions, receive information, render decisions relative to the Contract, and otherwise act on behalf of each respective party.

2.07 *Initial Acceptance of Schedules*

A. At least 10 days before submission of the first Application for Payment a conference attended by Contractor, Engineer, and others as appropriate will be held to review for acceptability to Engineer as provided below the schedules submitted in accordance with Paragraph 2.05.A. Contractor shall have an additional 10 days to make corrections and adjustments and to complete and resubmit the schedules. No progress payment shall be made to Contractor until acceptable schedules are submitted to Engineer.

1. The Progress Schedule will be acceptable to Engineer if it provides an orderly progression of the Work to completion within the Contract Times. Such acceptance will not impose on

Copyright © 2007 National Society of Professional Engineers for EJCDC. All rights reserved.

Engineer responsibility for the Progress Schedule, for sequencing, scheduling, or progress of the Work, nor interfere with or relieve Contractor from Contractor's full responsibility therefor.

2. Contractor's Schedule of Submittals will be acceptable to Engineer if it provides a workable arrangement for reviewing and processing the required submittals.

3. Contractor's Schedule of Values will be acceptable to Engineer as to form and substance if it provides a reasonable allocation of the Contract Price to component parts of the Work.

ARTICLE 3 – CONTRACT DOCUMENTS: INTENT, AMENDING, REUSE

3.01 *Intent*

A. The Contract Documents are complementary; what is required by one is as binding as if required by all.

B. It is the intent of the Contract Documents to describe a functionally complete project (or part thereof) to be constructed in accordance with the Contract Documents. Any labor, documentation, services, materials, or equipment that reasonably may be inferred from the Contract Documents or from prevailing custom or trade usage as being required to produce the indicated result will be provided whether or not specifically called for, at no additional cost to Owner.

C. Clarifications and interpretations of the Contract Documents shall be issued by Engineer as provided in Article 9.

3.02 *Reference Standards*

A. Standards, Specifications, Codes, Laws, and Regulations

1. Reference to standards, specifications, manuals, or codes of any technical society, organization, or association, or to Laws or Regulations, whether such reference be specific or by implication, shall mean the standard, specification, manual, code, or Laws or Regulations in effect at the time of opening of Bids (or on the Effective Date of the Agreement if there were no Bids), except as may be otherwise specifically stated in the Contract Documents.

2. No provision of any such standard, specification, manual, or code, or any instruction of a Supplier, shall be effective to change the duties or responsibilities of Owner, Contractor, or Engineer, or any of their subcontractors, consultants, agents, or employees, from those set forth in the Contract Documents. No such provision or instruction shall be effective to assign to Owner, Engineer, or any of their officers, directors, members, partners, employees, agents, consultants, or subcontractors, any duty or authority to supervise or direct the performance of the Work or any duty or authority to undertake responsibility inconsistent with the provisions of the Contract Documents.

Copyright © 2007 National Society of Professional Engineers for EJCDC. All rights reserved.

3.03 *Reporting and Resolving Discrepancies*

A. *Reporting Discrepancies:*

1. *Contractor's Review of Contract Documents Before Starting Work*: Before undertaking each part of the Work, Contractor shall carefully study and compare the Contract Documents and check and verify pertinent figures therein and all applicable field measurements. Contractor shall promptly report in writing to Engineer any conflict, error, ambiguity, or discrepancy which Contractor discovers, or has actual knowledge of, and shall obtain a written interpretation or clarification from Engineer before proceeding with any Work affected thereby.

2. *Contractor's Review of Contract Documents During Performance of Work*: If, during the performance of the Work, Contractor discovers any conflict, error, ambiguity, or discrepancy within the Contract Documents, or between the Contract Documents and (a) any applicable Law or Regulation , (b) any standard, specification, manual, or code, or (c) any instruction of any Supplier, then Contractor shall promptly report it to Engineer in writing. Contractor shall not proceed with the Work affected thereby (except in an emergency as required by Paragraph 6.16.A) until an amendment or supplement to the Contract Documents has been issued by one of the methods indicated in Paragraph 3.04.

3. Contractor shall not be liable to Owner or Engineer for failure to report any conflict, error, ambiguity, or discrepancy in the Contract Documents unless Contractor had actual knowledge thereof.

B. *Resolving Discrepancies:*

1. Except as may be otherwise specifically stated in the Contract Documents, the provisions of the Contract Documents shall take precedence in resolving any conflict, error, ambiguity, or discrepancy between the provisions of the Contract Documents and:

   a. the provisions of any standard, specification, manual, or code, or the instruction of any Supplier (whether or not specifically incorporated by reference in the Contract Documents); or

   b. the provisions of any Laws or Regulations applicable to the performance of the Work (unless such an interpretation of the provisions of the Contract Documents would result in violation of such Law or Regulation).

3.04 *Amending and Supplementing Contract Documents*

A. The Contract Documents may be amended to provide for additions, deletions, and revisions in the Work or to modify the terms and conditions thereof by either a Change Order or a Work Change Directive.

B. The requirements of the Contract Documents may be supplemented, and minor variations and deviations in the Work may be authorized, by one or more of the following ways:

Copyright © 2007 National Society of Professional Engineers for EJCDC. All rights reserved.

1. A Field Order;

2. Engineer's approval of a Shop Drawing or Sample (subject to the provisions of Paragraph 6.17.D.3); or

3. Engineer's written interpretation or clarification.

3.05 *Reuse of Documents*

A. Contractor and any Subcontractor or Supplier shall not:

1. have or acquire any title to or ownership rights in any of the Drawings, Specifications, or other documents (or copies of any thereof) prepared by or bearing the seal of Engineer or its consultants, including electronic media editions; or

2. reuse any such Drawings, Specifications, other documents, or copies thereof on extensions of the Project or any other project without written consent of Owner and Engineer and specific written verification or adaptation by Engineer.

B. The prohibitions of this Paragraph 3.05 will survive final payment, or termination of the Contract. Nothing herein shall preclude Contractor from retaining copies of the Contract Documents for record purposes.

3.06 *Electronic Data*

A. Unless otherwise stated in the Supplementary Conditions, the data furnished by Owner or Engineer to Contractor, or by Contractor to Owner or Engineer, that may be relied upon are limited to the printed copies (also known as hard copies). Files in electronic media format of text, data, graphics, or other types are furnished only for the convenience of the receiving party. Any conclusion or information obtained or derived from such electronic files will be at the user's sole risk. If there is a discrepancy between the electronic files and the hard copies, the hard copies govern.

B. Because data stored in electronic media format can deteriorate or be modified inadvertently or otherwise without authorization of the data's creator, the party receiving electronic files agrees that it will perform acceptance tests or procedures within 60 days, after which the receiving party shall be deemed to have accepted the data thus transferred. Any errors detected within the 60-day acceptance period will be corrected by the transferring party.

C. When transferring documents in electronic media format, the transferring party makes no representations as to long term compatibility, usability, or readability of documents resulting from the use of software application packages, operating systems, or computer hardware differing from those used by the data's creator.

Copyright © 2007 National Society of Professional Engineers for EJCDC. All rights reserved.

ARTICLE 4 – AVAILABILITY OF LANDS; SUBSURFACE AND PHYSICAL CONDITIONS; HAZARDOUS ENVIRONMENTAL CONDITIONS; REFERENCE POINTS

4.01 *Availability of Lands*

A. Owner shall furnish the Site. Owner shall notify Contractor of any encumbrances or restrictions not of general application but specifically related to use of the Site with which Contractor must comply in performing the Work. Owner will obtain in a timely manner and pay for easements for permanent structures or permanent changes in existing facilities. If Contractor and Owner are unable to agree on entitlement to or on the amount or extent, if any, of any adjustment in the Contract Price or Contract Times, or both, as a result of any delay in Owner's furnishing the Site or a part thereof, Contractor may make a Claim therefor as provided in Paragraph 10.05.

B. Upon reasonable written request, Owner shall furnish Contractor with a current statement of record legal title and legal description of the lands upon which the Work is to be performed and Owner's interest therein as necessary for giving notice of or filing a mechanic's or construction lien against such lands in accordance with applicable Laws and Regulations.

C. Contractor shall provide for all additional lands and access thereto that may be required for temporary construction facilities or storage of materials and equipment.

4.02 *Subsurface and Physical Conditions*

A. *Reports and Drawings:* The Supplementary Conditions identify:

1. those reports known to Owner of explorations and tests of subsurface conditions at or contiguous to the Site; and

2. those drawings known to Owner of physical conditions relating to existing surface or subsurface structures at the Site (except Underground Facilities).

B. *Limited Reliance by Contractor on Technical Data Authorized:* Contractor may rely upon the accuracy of the "technical data" contained in such reports and drawings, but such reports and drawings are not Contract Documents. Such "technical data" is identified in the Supplementary Conditions. Except for such reliance on such "technical data," Contractor may not rely upon or make any claim against Owner or Engineer, or any of their officers, directors, members, partners, employees, agents, consultants, or subcontractors with respect to:

1. the completeness of such reports and drawings for Contractor's purposes, including, but not limited to, any aspects of the means, methods, techniques, sequences, and procedures of construction to be employed by Contractor, and safety precautions and programs incident thereto; or

2. other data, interpretations, opinions, and information contained in such reports or shown or indicated in such drawings; or

3. any Contractor interpretation of or conclusion drawn from any "technical data" or any such other data, interpretations, opinions, or information.

Copyright © 2007 National Society of Professional Engineers for EJCDC. All rights reserved.

4.03 *Differing Subsurface or Physical Conditions*

A. *Notice:* If Contractor believes that any subsurface or physical condition that is uncovered or revealed either:

1. is of such a nature as to establish that any "technical data" on which Contractor is entitled to rely as provided in Paragraph 4.02 is materially inaccurate; or

2. is of such a nature as to require a change in the Contract Documents; or

3. differs materially from that shown or indicated in the Contract Documents; or

4. is of an unusual nature, and differs materially from conditions ordinarily encountered and generally recognized as inherent in work of the character provided for in the Contract Documents;

then Contractor shall, promptly after becoming aware thereof and before further disturbing the subsurface or physical conditions or performing any Work in connection therewith (except in an emergency as required by Paragraph 6.16.A), notify Owner and Engineer in writing about such condition. Contractor shall not further disturb such condition or perform any Work in connection therewith (except as aforesaid) until receipt of written order to do so.

B. *Engineer's Review*: After receipt of written notice as required by Paragraph 4.03.A, Engineer will promptly review the pertinent condition, determine the necessity of Owner's obtaining additional exploration or tests with respect thereto, and advise Owner in writing (with a copy to Contractor) of Engineer's findings and conclusions.

C. *Possible Price and Times Adjustments:*

1. The Contract Price or the Contract Times, or both, will be equitably adjusted to the extent that the existence of such differing subsurface or physical condition causes an increase or decrease in Contractor's cost of, or time required for, performance of the Work; subject, however, to the following:

   a. such condition must meet any one or more of the categories described in Paragraph 4.03.A; and

   b. with respect to Work that is paid for on a unit price basis, any adjustment in Contract Price will be subject to the provisions of Paragraphs 9.07 and 11.03.

2. Contractor shall not be entitled to any adjustment in the Contract Price or Contract Times if:

   a. Contractor knew of the existence of such conditions at the time Contractor made a final commitment to Owner with respect to Contract Price and Contract Times by the submission of a Bid or becoming bound under a negotiated contract; or

   b. the existence of such condition could reasonably have been discovered or revealed as a result of any examination, investigation, exploration, test, or study of the Site and

Copyright © 2007 National Society of Professional Engineers for EJCDC. All rights reserved.

contiguous areas required by the Bidding Requirements or Contract Documents to be conducted by or for Contractor prior to Contractor's making such final commitment; or

c. Contractor failed to give the written notice as required by Paragraph 4.03.A.

3. If Owner and Contractor are unable to agree on entitlement to or on the amount or extent, if any, of any adjustment in the Contract Price or Contract Times, or both, a Claim may be made therefor as provided in Paragraph 10.05. However, neither Owner or Engineer, or any of their officers, directors, members, partners, employees, agents, consultants, or subcontractors shall be liable to Contractor for any claims, costs, losses, or damages (including but not limited to all fees and charges of engineers, architects, attorneys, and other professionals and all court or arbitration or other dispute resolution costs) sustained by Contractor on or in connection with any other project or anticipated project.

4.04 *Underground Facilities*

A. *Shown or Indicated:* The information and data shown or indicated in the Contract Documents with respect to existing Underground Facilities at or contiguous to the Site is based on information and data furnished to Owner or Engineer by the owners of such Underground Facilities, including Owner, or by others. Unless it is otherwise expressly provided in the Supplementary Conditions:

1. Owner and Engineer shall not be responsible for the accuracy or completeness of any such information or data provided by others; and

2. the cost of all of the following will be included in the Contract Price, and Contractor shall have full responsibility for:

a. reviewing and checking all such information and data;

b. locating all Underground Facilities shown or indicated in the Contract Documents;

c. coordination of the Work with the owners of such Underground Facilities, including Owner, during construction; and

d. the safety and protection of all such Underground Facilities and repairing any damage thereto resulting from the Work.

B. *Not Shown or Indicated:*

1. If an Underground Facility is uncovered or revealed at or contiguous to the Site which was not shown or indicated, or not shown or indicated with reasonable accuracy in the Contract Documents, Contractor shall, promptly after becoming aware thereof and before further disturbing conditions affected thereby or performing any Work in connection therewith (except in an emergency as required by Paragraph 6.16.A), identify the owner of such Underground Facility and give written notice to that owner and to Owner and Engineer. Engineer will promptly review the Underground Facility and determine the extent, if any, to which a change is required in the Contract Documents to reflect and document the

Copyright © 2007 National Society of Professional Engineers for EJCDC. All rights reserved.

consequences of the existence or location of the Underground Facility. During such time, Contractor shall be responsible for the safety and protection of such Underground Facility.

2. If Engineer concludes that a change in the Contract Documents is required, a Work Change Directive or a Change Order will be issued to reflect and document such consequences. An equitable adjustment shall be made in the Contract Price or Contract Times, or both, to the extent that they are attributable to the existence or location of any Underground Facility that was not shown or indicated or not shown or indicated with reasonable accuracy in the Contract Documents and that Contractor did not know of and could not reasonably have been expected to be aware of or to have anticipated. If Owner and Contractor are unable to agree on entitlement to or on the amount or extent, if any, of any such adjustment in Contract Price or Contract Times, Owner or Contractor may make a Claim therefor as provided in Paragraph 10.05.

4.05 *Reference Points*

A. Owner shall provide engineering surveys to establish reference points for construction which in Engineer's judgment are necessary to enable Contractor to proceed with the Work. Contractor shall be responsible for laying out the Work, shall protect and preserve the established reference points and property monuments, and shall make no changes or relocations without the prior written approval of Owner. Contractor shall report to Engineer whenever any reference point or property monument is lost or destroyed or requires relocation because of necessary changes in grades or locations, and shall be responsible for the accurate replacement or relocation of such reference points or property monuments by professionally qualified personnel.

4.06 *Hazardous Environmental Condition at Site*

A. *Reports and Drawings:* The Supplementary Conditions identify those reports and drawings known to Owner relating to Hazardous Environmental Conditions that have been identified at the Site.

B. *Limited Reliance by Contractor on Technical Data Authorized:* Contractor may rely upon the accuracy of the "technical data" contained in such reports and drawings, but such reports and drawings are not Contract Documents. Such "technical data" is identified in the Supplementary Conditions. Except for such reliance on such "technical data," Contractor may not rely upon or make any claim against Owner or Engineer, or any of their officers, directors, members, partners, employees, agents, consultants, or subcontractors with respect to:

1. the completeness of such reports and drawings for Contractor's purposes, including, but not limited to, any aspects of the means, methods, techniques, sequences and procedures of construction to be employed by Contractor and safety precautions and programs incident thereto; or

2. other data, interpretations, opinions and information contained in such reports or shown or indicated in such drawings; or

3. any Contractor interpretation of or conclusion drawn from any "technical data" or any such other data, interpretations, opinions or information.

Copyright © 2007 National Society of Professional Engineers for EJCDC. All rights reserved.

C. Contractor shall not be responsible for any Hazardous Environmental Condition uncovered or revealed at the Site which was not shown or indicated in Drawings or Specifications or identified in the Contract Documents to be within the scope of the Work. Contractor shall be responsible for a Hazardous Environmental Condition created with any materials brought to the Site by Contractor, Subcontractors, Suppliers, or anyone else for whom Contractor is responsible.

D. If Contractor encounters a Hazardous Environmental Condition or if Contractor or anyone for whom Contractor is responsible creates a Hazardous Environmental Condition, Contractor shall immediately: (i) secure or otherwise isolate such condition; (ii) stop all Work in connection with such condition and in any area affected thereby (except in an emergency as required by Paragraph 6.16.A); and (iii) notify Owner and Engineer (and promptly thereafter confirm such notice in writing). Owner shall promptly consult with Engineer concerning the necessity for Owner to retain a qualified expert to evaluate such condition or take corrective action, if any. Promptly after consulting with Engineer, Owner shall take such actions as are necessary to permit Owner to timely obtain required permits and provide Contractor the written notice required by Paragraph 4.06.E.

E. Contractor shall not be required to resume Work in connection with such condition or in any affected area until after Owner has obtained any required permits related thereto and delivered written notice to Contractor: (i) specifying that such condition and any affected area is or has been rendered safe for the resumption of Work; or (ii) specifying any special conditions under which such Work may be resumed safely. If Owner and Contractor cannot agree as to entitlement to or on the amount or extent, if any, of any adjustment in Contract Price or Contract Times, or both, as a result of such Work stoppage or such special conditions under which Work is agreed to be resumed by Contractor, either party may make a Claim therefor as provided in Paragraph 10.05.

F. If after receipt of such written notice Contractor does not agree to resume such Work based on a reasonable belief it is unsafe, or does not agree to resume such Work under such special conditions, then Owner may order the portion of the Work that is in the area affected by such condition to be deleted from the Work. If Owner and Contractor cannot agree as to entitlement to or on the amount or extent, if any, of an adjustment in Contract Price or Contract Times as a result of deleting such portion of the Work, then either party may make a Claim therefor as provided in Paragraph 10.05. Owner may have such deleted portion of the Work performed by Owner's own forces or others in accordance with Article 7.

G. To the fullest extent permitted by Laws and Regulations, Owner shall indemnify and hold harmless Contractor, Subcontractors, and Engineer, and the officers, directors, members, partners, employees, agents, consultants, and subcontractors of each and any of them from and against all claims, costs, losses, and damages (including but not limited to all fees and charges of engineers, architects, attorneys, and other professionals and all court or arbitration or other dispute resolution costs) arising out of or relating to a Hazardous Environmental Condition, provided that such Hazardous Environmental Condition: (i) was not shown or indicated in the Drawings or Specifications or identified in the Contract Documents to be included within the scope of the Work, and (ii) was not created by Contractor or by anyone for whom Contractor is responsible. Nothing in this Paragraph 4.06.G shall obligate Owner to indemnify any individual or entity from and against the consequences of that individual's or entity's own negligence.

Copyright © 2007 National Society of Professional Engineers for EJCDC. All rights reserved.

H. To the fullest extent permitted by Laws and Regulations, Contractor shall indemnify and hold harmless Owner and Engineer, and the officers, directors, members, partners, employees, agents, consultants, and subcontractors of each and any of them from and against all claims, costs, losses, and damages (including but not limited to all fees and charges of engineers, architects, attorneys, and other professionals and all court or arbitration or other dispute resolution costs) arising out of or relating to a Hazardous Environmental Condition created by Contractor or by anyone for whom Contractor is responsible. Nothing in this Paragraph 4.06.H shall obligate Contractor to indemnify any individual or entity from and against the consequences of that individual's or entity's own negligence.

I. The provisions of Paragraphs 4.02, 4.03, and 4.04 do not apply to a Hazardous Environmental Condition uncovered or revealed at the Site.

ARTICLE 5 – BONDS AND INSURANCE

5.01 *Performance, Payment, and Other Bonds*

A. Contractor shall furnish performance and payment bonds, each in an amount at least equal to the Contract Price as security for the faithful performance and payment of all of Contractor's obligations under the Contract Documents. These bonds shall remain in effect until one year after the date when final payment becomes due or until completion of the correction period specified in Paragraph 13.07, whichever is later, except as provided otherwise by Laws or Regulations or by the Contract Documents. Contractor shall also furnish such other bonds as are required by the Contract Documents.

B. All bonds shall be in the form prescribed by the Contract Documents except as provided otherwise by Laws or Regulations, and shall be executed by such sureties as are named in the list of "Companies Holding Certificates of Authority as Acceptable Sureties on Federal Bonds and as Acceptable Reinsuring Companies" as published in Circular 570 (amended) by the Financial Management Service, Surety Bond Branch, U.S. Department of the Treasury. All bonds signed by an agent or attorney-in-fact must be accompanied by a certified copy of that individual's authority to bind the surety. The evidence of authority shall show that it is effective on the date the agent or attorney-in-fact signed each bond.

C. If the surety on any bond furnished by Contractor is declared bankrupt or becomes insolvent or its right to do business is terminated in any state where any part of the Project is located or it ceases to meet the requirements of Paragraph 5.01.B, Contractor shall promptly notify Owner and Engineer and shall, within 20 days after the event giving rise to such notification, provide another bond and surety, both of which shall comply with the requirements of Paragraphs 5.01.B and 5.02.

5.02 *Licensed Sureties and Insurers*

A. All bonds and insurance required by the Contract Documents to be purchased and maintained by Owner or Contractor shall be obtained from surety or insurance companies that are duly licensed or authorized in the jurisdiction in which the Project is located to issue bonds or insurance policies for the limits and coverages so required. Such surety and insurance companies shall also

Copyright © 2007 National Society of Professional Engineers for EJCDC. All rights reserved.

meet such additional requirements and qualifications as may be provided in the Supplementary Conditions.

5.03 *Certificates of Insurance*

A. Contractor shall deliver to Owner, with copies to each additional insured and loss payee identified in the Supplementary Conditions, certificates of insurance (and other evidence of insurance requested by Owner or any other additional insured) which Contractor is required to purchase and maintain.

B. Owner shall deliver to Contractor, with copies to each additional insured and loss payee identified in the Supplementary Conditions, certificates of insurance (and other evidence of insurance requested by Contractor or any other additional insured) which Owner is required to purchase and maintain.

C. Failure of Owner to demand such certificates or other evidence of Contractor's full compliance with these insurance requirements or failure of Owner to identify a deficiency in compliance from the evidence provided shall not be construed as a waiver of Contractor's obligation to maintain such insurance.

D. Owner does not represent that insurance coverage and limits established in this Contract necessarily will be adequate to protect Contractor.

E. The insurance and insurance limits required herein shall not be deemed as a limitation on Contractor's liability under the indemnities granted to Owner in the Contract Documents.

5.04 *Contractor's Insurance*

A. Contractor shall purchase and maintain such insurance as is appropriate for the Work being performed and as will provide protection from claims set forth below which may arise out of or result from Contractor's performance of the Work and Contractor's other obligations under the Contract Documents, whether it is to be performed by Contractor, any Subcontractor or Supplier, or by anyone directly or indirectly employed by any of them to perform any of the Work, or by anyone for whose acts any of them may be liable:

1. claims under workers' compensation, disability benefits, and other similar employee benefit acts;

2. claims for damages because of bodily injury, occupational sickness or disease, or death of Contractor's employees;

3. claims for damages because of bodily injury, sickness or disease, or death of any person other than Contractor's employees;

4. claims for damages insured by reasonably available personal injury liability coverage which are sustained:

Copyright © 2007 National Society of Professional Engineers for EJCDC. All rights reserved.

a. by any person as a result of an offense directly or indirectly related to the employment of such person by Contractor, or

b. by any other person for any other reason;

5. claims for damages, other than to the Work itself, because of injury to or destruction of tangible property wherever located, including loss of use resulting therefrom; and

6. claims for damages because of bodily injury or death of any person or property damage arising out of the ownership, maintenance or use of any motor vehicle.

B. The policies of insurance required by this Paragraph 5.04 shall:

1. with respect to insurance required by Paragraphs 5.04.A.3 through 5.04.A.6 inclusive, be written on an occurrence basis, include as additional insureds (subject to any customary exclusion regarding professional liability) Owner and Engineer, and any other individuals or entities identified in the Supplementary Conditions, all of whom shall be listed as additional insureds, and include coverage for the respective officers, directors, members, partners, employees, agents, consultants, and subcontractors of each and any of all such additional insureds, and the insurance afforded to these additional insureds shall provide primary coverage for all claims covered thereby;

2. include at least the specific coverages and be written for not less than the limits of liability provided in the Supplementary Conditions or required by Laws or Regulations, whichever is greater;

3. include contractual liability insurance covering Contractor's indemnity obligations under Paragraphs 6.11 and 6.20;

4. contain a provision or endorsement that the coverage afforded will not be canceled, materially changed or renewal refused until at least 30 days prior written notice has been given to Owner and Contractor and to each other additional insured identified in the Supplementary Conditions to whom a certificate of insurance has been issued (and the certificates of insurance furnished by the Contractor pursuant to Paragraph 5.03 will so provide);

5. remain in effect at least until final payment and at all times thereafter when Contractor may be correcting, removing, or replacing defective Work in accordance with Paragraph 13.07; and

6. include completed operations coverage:

a. Such insurance shall remain in effect for two years after final payment.

b. Contractor shall furnish Owner and each other additional insured identified in the Supplementary Conditions, to whom a certificate of insurance has been issued, evidence satisfactory to Owner and any such additional insured of continuation of such insurance at final payment and one year thereafter.

Copyright © 2007 National Society of Professional Engineers for EJCDC. All rights reserved.

5.05 *Owner's Liability Insurance*

A. In addition to the insurance required to be provided by Contractor under Paragraph 5.04, Owner, at Owner's option, may purchase and maintain at Owner's expense Owner's own liability insurance as will protect Owner against claims which may arise from operations under the Contract Documents.

5.06 *Property Insurance*

A. Unless otherwise provided in the Supplementary Conditions, Owner shall purchase and maintain property insurance upon the Work at the Site in the amount of the full replacement cost thereof (subject to such deductible amounts as may be provided in the Supplementary Conditions or required by Laws and Regulations). This insurance shall:

1. include the interests of Owner, Contractor, Subcontractors, and Engineer, and any other individuals or entities identified in the Supplementary Conditions, and the officers, directors, members, partners, employees, agents, consultants, and subcontractors of each and any of them, each of whom is deemed to have an insurable interest and shall be listed as a loss payee;

2. be written on a Builder's Risk "all-risk" policy form that shall at least include insurance for physical loss or damage to the Work, temporary buildings, falsework, and materials and equipment in transit, and shall insure against at least the following perils or causes of loss: fire, lightning, extended coverage, theft, vandalism and malicious mischief, earthquake, collapse, debris removal, demolition occasioned by enforcement of Laws and Regulations, water damage (other than that caused by flood), and such other perils or causes of loss as may be specifically required by the Supplementary Conditions.

3. include expenses incurred in the repair or replacement of any insured property (including but not limited to fees and charges of engineers and architects);

4. cover materials and equipment stored at the Site or at another location that was agreed to in writing by Owner prior to being incorporated in the Work, provided that such materials and equipment have been included in an Application for Payment recommended by Engineer;

5. allow for partial utilization of the Work by Owner;

6. include testing and startup; and

7. be maintained in effect until final payment is made unless otherwise agreed to in writing by Owner, Contractor, and Engineer with 30 days written notice to each other loss payee to whom a certificate of insurance has been issued.

B. Owner shall purchase and maintain such equipment breakdown insurance or additional property insurance as may be required by the Supplementary Conditions or Laws and Regulations which will include the interests of Owner, Contractor, Subcontractors, and Engineer, and any other individuals or entities identified in the Supplementary Conditions, and the officers, directors,

Copyright © 2007 National Society of Professional Engineers for EJCDC. All rights reserved.

members, partners, employees, agents, consultants and subcontractors of each and any of them, each of whom is deemed to have an insurable interest and shall be listed as a loss payee.

C. All the policies of insurance (and the certificates or other evidence thereof) required to be purchased and maintained in accordance with this Paragraph 5.06 will contain a provision or endorsement that the coverage afforded will not be canceled or materially changed or renewal refused until at least 30 days prior written notice has been given to Owner and Contractor and to each other loss payee to whom a certificate of insurance has been issued and will contain waiver provisions in accordance with Paragraph 5.07.

D. Owner shall not be responsible for purchasing and maintaining any property insurance specified in this Paragraph 5.06 to protect the interests of Contractor, Subcontractors, or others in the Work to the extent of any deductible amounts that are identified in the Supplementary Conditions. The risk of loss within such identified deductible amount will be borne by Contractor, Subcontractors, or others suffering any such loss, and if any of them wishes property insurance coverage within the limits of such amounts, each may purchase and maintain it at the purchaser's own expense.

E. If Contractor requests in writing that other special insurance be included in the property insurance policies provided under this Paragraph 5.06, Owner shall, if possible, include such insurance, and the cost thereof will be charged to Contractor by appropriate Change Order. Prior to commencement of the Work at the Site, Owner shall in writing advise Contractor whether or not such other insurance has been procured by Owner.

5.07 *Waiver of Rights*

A. Owner and Contractor intend that all policies purchased in accordance with Paragraph 5.06 will protect Owner, Contractor, Subcontractors, and Engineer, and all other individuals or entities identified in the Supplementary Conditions as loss payees (and the officers, directors, members, partners, employees, agents, consultants, and subcontractors of each and any of them) in such policies and will provide primary coverage for all losses and damages caused by the perils or causes of loss covered thereby. All such policies shall contain provisions to the effect that in the event of payment of any loss or damage the insurers will have no rights of recovery against any of the insureds or loss payees thereunder. Owner and Contractor waive all rights against each other and their respective officers, directors, members, partners, employees, agents, consultants and subcontractors of each and any of them for all losses and damages caused by, arising out of or resulting from any of the perils or causes of loss covered by such policies and any other property insurance applicable to the Work; and, in addition, waive all such rights against Subcontractors and Engineer, and all other individuals or entities identified in the Supplementary Conditions as loss payees (and the officers, directors, members, partners, employees, agents, consultants, and subcontractors of each and any of them) under such policies for losses and damages so caused. None of the above waivers shall extend to the rights that any party making such waiver may have to the proceeds of insurance held by Owner as trustee or otherwise payable under any policy so issued.

B. Owner waives all rights against Contractor, Subcontractors, and Engineer, and the officers, directors, members, partners, employees, agents, consultants and subcontractors of each and any of them for:

Copyright © 2007 National Society of Professional Engineers for EJCDC. All rights reserved.

1. loss due to business interruption, loss of use, or other consequential loss extending beyond direct physical loss or damage to Owner's property or the Work caused by, arising out of, or resulting from fire or other perils whether or not insured by Owner; and

2. loss or damage to the completed Project or part thereof caused by, arising out of, or resulting from fire or other insured peril or cause of loss covered by any property insurance maintained on the completed Project or part thereof by Owner during partial utilization pursuant to Paragraph 14.05, after Substantial Completion pursuant to Paragraph 14.04, or after final payment pursuant to Paragraph 14.07.

C. Any insurance policy maintained by Owner covering any loss, damage or consequential loss referred to in Paragraph 5.07.B shall contain provisions to the effect that in the event of payment of any such loss, damage, or consequential loss, the insurers will have no rights of recovery against Contractor, Subcontractors, or Engineer, and the officers, directors, members, partners, employees, agents, consultants and subcontractors of each and any of them.

5.08 *Receipt and Application of Insurance Proceeds*

A. Any insured loss under the policies of insurance required by Paragraph 5.06 will be adjusted with Owner and made payable to Owner as fiduciary for the loss payees, as their interests may appear, subject to the requirements of any applicable mortgage clause and of Paragraph 5.08.B. Owner shall deposit in a separate account any money so received and shall distribute it in accordance with such agreement as the parties in interest may reach. If no other special agreement is reached, the damaged Work shall be repaired or replaced, the moneys so received applied on account thereof, and the Work and the cost thereof covered by an appropriate Change Order.

B. Owner as fiduciary shall have power to adjust and settle any loss with the insurers unless one of the parties in interest shall object in writing within 15 days after the occurrence of loss to Owner's exercise of this power. If such objection be made, Owner as fiduciary shall make settlement with the insurers in accordance with such agreement as the parties in interest may reach. If no such agreement among the parties in interest is reached, Owner as fiduciary shall adjust and settle the loss with the insurers and, if required in writing by any party in interest, Owner as fiduciary shall give bond for the proper performance of such duties.

5.09 *Acceptance of Bonds and Insurance; Option to Replace*

A. If either Owner or Contractor has any objection to the coverage afforded by or other provisions of the bonds or insurance required to be purchased and maintained by the other party in accordance with Article 5 on the basis of non-conformance with the Contract Documents, the objecting party shall so notify the other party in writing within 10 days after receipt of the certificates (or other evidence requested) required by Paragraph 2.01.B. Owner and Contractor shall each provide to the other such additional information in respect of insurance provided as the other may reasonably request. If either party does not purchase or maintain all of the bonds and insurance required of such party by the Contract Documents, such party shall notify the other party in writing of such failure to purchase prior to the start of the Work, or of such failure to maintain prior to any change in the required coverage. Without prejudice to any other right or remedy, the other party may elect to obtain equivalent bonds or insurance to protect such other party's

Copyright © 2007 National Society of Professional Engineers for EJCDC. All rights reserved.

interests at the expense of the party who was required to provide such coverage, and a Change Order shall be issued to adjust the Contract Price accordingly.

5.10 *Partial Utilization, Acknowledgment of Property Insurer*

A. If Owner finds it necessary to occupy or use a portion or portions of the Work prior to Substantial Completion of all the Work as provided in Paragraph 14.05, no such use or occupancy shall commence before the insurers providing the property insurance pursuant to Paragraph 5.06 have acknowledged notice thereof and in writing effected any changes in coverage necessitated thereby. The insurers providing the property insurance shall consent by endorsement on the policy or policies, but the property insurance shall not be canceled or permitted to lapse on account of any such partial use or occupancy.

ARTICLE 6 – CONTRACTOR'S RESPONSIBILITIES

6.01 *Supervision and Superintendence*

A. Contractor shall supervise, inspect, and direct the Work competently and efficiently, devoting such attention thereto and applying such skills and expertise as may be necessary to perform the Work in accordance with the Contract Documents. Contractor shall be solely responsible for the means, methods, techniques, sequences, and procedures of construction. Contractor shall not be responsible for the negligence of Owner or Engineer in the design or specification of a specific means, method, technique, sequence, or procedure of construction which is shown or indicated in and expressly required by the Contract Documents.

B. At all times during the progress of the Work, Contractor shall assign a competent resident superintendent who shall not be replaced without written notice to Owner and Engineer except under extraordinary circumstances.

6.02 *Labor; Working Hours*

A. Contractor shall provide competent, suitably qualified personnel to survey and lay out the Work and perform construction as required by the Contract Documents. Contractor shall at all times maintain good discipline and order at the Site.

B. Except as otherwise required for the safety or protection of persons or the Work or property at the Site or adjacent thereto, and except as otherwise stated in the Contract Documents, all Work at the Site shall be performed during regular working hours. Contractor will not permit the performance of Work on a Saturday, Sunday, or any legal holiday without Owner's written consent (which will not be unreasonably withheld) given after prior written notice to Engineer.

6.03 *Services, Materials, and Equipment*

A. Unless otherwise specified in the Contract Documents, Contractor shall provide and assume full responsibility for all services, materials, equipment, labor, transportation, construction equipment and machinery, tools, appliances, fuel, power, light, heat, telephone, water, sanitary facilities, temporary facilities, and all other facilities and incidentals necessary for the performance, testing, start-up, and completion of the Work.

Copyright © 2007 National Society of Professional Engineers for EJCDC. All rights reserved.

B. All materials and equipment incorporated into the Work shall be as specified or, if not specified, shall be of good quality and new, except as otherwise provided in the Contract Documents. All special warranties and guarantees required by the Specifications shall expressly run to the benefit of Owner. If required by Engineer, Contractor shall furnish satisfactory evidence (including reports of required tests) as to the source, kind, and quality of materials and equipment.

C. All materials and equipment shall be stored, applied, installed, connected, erected, protected, used, cleaned, and conditioned in accordance with instructions of the applicable Supplier, except as otherwise may be provided in the Contract Documents.

6.04 *Progress Schedule*

A. Contractor shall adhere to the Progress Schedule established in accordance with Paragraph 2.07 as it may be adjusted from time to time as provided below.

1. Contractor shall submit to Engineer for acceptance (to the extent indicated in Paragraph 2.07) proposed adjustments in the Progress Schedule that will not result in changing the Contract Times. Such adjustments will comply with any provisions of the General Requirements applicable thereto.

2. Proposed adjustments in the Progress Schedule that will change the Contract Times shall be submitted in accordance with the requirements of Article 12. Adjustments in Contract Times may only be made by a Change Order.

6.05 *Substitutes and "Or-Equals"*

A. Whenever an item of material or equipment is specified or described in the Contract Documents by using the name of a proprietary item or the name of a particular Supplier, the specification or description is intended to establish the type, function, appearance, and quality required. Unless the specification or description contains or is followed by words reading that no like, equivalent, or "or-equal" item or no substitution is permitted, other items of material or equipment or material or equipment of other Suppliers may be submitted to Engineer for review under the circumstances described below.

1. *"Or-Equal" Items:* If in Engineer's sole discretion an item of material or equipment proposed by Contractor is functionally equal to that named and sufficiently similar so that no change in related Work will be required, it may be considered by Engineer as an "or-equal" item, in which case review and approval of the proposed item may, in Engineer's sole discretion, be accomplished without compliance with some or all of the requirements for approval of proposed substitute items. For the purposes of this Paragraph 6.05.A.1, a proposed item of material or equipment will be considered functionally equal to an item so named if:

a. in the exercise of reasonable judgment Engineer determines that:

1) it is at least equal in materials of construction, quality, durability, appearance, strength, and design characteristics;

Copyright © 2007 National Society of Professional Engineers for EJCDC. All rights reserved.

2) it will reliably perform at least equally well the function and achieve the results imposed by the design concept of the completed Project as a functioning whole; and

3) it has a proven record of performance and availability of responsive service.

b. Contractor certifies that, if approved and incorporated into the Work:

1) there will be no increase in cost to the Owner or increase in Contract Times; and

2) it will conform substantially to the detailed requirements of the item named in the Contract Documents.

2. *Substitute Items:*

a. If in Engineer's sole discretion an item of material or equipment proposed by Contractor does not qualify as an "or-equal" item under Paragraph 6.05.A.1, it will be considered a proposed substitute item.

b. Contractor shall submit sufficient information as provided below to allow Engineer to determine if the item of material or equipment proposed is essentially equivalent to that named and an acceptable substitute therefor. Requests for review of proposed substitute items of material or equipment will not be accepted by Engineer from anyone other than Contractor.

c. The requirements for review by Engineer will be as set forth in Paragraph 6.05.A.2.d, as supplemented by the General Requirements, and as Engineer may decide is appropriate under the circumstances.

d. Contractor shall make written application to Engineer for review of a proposed substitute item of material or equipment that Contractor seeks to furnish or use. The application:

1) shall certify that the proposed substitute item will:

a) perform adequately the functions and achieve the results called for by the general design,

b) be similar in substance to that specified, and

c) be suited to the same use as that specified;

2) will state:

a) the extent, if any, to which the use of the proposed substitute item will prejudice Contractor's achievement of Substantial Completion on time,

b) whether use of the proposed substitute item in the Work will require a change in any of the Contract Documents (or in the provisions of any other direct contract with Owner for other work on the Project) to adapt the design to the proposed substitute item, and

Copyright © 2007 National Society of Professional Engineers for EJCDC. All rights reserved.

c) whether incorporation or use of the proposed substitute item in connection with the Work is subject to payment of any license fee or royalty;

3) will identify:

a) all variations of the proposed substitute item from that specified, and

b) available engineering, sales, maintenance, repair, and replacement services; and

4) shall contain an itemized estimate of all costs or credits that will result directly or indirectly from use of such substitute item, including costs of redesign and claims of other contractors affected by any resulting change.

B. *Substitute Construction Methods or Procedures:* If a specific means, method, technique, sequence, or procedure of construction is expressly required by the Contract Documents, Contractor may furnish or utilize a substitute means, method, technique, sequence, or procedure of construction approved by Engineer. Contractor shall submit sufficient information to allow Engineer, in Engineer's sole discretion, to determine that the substitute proposed is equivalent to that expressly called for by the Contract Documents. The requirements for review by Engineer will be similar to those provided in Paragraph 6.05.A.2.

C. *Engineer's Evaluation:* Engineer will be allowed a reasonable time within which to evaluate each proposal or submittal made pursuant to Paragraphs 6.05.A and 6.05.B. Engineer may require Contractor to furnish additional data about the proposed substitute item. Engineer will be the sole judge of acceptability. No "or equal" or substitute will be ordered, installed or utilized until Engineer's review is complete, which will be evidenced by a Change Order in the case of a substitute and an approved Shop Drawing for an "or equal." Engineer will advise Contractor in writing of any negative determination.

D. *Special Guarantee:* Owner may require Contractor to furnish at Contractor's expense a special performance guarantee or other surety with respect to any substitute.

E. *Engineer's Cost Reimbursement*: Engineer will record Engineer's costs in evaluating a substitute proposed or submitted by Contractor pursuant to Paragraphs 6.05.A.2 and 6.05.B. Whether or not Engineer approves a substitute so proposed or submitted by Contractor, Contractor shall reimburse Owner for the reasonable charges of Engineer for evaluating each such proposed substitute. Contractor shall also reimburse Owner for the reasonable charges of Engineer for making changes in the Contract Documents (or in the provisions of any other direct contract with Owner) resulting from the acceptance of each proposed substitute.

F. *Contractor's Expense*: Contractor shall provide all data in support of any proposed substitute or "or-equal" at Contractor's expense.

6.06 *Concerning Subcontractors, Suppliers, and Others*

A. Contractor shall not employ any Subcontractor, Supplier, or other individual or entity (including those acceptable to Owner as indicated in Paragraph 6.06.B), whether initially or as a replacement, against whom Owner may have reasonable objection. Contractor shall not be

Copyright © 2007 National Society of Professional Engineers for EJCDC. All rights reserved.

required to employ any Subcontractor, Supplier, or other individual or entity to furnish or perform any of the Work against whom Contractor has reasonable objection.

B. If the Supplementary Conditions require the identity of certain Subcontractors, Suppliers, or other individuals or entities to be submitted to Owner in advance for acceptance by Owner by a specified date prior to the Effective Date of the Agreement, and if Contractor has submitted a list thereof in accordance with the Supplementary Conditions, Owner's acceptance (either in writing or by failing to make written objection thereto by the date indicated for acceptance or objection in the Bidding Documents or the Contract Documents) of any such Subcontractor, Supplier, or other individual or entity so identified may be revoked on the basis of reasonable objection after due investigation. Contractor shall submit an acceptable replacement for the rejected Subcontractor, Supplier, or other individual or entity, and the Contract Price will be adjusted by the difference in the cost occasioned by such replacement, and an appropriate Change Order will be issued. No acceptance by Owner of any such Subcontractor, Supplier, or other individual or entity, whether initially or as a replacement, shall constitute a waiver of any right of Owner or Engineer to reject defective Work.

C. Contractor shall be fully responsible to Owner and Engineer for all acts and omissions of the Subcontractors, Suppliers, and other individuals or entities performing or furnishing any of the Work just as Contractor is responsible for Contractor's own acts and omissions. Nothing in the Contract Documents:

1. shall create for the benefit of any such Subcontractor, Supplier, or other individual or entity any contractual relationship between Owner or Engineer and any such Subcontractor, Supplier or other individual or entity; nor

2. shall create any obligation on the part of Owner or Engineer to pay or to see to the payment of any moneys due any such Subcontractor, Supplier, or other individual or entity except as may otherwise be required by Laws and Regulations.

D. Contractor shall be solely responsible for scheduling and coordinating the Work of Subcontractors, Suppliers, and other individuals or entities performing or furnishing any of the Work under a direct or indirect contract with Contractor.

E. Contractor shall require all Subcontractors, Suppliers, and such other individuals or entities performing or furnishing any of the Work to communicate with Engineer through Contractor.

F. The divisions and sections of the Specifications and the identifications of any Drawings shall not control Contractor in dividing the Work among Subcontractors or Suppliers or delineating the Work to be performed by any specific trade.

G. All Work performed for Contractor by a Subcontractor or Supplier will be pursuant to an appropriate agreement between Contractor and the Subcontractor or Supplier which specifically binds the Subcontractor or Supplier to the applicable terms and conditions of the Contract Documents for the benefit of Owner and Engineer. Whenever any such agreement is with a Subcontractor or Supplier who is listed as a loss payee on the property insurance provided in Paragraph 5.06, the agreement between the Contractor and the Subcontractor or Supplier will contain provisions whereby the Subcontractor or Supplier waives all rights against Owner,

Copyright © 2007 National Society of Professional Engineers for EJCDC. All rights reserved.

Contractor, Engineer, and all other individuals or entities identified in the Supplementary Conditions to be listed as insureds or loss payees (and the officers, directors, members, partners, employees, agents, consultants, and subcontractors of each and any of them) for all losses and damages caused by, arising out of, relating to, or resulting from any of the perils or causes of loss covered by such policies and any other property insurance applicable to the Work. If the insurers on any such policies require separate waiver forms to be signed by any Subcontractor or Supplier, Contractor will obtain the same.

6.07 *Patent Fees and Royalties*

A. Contractor shall pay all license fees and royalties and assume all costs incident to the use in the performance of the Work or the incorporation in the Work of any invention, design, process, product, or device which is the subject of patent rights or copyrights held by others. If a particular invention, design, process, product, or device is specified in the Contract Documents for use in the performance of the Work and if, to the actual knowledge of Owner or Engineer, its use is subject to patent rights or copyrights calling for the payment of any license fee or royalty to others, the existence of such rights shall be disclosed by Owner in the Contract Documents.

B. To the fullest extent permitted by Laws and Regulations, Owner shall indemnify and hold harmless Contractor, and its officers, directors, members, partners, employees, agents, consultants, and subcontractors from and against all claims, costs, losses, and damages (including but not limited to all fees and charges of engineers, architects, attorneys, and other professionals, and all court or arbitration or other dispute resolution costs) arising out of or relating to any infringement of patent rights or copyrights incident to the use in the performance of the Work or resulting from the incorporation in the Work of any invention, design, process, product, or device specified in the Contract Documents, but not identified as being subject to payment of any license fee or royalty to others required by patent rights or copyrights.

C. To the fullest extent permitted by Laws and Regulations, Contractor shall indemnify and hold harmless Owner and Engineer, and the officers, directors, members, partners, employees, agents, consultants and subcontractors of each and any of them from and against all claims, costs, losses, and damages (including but not limited to all fees and charges of engineers, architects, attorneys, and other professionals and all court or arbitration or other dispute resolution costs) arising out of or relating to any infringement of patent rights or copyrights incident to the use in the performance of the Work or resulting from the incorporation in the Work of any invention, design, process, product, or device not specified in the Contract Documents.

6.08 *Permits*

A. Unless otherwise provided in the Supplementary Conditions, Contractor shall obtain and pay for all construction permits and licenses. Owner shall assist Contractor, when necessary, in obtaining such permits and licenses. Contractor shall pay all governmental charges and inspection fees necessary for the prosecution of the Work which are applicable at the time of opening of Bids, or, if there are no Bids, on the Effective Date of the Agreement. Owner shall pay all charges of utility owners for connections for providing permanent service to the Work.

Copyright © 2007 National Society of Professional Engineers for EJCDC. All rights reserved.

6.09 *Laws and Regulations*

A. Contractor shall give all notices required by and shall comply with all Laws and Regulations applicable to the performance of the Work. Except where otherwise expressly required by applicable Laws and Regulations, neither Owner nor Engineer shall be responsible for monitoring Contractor's compliance with any Laws or Regulations.

B. If Contractor performs any Work knowing or having reason to know that it is contrary to Laws or Regulations, Contractor shall bear all claims, costs, losses, and damages (including but not limited to all fees and charges of engineers, architects, attorneys, and other professionals and all court or arbitration or other dispute resolution costs) arising out of or relating to such Work. However, it shall not be Contractor's responsibility to make certain that the Specifications and Drawings are in accordance with Laws and Regulations, but this shall not relieve Contractor of Contractor's obligations under Paragraph 3.03.

C. Changes in Laws or Regulations not known at the time of opening of Bids (or, on the Effective Date of the Agreement if there were no Bids) having an effect on the cost or time of performance of the Work shall be the subject of an adjustment in Contract Price or Contract Times. If Owner and Contractor are unable to agree on entitlement to or on the amount or extent, if any, of any such adjustment, a Claim may be made therefor as provided in Paragraph 10.05.

6.10 *Taxes*

A. Contractor shall pay all sales, consumer, use, and other similar taxes required to be paid by Contractor in accordance with the Laws and Regulations of the place of the Project which are applicable during the performance of the Work.

6.11 *Use of Site and Other Areas*

A. *Limitation on Use of Site and Other Areas:*

1. Contractor shall confine construction equipment, the storage of materials and equipment, and the operations of workers to the Site and other areas permitted by Laws and Regulations, and shall not unreasonably encumber the Site and other areas with construction equipment or other materials or equipment. Contractor shall assume full responsibility for any damage to any such land or area, or to the owner or occupant thereof, or of any adjacent land or areas resulting from the performance of the Work.

2. Should any claim be made by any such owner or occupant because of the performance of the Work, Contractor shall promptly settle with such other party by negotiation or otherwise resolve the claim by arbitration or other dispute resolution proceeding or at law.

3. To the fullest extent permitted by Laws and Regulations, Contractor shall indemnify and hold harmless Owner and Engineer, and the officers, directors, members, partners, employees, agents, consultants and subcontractors of each and any of them from and against all claims, costs, losses, and damages (including but not limited to all fees and charges of engineers, architects, attorneys, and other professionals and all court or arbitration or other dispute resolution costs) arising out of or relating to any claim or action, legal or equitable, brought

Copyright © 2007 National Society of Professional Engineers for EJCDC. All rights reserved.

by any such owner or occupant against Owner, Engineer, or any other party indemnified hereunder to the extent caused by or based upon Contractor's performance of the Work.

B. *Removal of Debris During Performance of the Work:* During the progress of the Work Contractor shall keep the Site and other areas free from accumulations of waste materials, rubbish, and other debris. Removal and disposal of such waste materials, rubbish, and other debris shall conform to applicable Laws and Regulations.

C. *Cleaning:* Prior to Substantial Completion of the Work Contractor shall clean the Site and the Work and make it ready for utilization by Owner. At the completion of the Work Contractor shall remove from the Site all tools, appliances, construction equipment and machinery, and surplus materials and shall restore to original condition all property not designated for alteration by the Contract Documents.

D. *Loading Structures:* Contractor shall not load nor permit any part of any structure to be loaded in any manner that will endanger the structure, nor shall Contractor subject any part of the Work or adjacent property to stresses or pressures that will endanger it.

6.12 *Record Documents*

A. Contractor shall maintain in a safe place at the Site one record copy of all Drawings, Specifications, Addenda, Change Orders, Work Change Directives, Field Orders, and written interpretations and clarifications in good order and annotated to show changes made during construction. These record documents together with all approved Samples and a counterpart of all approved Shop Drawings will be available to Engineer for reference. Upon completion of the Work, these record documents, Samples, and Shop Drawings will be delivered to Engineer for Owner.

6.13 *Safety and Protection*

A. Contractor shall be solely responsible for initiating, maintaining and supervising all safety precautions and programs in connection with the Work. Such responsibility does not relieve Subcontractors of their responsibility for the safety of persons or property in the performance of their work, nor for compliance with applicable safety Laws and Regulations. Contractor shall take all necessary precautions for the safety of, and shall provide the necessary protection to prevent damage, injury or loss to:

1. all persons on the Site or who may be affected by the Work;

2. all the Work and materials and equipment to be incorporated therein, whether in storage on or off the Site; and

3. other property at the Site or adjacent thereto, including trees, shrubs, lawns, walks, pavements, roadways, structures, utilities, and Underground Facilities not designated for removal, relocation, or replacement in the course of construction.

B. Contractor shall comply with all applicable Laws and Regulations relating to the safety of persons or property, or to the protection of persons or property from damage, injury, or loss; and

Copyright © 2007 National Society of Professional Engineers for EJCDC. All rights reserved.

shall erect and maintain all necessary safeguards for such safety and protection. Contractor shall notify owners of adjacent property and of Underground Facilities and other utility owners when prosecution of the Work may affect them, and shall cooperate with them in the protection, removal, relocation, and replacement of their property.

C. Contractor shall comply with the applicable requirements of Owner's safety programs, if any. The Supplementary Conditions identify any Owner's safety programs that are applicable to the Work.

D. Contractor shall inform Owner and Engineer of the specific requirements of Contractor's safety program with which Owner's and Engineer's employees and representatives must comply while at the Site.

E. All damage, injury, or loss to any property referred to in Paragraph 6.13.A.2 or 6.13.A.3 caused, directly or indirectly, in whole or in part, by Contractor, any Subcontractor, Supplier, or any other individual or entity directly or indirectly employed by any of them to perform any of the Work, or anyone for whose acts any of them may be liable, shall be remedied by Contractor (except damage or loss attributable to the fault of Drawings or Specifications or to the acts or omissions of Owner or Engineer or anyone employed by any of them, or anyone for whose acts any of them may be liable, and not attributable, directly or indirectly, in whole or in part, to the fault or negligence of Contractor or any Subcontractor, Supplier, or other individual or entity directly or indirectly employed by any of them).

F. Contractor's duties and responsibilities for safety and for protection of the Work shall continue until such time as all the Work is completed and Engineer has issued a notice to Owner and Contractor in accordance with Paragraph 14.07.B that the Work is acceptable (except as otherwise expressly provided in connection with Substantial Completion).

6.14 *Safety Representative*

A. Contractor shall designate a qualified and experienced safety representative at the Site whose duties and responsibilities shall be the prevention of accidents and the maintaining and supervising of safety precautions and programs.

6.15 *Hazard Communication Programs*

A. Contractor shall be responsible for coordinating any exchange of material safety data sheets or other hazard communication information required to be made available to or exchanged between or among employers at the Site in accordance with Laws or Regulations.

6.16 *Emergencies*

A. In emergencies affecting the safety or protection of persons or the Work or property at the Site or adjacent thereto, Contractor is obligated to act to prevent threatened damage, injury, or loss. Contractor shall give Engineer prompt written notice if Contractor believes that any significant changes in the Work or variations from the Contract Documents have been caused thereby or are required as a result thereof. If Engineer determines that a change in the Contract Documents is

Copyright © 2007 National Society of Professional Engineers for EJCDC. All rights reserved.

required because of the action taken by Contractor in response to such an emergency, a Work Change Directive or Change Order will be issued.

6.17 *Shop Drawings and Samples*

A. Contractor shall submit Shop Drawings and Samples to Engineer for review and approval in accordance with the accepted Schedule of Submittals (as required by Paragraph 2.07). Each submittal will be identified as Engineer may require.

1. *Shop Drawings:*

a. Submit number of copies specified in the General Requirements.

b. Data shown on the Shop Drawings will be complete with respect to quantities, dimensions, specified performance and design criteria, materials, and similar data to show Engineer the services, materials, and equipment Contractor proposes to provide and to enable Engineer to review the information for the limited purposes required by Paragraph 6.17.D.

2. *Samples:*

a. Submit number of Samples specified in the Specifications.

b. Clearly identify each Sample as to material, Supplier, pertinent data such as catalog numbers, the use for which intended and other data as Engineer may require to enable Engineer to review the submittal for the limited purposes required by Paragraph 6.17.D.

B. Where a Shop Drawing or Sample is required by the Contract Documents or the Schedule of Submittals, any related Work performed prior to Engineer's review and approval of the pertinent submittal will be at the sole expense and responsibility of Contractor.

C. *Submittal Procedures:*

1. Before submitting each Shop Drawing or Sample, Contractor shall have:

a. reviewed and coordinated each Shop Drawing or Sample with other Shop Drawings and Samples and with the requirements of the Work and the Contract Documents;

b. determined and verified all field measurements, quantities, dimensions, specified performance and design criteria, installation requirements, materials, catalog numbers, and similar information with respect thereto;

c. determined and verified the suitability of all materials offered with respect to the indicated application, fabrication, shipping, handling, storage, assembly, and installation pertaining to the performance of the Work; and

d. determined and verified all information relative to Contractor's responsibilities for means, methods, techniques, sequences, and procedures of construction, and safety precautions and programs incident thereto.

Copyright © 2007 National Society of Professional Engineers for EJCDC. All rights reserved.

2. Each submittal shall bear a stamp or specific written certification that Contractor has satisfied Contractor's obligations under the Contract Documents with respect to Contractor's review and approval of that submittal.

3. With each submittal, Contractor shall give Engineer specific written notice of any variations that the Shop Drawing or Sample may have from the requirements of the Contract Documents. This notice shall be both a written communication separate from the Shop Drawings or Sample submittal; and, in addition, by a specific notation made on each Shop Drawing or Sample submitted to Engineer for review and approval of each such variation.

D. *Engineer's Review:*

1. Engineer will provide timely review of Shop Drawings and Samples in accordance with the Schedule of Submittals acceptable to Engineer. Engineer's review and approval will be only to determine if the items covered by the submittals will, after installation or incorporation in the Work, conform to the information given in the Contract Documents and be compatible with the design concept of the completed Project as a functioning whole as indicated by the Contract Documents.

2. Engineer's review and approval will not extend to means, methods, techniques, sequences, or procedures of construction (except where a particular means, method, technique, sequence, or procedure of construction is specifically and expressly called for by the Contract Documents) or to safety precautions or programs incident thereto. The review and approval of a separate item as such will not indicate approval of the assembly in which the item functions.

3. Engineer's review and approval shall not relieve Contractor from responsibility for any variation from the requirements of the Contract Documents unless Contractor has complied with the requirements of Paragraph 6.17.C.3 and Engineer has given written approval of each such variation by specific written notation thereof incorporated in or accompanying the Shop Drawing or Sample. Engineer's review and approval shall not relieve Contractor from responsibility for complying with the requirements of Paragraph 6.17.C.1.

E. *Resubmittal Procedures:*

1. Contractor shall make corrections required by Engineer and shall return the required number of corrected copies of Shop Drawings and submit, as required, new Samples for review and approval. Contractor shall direct specific attention in writing to revisions other than the corrections called for by Engineer on previous submittals.

6.18 *Continuing the Work*

A. Contractor shall carry on the Work and adhere to the Progress Schedule during all disputes or disagreements with Owner. No Work shall be delayed or postponed pending resolution of any disputes or disagreements, except as permitted by Paragraph 15.04 or as Owner and Contractor may otherwise agree in writing.

Copyright © 2007 National Society of Professional Engineers for EJCDC. All rights reserved.

6.19 *Contractor's General Warranty and Guarantee*

A. Contractor warrants and guarantees to Owner that all Work will be in accordance with the Contract Documents and will not be defective. Engineer and its officers, directors, members, partners, employees, agents, consultants, and subcontractors shall be entitled to rely on representation of Contractor's warranty and guarantee.

B. Contractor's warranty and guarantee hereunder excludes defects or damage caused by:

1. abuse, modification, or improper maintenance or operation by persons other than Contractor, Subcontractors, Suppliers, or any other individual or entity for whom Contractor is responsible; or

2. normal wear and tear under normal usage.

C. Contractor's obligation to perform and complete the Work in accordance with the Contract Documents shall be absolute. None of the following will constitute an acceptance of Work that is not in accordance with the Contract Documents or a release of Contractor's obligation to perform the Work in accordance with the Contract Documents:

1. observations by Engineer;

2. recommendation by Engineer or payment by Owner of any progress or final payment;

3. the issuance of a certificate of Substantial Completion by Engineer or any payment related thereto by Owner;

4. use or occupancy of the Work or any part thereof by Owner;

5. any review and approval of a Shop Drawing or Sample submittal or the issuance of a notice of acceptability by Engineer;

6. any inspection, test, or approval by others; or

7. any correction of defective Work by Owner.

6.20 *Indemnification*

A. To the fullest extent permitted by Laws and Regulations, Contractor shall indemnify and hold harmless Owner and Engineer, and the officers, directors, members, partners, employees, agents, consultants and subcontractors of each and any of them from and against all claims, costs, losses, and damages (including but not limited to all fees and charges of engineers, architects, attorneys, and other professionals and all court or arbitration or other dispute resolution costs) arising out of or relating to the performance of the Work, provided that any such claim, cost, loss, or damage is attributable to bodily injury, sickness, disease, or death, or to injury to or destruction of tangible property (other than the Work itself), including the loss of use resulting therefrom but only to the extent caused by any negligent act or omission of Contractor, any Subcontractor, any Supplier, or any individual or entity directly or indirectly employed by any of them to perform any of the Work or anyone for whose acts any of them may be liable .

Copyright © 2007 National Society of Professional Engineers for EJCDC. All rights reserved.

B. In any and all claims against Owner or Engineer or any of their officers, directors, members, partners, employees, agents, consultants, or subcontractors by any employee (or the survivor or personal representative of such employee) of Contractor, any Subcontractor, any Supplier, or any individual or entity directly or indirectly employed by any of them to perform any of the Work, or anyone for whose acts any of them may be liable, the indemnification obligation under Paragraph 6.20.A shall not be limited in any way by any limitation on the amount or type of damages, compensation, or benefits payable by or for Contractor or any such Subcontractor, Supplier, or other individual or entity under workers' compensation acts, disability benefit acts, or other employee benefit acts.

C. The indemnification obligations of Contractor under Paragraph 6.20.A shall not extend to the liability of Engineer and Engineer's officers, directors, members, partners, employees, agents, consultants and subcontractors arising out of:

1. the preparation or approval of, or the failure to prepare or approve maps, Drawings, opinions, reports, surveys, Change Orders, designs, or Specifications; or

2. giving directions or instructions, or failing to give them, if that is the primary cause of the injury or damage.

6.21 *Delegation of Professional Design Services*

A. Contractor will not be required to provide professional design services unless such services are specifically required by the Contract Documents for a portion of the Work or unless such services are required to carry out Contractor's responsibilities for construction means, methods, techniques, sequences and procedures. Contractor shall not be required to provide professional services in violation of applicable law.

B. If professional design services or certifications by a design professional related to systems, materials or equipment are specifically required of Contractor by the Contract Documents, Owner and Engineer will specify all performance and design criteria that such services must satisfy. Contractor shall cause such services or certifications to be provided by a properly licensed professional, whose signature and seal shall appear on all drawings, calculations, specifications, certifications, Shop Drawings and other submittals prepared by such professional. Shop Drawings and other submittals related to the Work designed or certified by such professional, if prepared by others, shall bear such professional's written approval when submitted to Engineer.

C. Owner and Engineer shall be entitled to rely upon the adequacy, accuracy and completeness of the services, certifications or approvals performed by such design professionals, provided Owner and Engineer have specified to Contractor all performance and design criteria that such services must satisfy.

D. Pursuant to this Paragraph 6.21, Engineer's review and approval of design calculations and design drawings will be only for the limited purpose of checking for conformance with performance and design criteria given and the design concept expressed in the Contract Documents. Engineer's review and approval of Shop Drawings and other submittals (except design calculations and design drawings) will be only for the purpose stated in Paragraph 6.17.D.1.

Copyright © 2007 National Society of Professional Engineers for EJCDC. All rights reserved.

E. Contractor shall not be responsible for the adequacy of the performance or design criteria required by the Contract Documents.

ARTICLE 7 – OTHER WORK AT THE SITE

7.01 *Related Work at Site*

A. Owner may perform other work related to the Project at the Site with Owner's employees, or through other direct contracts therefor, or have other work performed by utility owners. If such other work is not noted in the Contract Documents, then:

1. written notice thereof will be given to Contractor prior to starting any such other work; and

2. if Owner and Contractor are unable to agree on entitlement to or on the amount or extent, if any, of any adjustment in the Contract Price or Contract Times that should be allowed as a result of such other work, a Claim may be made therefor as provided in Paragraph 10.05.

B. Contractor shall afford each other contractor who is a party to such a direct contract, each utility owner, and Owner, if Owner is performing other work with Owner's employees, proper and safe access to the Site, provide a reasonable opportunity for the introduction and storage of materials and equipment and the execution of such other work, and properly coordinate the Work with theirs. Contractor shall do all cutting, fitting, and patching of the Work that may be required to properly connect or otherwise make its several parts come together and properly integrate with such other work. Contractor shall not endanger any work of others by cutting, excavating, or otherwise altering such work; provided, however, that Contractor may cut or alter others' work with the written consent of Engineer and the others whose work will be affected. The duties and responsibilities of Contractor under this Paragraph are for the benefit of such utility owners and other contractors to the extent that there are comparable provisions for the benefit of Contractor in said direct contracts between Owner and such utility owners and other contractors.

C. If the proper execution or results of any part of Contractor's Work depends upon work performed by others under this Article 7, Contractor shall inspect such other work and promptly report to Engineer in writing any delays, defects, or deficiencies in such other work that render it unavailable or unsuitable for the proper execution and results of Contractor's Work. Contractor's failure to so report will constitute an acceptance of such other work as fit and proper for integration with Contractor's Work except for latent defects and deficiencies in such other work.

7.02 *Coordination*

A. If Owner intends to contract with others for the performance of other work on the Project at the Site, the following will be set forth in Supplementary Conditions:

1. the individual or entity who will have authority and responsibility for coordination of the activities among the various contractors will be identified;

2. the specific matters to be covered by such authority and responsibility will be itemized; and

3. the extent of such authority and responsibilities will be provided.

Copyright © 2007 National Society of Professional Engineers for EJCDC. All rights reserved.

B. Unless otherwise provided in the Supplementary Conditions, Owner shall have sole authority and responsibility for such coordination.

7.03 *Legal Relationships*

A. Paragraphs 7.01.A and 7.02 are not applicable for utilities not under the control of Owner.

B. Each other direct contract of Owner under Paragraph 7.01.A shall provide that the other contractor is liable to Owner and Contractor for the reasonable direct delay and disruption costs incurred by Contractor as a result of the other contractor's wrongful actions or inactions.

C. Contractor shall be liable to Owner and any other contractor under direct contract to Owner for the reasonable direct delay and disruption costs incurred by such other contractor as a result of Contractor's wrongful action or inactions.

ARTICLE 8 – OWNER'S RESPONSIBILITIES

8.01 *Communications to Contractor*

A. Except as otherwise provided in these General Conditions, Owner shall issue all communications to Contractor through Engineer.

8.02 *Replacement of Engineer*

A. In case of termination of the employment of Engineer, Owner shall appoint an engineer to whom Contractor makes no reasonable objection, whose status under the Contract Documents shall be that of the former Engineer.

8.03 *Furnish Data*

A. Owner shall promptly furnish the data required of Owner under the Contract Documents.

8.04 *Pay When Due*

A. Owner shall make payments to Contractor when they are due as provided in Paragraphs 14.02.C and 14.07.C.

8.05 *Lands and Easements; Reports and Tests*

A. Owner's duties with respect to providing lands and easements and providing engineering surveys to establish reference points are set forth in Paragraphs 4.01 and 4.05. Paragraph 4.02 refers to Owner's identifying and making available to Contractor copies of reports of explorations and tests of subsurface conditions and drawings of physical conditions relating to existing surface or subsurface structures at the Site.

8.06 *Insurance*

A. Owner's responsibilities, if any, with respect to purchasing and maintaining liability and property insurance are set forth in Article 5.

Copyright © 2007 National Society of Professional Engineers for EJCDC. All rights reserved.

8.07 *Change Orders*

A. Owner is obligated to execute Change Orders as indicated in Paragraph 10.03.

8.08 *Inspections, Tests, and Approvals*

A. Owner's responsibility with respect to certain inspections, tests, and approvals is set forth in Paragraph 13.03.B.

8.09 *Limitations on Owner's Responsibilities*

A. The Owner shall not supervise, direct, or have control or authority over, nor be responsible for, Contractor's means, methods, techniques, sequences, or procedures of construction, or the safety precautions and programs incident thereto, or for any failure of Contractor to comply with Laws and Regulations applicable to the performance of the Work. Owner will not be responsible for Contractor's failure to perform the Work in accordance with the Contract Documents.

8.10 *Undisclosed Hazardous Environmental Condition*

A. Owner's responsibility in respect to an undisclosed Hazardous Environmental Condition is set forth in Paragraph 4.06.

8.11 *Evidence of Financial Arrangements*

A. Upon request of Contractor, Owner shall furnish Contractor reasonable evidence that financial arrangements have been made to satisfy Owner's obligations under the Contract Documents.

8.12 *Compliance with Safety Program*

A. While at the Site, Owner's employees and representatives shall comply with the specific applicable requirements of Contractor's safety programs of which Owner has been informed pursuant to Paragraph 6.13.D.

ARTICLE 9 – ENGINEER'S STATUS DURING CONSTRUCTION

9.01 *Owner's Representative*

A. Engineer will be Owner's representative during the construction period. The duties and responsibilities and the limitations of authority of Engineer as Owner's representative during construction are set forth in the Contract Documents.

9.02 *Visits to Site*

A. Engineer will make visits to the Site at intervals appropriate to the various stages of construction as Engineer deems necessary in order to observe as an experienced and qualified design professional the progress that has been made and the quality of the various aspects of Contractor's executed Work. Based on information obtained during such visits and observations, Engineer, for the benefit of Owner, will determine, in general, if the Work is proceeding in accordance with the Contract Documents. Engineer will not be required to make exhaustive or

Copyright © 2007 National Society of Professional Engineers for EJCDC. All rights reserved.

continuous inspections on the Site to check the quality or quantity of the Work. Engineer's efforts will be directed toward providing for Owner a greater degree of confidence that the completed Work will conform generally to the Contract Documents. On the basis of such visits and observations, Engineer will keep Owner informed of the progress of the Work and will endeavor to guard Owner against defective Work.

B. Engineer's visits and observations are subject to all the limitations on Engineer's authority and responsibility set forth in Paragraph 9.09. Particularly, but without limitation, during or as a result of Engineer's visits or observations of Contractor's Work, Engineer will not supervise, direct, control, or have authority over or be responsible for Contractor's means, methods, techniques, sequences, or procedures of construction, or the safety precautions and programs incident thereto, or for any failure of Contractor to comply with Laws and Regulations applicable to the performance of the Work.

9.03 *Project Representative*

A. If Owner and Engineer agree, Engineer will furnish a Resident Project Representative to assist Engineer in providing more extensive observation of the Work. The authority and responsibilities of any such Resident Project Representative and assistants will be as provided in the Supplementary Conditions, and limitations on the responsibilities thereof will be as provided in Paragraph 9.09. If Owner designates another representative or agent to represent Owner at the Site who is not Engineer's consultant, agent or employee, the responsibilities and authority and limitations thereon of such other individual or entity will be as provided in the Supplementary Conditions.

9.04 *Authorized Variations in Work*

A. Engineer may authorize minor variations in the Work from the requirements of the Contract Documents which do not involve an adjustment in the Contract Price or the Contract Times and are compatible with the design concept of the completed Project as a functioning whole as indicated by the Contract Documents. These may be accomplished by a Field Order and will be binding on Owner and also on Contractor, who shall perform the Work involved promptly. If Owner or Contractor believes that a Field Order justifies an adjustment in the Contract Price or Contract Times, or both, and the parties are unable to agree on entitlement to or on the amount or extent, if any, of any such adjustment, a Claim may be made therefor as provided in Paragraph 10.05.

9.05 *Rejecting Defective Work*

A. Engineer will have authority to reject Work which Engineer believes to be defective, or that Engineer believes will not produce a completed Project that conforms to the Contract Documents or that will prejudice the integrity of the design concept of the completed Project as a functioning whole as indicated by the Contract Documents. Engineer will also have authority to require special inspection or testing of the Work as provided in Paragraph 13.04, whether or not the Work is fabricated, installed, or completed.

Copyright © 2007 National Society of Professional Engineers for EJCDC. All rights reserved.

9.06 *Shop Drawings, Change Orders and Payments*

A. In connection with Engineer's authority, and limitations thereof, as to Shop Drawings and Samples, see Paragraph 6.17.

B. In connection with Engineer's authority, and limitations thereof, as to design calculations and design drawings submitted in response to a delegation of professional design services, if any, see Paragraph 6.21.

C. In connection with Engineer's authority as to Change Orders, see Articles 10, 11, and 12.

D. In connection with Engineer's authority as to Applications for Payment, see Article 14.

9.07 *Determinations for Unit Price Work*

A. Engineer will determine the actual quantities and classifications of Unit Price Work performed by Contractor. Engineer will review with Contractor the Engineer's preliminary determinations on such matters before rendering a written decision thereon (by recommendation of an Application for Payment or otherwise). Engineer's written decision thereon will be final and binding (except as modified by Engineer to reflect changed factual conditions or more accurate data) upon Owner and Contractor, subject to the provisions of Paragraph 10.05.

9.08 *Decisions on Requirements of Contract Documents and Acceptability of Work*

A. Engineer will be the initial interpreter of the requirements of the Contract Documents and judge of the acceptability of the Work thereunder. All matters in question and other matters between Owner and Contractor arising prior to the date final payment is due relating to the acceptability of the Work, and the interpretation of the requirements of the Contract Documents pertaining to the performance of the Work, will be referred initially to Engineer in writing within 30 days of the event giving rise to the question.

B. Engineer will, with reasonable promptness, render a written decision on the issue referred. If Owner or Contractor believes that any such decision entitles them to an adjustment in the Contract Price or Contract Times or both, a Claim may be made under Paragraph 10.05. The date of Engineer's decision shall be the date of the event giving rise to the issues referenced for the purposes of Paragraph 10.05.B.

C. Engineer's written decision on the issue referred will be final and binding on Owner and Contractor, subject to the provisions of Paragraph 10.05.

D. When functioning as interpreter and judge under this Paragraph 9.08, Engineer will not show partiality to Owner or Contractor and will not be liable in connection with any interpretation or decision rendered in good faith in such capacity.

9.09 *Limitations on Engineer's Authority and Responsibilities*

A. Neither Engineer's authority or responsibility under this Article 9 or under any other provision of the Contract Documents nor any decision made by Engineer in good faith either to exercise or not

Copyright © 2007 National Society of Professional Engineers for EJCDC. All rights reserved.

exercise such authority or responsibility or the undertaking, exercise, or performance of any authority or responsibility by Engineer shall create, impose, or give rise to any duty in contract, tort, or otherwise owed by Engineer to Contractor, any Subcontractor, any Supplier, any other individual or entity, or to any surety for or employee or agent of any of them.

B. Engineer will not supervise, direct, control, or have authority over or be responsible for Contractor's means, methods, techniques, sequences, or procedures of construction, or the safety precautions and programs incident thereto, or for any failure of Contractor to comply with Laws and Regulations applicable to the performance of the Work. Engineer will not be responsible for Contractor's failure to perform the Work in accordance with the Contract Documents.

C. Engineer will not be responsible for the acts or omissions of Contractor or of any Subcontractor, any Supplier, or of any other individual or entity performing any of the Work.

D. Engineer's review of the final Application for Payment and accompanying documentation and all maintenance and operating instructions, schedules, guarantees, bonds, certificates of inspection, tests and approvals, and other documentation required to be delivered by Paragraph 14.07.A will only be to determine generally that their content complies with the requirements of, and in the case of certificates of inspections, tests, and approvals that the results certified indicate compliance with, the Contract Documents.

E. The limitations upon authority and responsibility set forth in this Paragraph 9.09 shall also apply to the Resident Project Representative, if any, and assistants, if any.

9.10 *Compliance with Safety Program*

A. While at the Site, Engineer's employees and representatives shall comply with the specific applicable requirements of Contractor's safety programs of which Engineer has been informed pursuant to Paragraph 6.13.D.

ARTICLE 10 – CHANGES IN THE WORK; CLAIMS

10.01 *Authorized Changes in the Work*

A. Without invalidating the Contract and without notice to any surety, Owner may, at any time or from time to time, order additions, deletions, or revisions in the Work by a Change Order, or a Work Change Directive. Upon receipt of any such document, Contractor shall promptly proceed with the Work involved which will be performed under the applicable conditions of the Contract Documents (except as otherwise specifically provided).

B. If Owner and Contractor are unable to agree on entitlement to, or on the amount or extent, if any, of an adjustment in the Contract Price or Contract Times, or both, that should be allowed as a result of a Work Change Directive, a Claim may be made therefor as provided in Paragraph 10.05.

Copyright © 2007 National Society of Professional Engineers for EJCDC. All rights reserved.

10.02 *Unauthorized Changes in the Work*

A. Contractor shall not be entitled to an increase in the Contract Price or an extension of the Contract Times with respect to any work performed that is not required by the Contract Documents as amended, modified, or supplemented as provided in Paragraph 3.04, except in the case of an emergency as provided in Paragraph 6.16 or in the case of uncovering Work as provided in Paragraph 13.04.D.

10.03 *Execution of Change Orders*

A. Owner and Contractor shall execute appropriate Change Orders recommended by Engineer covering:

1. changes in the Work which are: (i) ordered by Owner pursuant to Paragraph 10.01.A, (ii) required because of acceptance of defective Work under Paragraph 13.08.A or Owner's correction of defective Work under Paragraph 13.09, or (iii) agreed to by the parties;

2. changes in the Contract Price or Contract Times which are agreed to by the parties, including any undisputed sum or amount of time for Work actually performed in accordance with a Work Change Directive; and

3. changes in the Contract Price or Contract Times which embody the substance of any written decision rendered by Engineer pursuant to Paragraph 10.05; provided that, in lieu of executing any such Change Order, an appeal may be taken from any such decision in accordance with the provisions of the Contract Documents and applicable Laws and Regulations, but during any such appeal, Contractor shall carry on the Work and adhere to the Progress Schedule as provided in Paragraph 6.18.A.

10.04 *Notification to Surety*

A. If the provisions of any bond require notice to be given to a surety of any change affecting the general scope of the Work or the provisions of the Contract Documents (including, but not limited to, Contract Price or Contract Times), the giving of any such notice will be Contractor's responsibility. The amount of each applicable bond will be adjusted to reflect the effect of any such change.

10.05 *Claims*

A. *Engineer's Decision Required*: All Claims, except those waived pursuant to Paragraph 14.09, shall be referred to the Engineer for decision. A decision by Engineer shall be required as a condition precedent to any exercise by Owner or Contractor of any rights or remedies either may otherwise have under the Contract Documents or by Laws and Regulations in respect of such Claims.

B. *Notice:* Written notice stating the general nature of each Claim shall be delivered by the claimant to Engineer and the other party to the Contract promptly (but in no event later than 30 days) after the start of the event giving rise thereto. The responsibility to substantiate a Claim shall rest with the party making the Claim. Notice of the amount or extent of the Claim, with supporting data

Copyright © 2007 National Society of Professional Engineers for EJCDC. All rights reserved.

shall be delivered to the Engineer and the other party to the Contract within 60 days after the start of such event (unless Engineer allows additional time for claimant to submit additional or more accurate data in support of such Claim). A Claim for an adjustment in Contract Price shall be prepared in accordance with the provisions of Paragraph 12.01.B. A Claim for an adjustment in Contract Times shall be prepared in accordance with the provisions of Paragraph 12.02.B. Each Claim shall be accompanied by claimant's written statement that the adjustment claimed is the entire adjustment to which the claimant believes it is entitled as a result of said event. The opposing party shall submit any response to Engineer and the claimant within 30 days after receipt of the claimant's last submittal (unless Engineer allows additional time).

C. *Engineer's Action*: Engineer will review each Claim and, within 30 days after receipt of the last submittal of the claimant or the last submittal of the opposing party, if any, take one of the following actions in writing:

1. deny the Claim in whole or in part;

2. approve the Claim; or

3. notify the parties that the Engineer is unable to resolve the Claim if, in the Engineer's sole discretion, it would be inappropriate for the Engineer to do so. For purposes of further resolution of the Claim, such notice shall be deemed a denial.

D. In the event that Engineer does not take action on a Claim within said 30 days, the Claim shall be deemed denied.

E. Engineer's written action under Paragraph 10.05.C or denial pursuant to Paragraphs 10.05.C.3 or 10.05.D will be final and binding upon Owner and Contractor, unless Owner or Contractor invoke the dispute resolution procedure set forth in Article 16 within 30 days of such action or denial.

F. No Claim for an adjustment in Contract Price or Contract Times will be valid if not submitted in accordance with this Paragraph 10.05.

ARTICLE 11 – COST OF THE WORK; ALLOWANCES; UNIT PRICE WORK

11.01 *Cost of the Work*

A. *Costs Included:* The term Cost of the Work means the sum of all costs, except those excluded in Paragraph 11.01.B, necessarily incurred and paid by Contractor in the proper performance of the Work. When the value of any Work covered by a Change Order or when a Claim for an adjustment in Contract Price is determined on the basis of Cost of the Work, the costs to be reimbursed to Contractor will be only those additional or incremental costs required because of the change in the Work or because of the event giving rise to the Claim. Except as otherwise may be agreed to in writing by Owner, such costs shall be in amounts no higher than those prevailing in the locality of the Project, shall not include any of the costs itemized in Paragraph 11.01.B, and shall include only the following items:

Copyright © 2007 National Society of Professional Engineers for EJCDC. All rights reserved.

1. Payroll costs for employees in the direct employ of Contractor in the performance of the Work under schedules of job classifications agreed upon by Owner and Contractor. Such employees shall include, without limitation, superintendents, foremen, and other personnel employed full time on the Work. Payroll costs for employees not employed full time on the Work shall be apportioned on the basis of their time spent on the Work. Payroll costs shall include, but not be limited to, salaries and wages plus the cost of fringe benefits, which shall include social security contributions, unemployment, excise, and payroll taxes, workers' compensation, health and retirement benefits, bonuses, sick leave, vacation and holiday pay applicable thereto. The expenses of performing Work outside of regular working hours, on Saturday, Sunday, or legal holidays, shall be included in the above to the extent authorized by Owner.

2. Cost of all materials and equipment furnished and incorporated in the Work, including costs of transportation and storage thereof, and Suppliers' field services required in connection therewith. All cash discounts shall accrue to Contractor unless Owner deposits funds with Contractor with which to make payments, in which case the cash discounts shall accrue to Owner. All trade discounts, rebates and refunds and returns from sale of surplus materials and equipment shall accrue to Owner, and Contractor shall make provisions so that they may be obtained.

3. Payments made by Contractor to Subcontractors for Work performed by Subcontractors. If required by Owner, Contractor shall obtain competitive bids from subcontractors acceptable to Owner and Contractor and shall deliver such bids to Owner, who will then determine, with the advice of Engineer, which bids, if any, will be acceptable. If any subcontract provides that the Subcontractor is to be paid on the basis of Cost of the Work plus a fee, the Subcontractor's Cost of the Work and fee shall be determined in the same manner as Contractor's Cost of the Work and fee as provided in this Paragraph 11.01.

4. Costs of special consultants (including but not limited to engineers, architects, testing laboratories, surveyors, attorneys, and accountants) employed for services specifically related to the Work.

5. Supplemental costs including the following:

    a. The proportion of necessary transportation, travel, and subsistence expenses of Contractor's employees incurred in discharge of duties connected with the Work.

    b. Cost, including transportation and maintenance, of all materials, supplies, equipment, machinery, appliances, office, and temporary facilities at the Site, and hand tools not owned by the workers, which are consumed in the performance of the Work, and cost, less market value, of such items used but not consumed which remain the property of Contractor.

    c. Rentals of all construction equipment and machinery, and the parts thereof whether rented from Contractor or others in accordance with rental agreements approved by Owner with the advice of Engineer, and the costs of transportation, loading, unloading, assembly, dismantling, and removal thereof. All such costs shall be in accordance with the terms of

Copyright © 2007 National Society of Professional Engineers for EJCDC. All rights reserved.

said rental agreements. The rental of any such equipment, machinery, or parts shall cease when the use thereof is no longer necessary for the Work.

d. Sales, consumer, use, and other similar taxes related to the Work, and for which Contractor is liable, as imposed by Laws and Regulations.

e. Deposits lost for causes other than negligence of Contractor, any Subcontractor, or anyone directly or indirectly employed by any of them or for whose acts any of them may be liable, and royalty payments and fees for permits and licenses.

f. Losses and damages (and related expenses) caused by damage to the Work, not compensated by insurance or otherwise, sustained by Contractor in connection with the performance of the Work (except losses and damages within the deductible amounts of property insurance established in accordance with Paragraph 5.06.D), provided such losses and damages have resulted from causes other than the negligence of Contractor, any Subcontractor, or anyone directly or indirectly employed by any of them or for whose acts any of them may be liable. Such losses shall include settlements made with the written consent and approval of Owner. No such losses, damages, and expenses shall be included in the Cost of the Work for the purpose of determining Contractor's fee.

g. The cost of utilities, fuel, and sanitary facilities at the Site.

h. Minor expenses such as telegrams, long distance telephone calls, telephone service at the Site, express and courier services, and similar petty cash items in connection with the Work.

i. The costs of premiums for all bonds and insurance Contractor is required by the Contract Documents to purchase and maintain.

B. *Costs Excluded:* The term Cost of the Work shall not include any of the following items:

1. Payroll costs and other compensation of Contractor's officers, executives, principals (of partnerships and sole proprietorships), general managers, safety managers, engineers, architects, estimators, attorneys, auditors, accountants, purchasing and contracting agents, expediters, timekeepers, clerks, and other personnel employed by Contractor, whether at the Site or in Contractor's principal or branch office for general administration of the Work and not specifically included in the agreed upon schedule of job classifications referred to in Paragraph 11.01.A.1 or specifically covered by Paragraph 11.01.A.4, all of which are to be considered administrative costs covered by the Contractor's fee.

2. Expenses of Contractor's principal and branch offices other than Contractor's office at the Site.

3. Any part of Contractor's capital expenses, including interest on Contractor's capital employed for the Work and charges against Contractor for delinquent payments.

4. Costs due to the negligence of Contractor, any Subcontractor, or anyone directly or indirectly employed by any of them or for whose acts any of them may be liable, including but not

Copyright © 2007 National Society of Professional Engineers for EJCDC. All rights reserved.

limited to, the correction of defective Work, disposal of materials or equipment wrongly supplied, and making good any damage to property.

5. Other overhead or general expense costs of any kind and the costs of any item not specifically and expressly included in Paragraphs 11.01.A.

C. *Contractor's Fee:* When all the Work is performed on the basis of cost-plus, Contractor's fee shall be determined as set forth in the Agreement. When the value of any Work covered by a Change Order or when a Claim for an adjustment in Contract Price is determined on the basis of Cost of the Work, Contractor's fee shall be determined as set forth in Paragraph 12.01.C.

D. *Documentation:* Whenever the Cost of the Work for any purpose is to be determined pursuant to Paragraphs 11.01.A and 11.01.B, Contractor will establish and maintain records thereof in accordance with generally accepted accounting practices and submit in a form acceptable to Engineer an itemized cost breakdown together with supporting data.

11.02 *Allowances*

A. It is understood that Contractor has included in the Contract Price all allowances so named in the Contract Documents and shall cause the Work so covered to be performed for such sums and by such persons or entities as may be acceptable to Owner and Engineer.

B. *Cash Allowances:*

1. Contractor agrees that:

a. the cash allowances include the cost to Contractor (less any applicable trade discounts) of materials and equipment required by the allowances to be delivered at the Site, and all applicable taxes; and

b. Contractor's costs for unloading and handling on the Site, labor, installation, overhead, profit, and other expenses contemplated for the cash allowances have been included in the Contract Price and not in the allowances, and no demand for additional payment on account of any of the foregoing will be valid.

C. *Contingency Allowance:*

1. Contractor agrees that a contingency allowance, if any, is for the sole use of Owner to cover unanticipated costs.

D. Prior to final payment, an appropriate Change Order will be issued as recommended by Engineer to reflect actual amounts due Contractor on account of Work covered by allowances, and the Contract Price shall be correspondingly adjusted.

11.03 *Unit Price Work*

A. Where the Contract Documents provide that all or part of the Work is to be Unit Price Work, initially the Contract Price will be deemed to include for all Unit Price Work an amount equal to

Copyright © 2007 National Society of Professional Engineers for EJCDC. All rights reserved.

the sum of the unit price for each separately identified item of Unit Price Work times the estimated quantity of each item as indicated in the Agreement.

B. The estimated quantities of items of Unit Price Work are not guaranteed and are solely for the purpose of comparison of Bids and determining an initial Contract Price. Determinations of the actual quantities and classifications of Unit Price Work performed by Contractor will be made by Engineer subject to the provisions of Paragraph 9.07.

C. Each unit price will be deemed to include an amount considered by Contractor to be adequate to cover Contractor's overhead and profit for each separately identified item.

D. Owner or Contractor may make a Claim for an adjustment in the Contract Price in accordance with Paragraph 10.05 if:

1. the quantity of any item of Unit Price Work performed by Contractor differs materially and significantly from the estimated quantity of such item indicated in the Agreement; and

2. there is no corresponding adjustment with respect to any other item of Work; and

3. Contractor believes that Contractor is entitled to an increase in Contract Price as a result of having incurred additional expense or Owner believes that Owner is entitled to a decrease in Contract Price and the parties are unable to agree as to the amount of any such increase or decrease.

ARTICLE 12 – CHANGE OF CONTRACT PRICE; CHANGE OF CONTRACT TIMES

12.01 *Change of Contract Price*

A. The Contract Price may only be changed by a Change Order. Any Claim for an adjustment in the Contract Price shall be based on written notice submitted by the party making the Claim to the Engineer and the other party to the Contract in accordance with the provisions of Paragraph 10.05.

B. The value of any Work covered by a Change Order or of any Claim for an adjustment in the Contract Price will be determined as follows:

1. where the Work involved is covered by unit prices contained in the Contract Documents, by application of such unit prices to the quantities of the items involved (subject to the provisions of Paragraph 11.03); or

2. where the Work involved is not covered by unit prices contained in the Contract Documents, by a mutually agreed lump sum (which may include an allowance for overhead and profit not necessarily in accordance with Paragraph 12.01.C.2); or

3. where the Work involved is not covered by unit prices contained in the Contract Documents and agreement to a lump sum is not reached under Paragraph 12.01.B.2, on the basis of the Cost of the Work (determined as provided in Paragraph 11.01) plus a Contractor's fee for overhead and profit (determined as provided in Paragraph 12.01.C).

Copyright © 2007 National Society of Professional Engineers for EJCDC. All rights reserved.

C. *Contractor's Fee:* The Contractor's fee for overhead and profit shall be determined as follows:

1. a mutually acceptable fixed fee; or

2. if a fixed fee is not agreed upon, then a fee based on the following percentages of the various portions of the Cost of the Work:

   a. for costs incurred under Paragraphs 11.01.A.1 and 11.01.A.2, the Contractor's fee shall be 15 percent;

   b. for costs incurred under Paragraph 11.01.A.3, the Contractor's fee shall be five percent;

   c. where one or more tiers of subcontracts are on the basis of Cost of the Work plus a fee and no fixed fee is agreed upon, the intent of Paragraphs 12.01.C.2.a and 12.01.C.2.b is that the Subcontractor who actually performs the Work, at whatever tier, will be paid a fee of 15 percent of the costs incurred by such Subcontractor under Paragraphs 11.01.A.1 and 11.01.A.2 and that any higher tier Subcontractor and Contractor will each be paid a fee of five percent of the amount paid to the next lower tier Subcontractor;

   d. no fee shall be payable on the basis of costs itemized under Paragraphs 11.01.A.4, 11.01.A.5, and 11.01.B;

   e. the amount of credit to be allowed by Contractor to Owner for any change which results in a net decrease in cost will be the amount of the actual net decrease in cost plus a deduction in Contractor's fee by an amount equal to five percent of such net decrease; and

   f. when both additions and credits are involved in any one change, the adjustment in Contractor's fee shall be computed on the basis of the net change in accordance with Paragraphs 12.01.C.2.a through 12.01.C.2.e, inclusive.

12.02 *Change of Contract Times*

A. The Contract Times may only be changed by a Change Order. Any Claim for an adjustment in the Contract Times shall be based on written notice submitted by the party making the Claim to the Engineer and the other party to the Contract in accordance with the provisions of Paragraph 10.05.

B. Any adjustment of the Contract Times covered by a Change Order or any Claim for an adjustment in the Contract Times will be determined in accordance with the provisions of this Article 12.

12.03 *Delays*

A. Where Contractor is prevented from completing any part of the Work within the Contract Times due to delay beyond the control of Contractor, the Contract Times will be extended in an amount equal to the time lost due to such delay if a Claim is made therefor as provided in Paragraph 12.02.A. Delays beyond the control of Contractor shall include, but not be limited to, acts or

Copyright © 2007 National Society of Professional Engineers for EJCDC. All rights reserved.

neglect by Owner, acts or neglect of utility owners or other contractors performing other work as contemplated by Article 7, fires, floods, epidemics, abnormal weather conditions, or acts of God.

B. If Owner, Engineer, or other contractors or utility owners performing other work for Owner as contemplated by Article 7, or anyone for whom Owner is responsible, delays, disrupts, or interferes with the performance or progress of the Work, then Contractor shall be entitled to an equitable adjustment in the Contract Price or the Contract Times, or both. Contractor's entitlement to an adjustment of the Contract Times is conditioned on such adjustment being essential to Contractor's ability to complete the Work within the Contract Times.

C. If Contractor is delayed in the performance or progress of the Work by fire, flood, epidemic, abnormal weather conditions, acts of God, acts or failures to act of utility owners not under the control of Owner, or other causes not the fault of and beyond control of Owner and Contractor, then Contractor shall be entitled to an equitable adjustment in Contract Times, if such adjustment is essential to Contractor's ability to complete the Work within the Contract Times. Such an adjustment shall be Contractor's sole and exclusive remedy for the delays described in this Paragraph 12.03.C.

D. Owner, Engineer, and their officers, directors, members, partners, employees, agents, consultants, or subcontractors shall not be liable to Contractor for any claims, costs, losses, or damages (including but not limited to all fees and charges of engineers, architects, attorneys, and other professionals and all court or arbitration or other dispute resolution costs) sustained by Contractor on or in connection with any other project or anticipated project.

E. Contractor shall not be entitled to an adjustment in Contract Price or Contract Times for delays within the control of Contractor. Delays attributable to and within the control of a Subcontractor or Supplier shall be deemed to be delays within the control of Contractor.

ARTICLE 13 – TESTS AND INSPECTIONS; CORRECTION, REMOVAL OR ACCEPTANCE OF DEFECTIVE WORK

13.01 *Notice of Defects*

A. Prompt notice of all defective Work of which Owner or Engineer has actual knowledge will be given to Contractor. Defective Work may be rejected, corrected, or accepted as provided in this Article 13.

13.02 *Access to Work*

A. Owner, Engineer, their consultants and other representatives and personnel of Owner, independent testing laboratories, and governmental agencies with jurisdictional interests will have access to the Site and the Work at reasonable times for their observation, inspection, and testing. Contractor shall provide them proper and safe conditions for such access and advise them of Contractor's safety procedures and programs so that they may comply therewith as applicable.

Copyright © 2007 National Society of Professional Engineers for EJCDC. All rights reserved.

13.03 *Tests and Inspections*

A. Contractor shall give Engineer timely notice of readiness of the Work for all required inspections, tests, or approvals and shall cooperate with inspection and testing personnel to facilitate required inspections or tests.

B. Owner shall employ and pay for the services of an independent testing laboratory to perform all inspections, tests, or approvals required by the Contract Documents except:

1. for inspections, tests, or approvals covered by Paragraphs 13.03.C and 13.03.D below;

2. that costs incurred in connection with tests or inspections conducted pursuant to Paragraph 13.04.B shall be paid as provided in Paragraph 13.04.C; and

3. as otherwise specifically provided in the Contract Documents.

C. If Laws or Regulations of any public body having jurisdiction require any Work (or part thereof) specifically to be inspected, tested, or approved by an employee or other representative of such public body, Contractor shall assume full responsibility for arranging and obtaining such inspections, tests, or approvals, pay all costs in connection therewith, and furnish Engineer the required certificates of inspection or approval.

D. Contractor shall be responsible for arranging and obtaining and shall pay all costs in connection with any inspections, tests, or approvals required for Owner's and Engineer's acceptance of materials or equipment to be incorporated in the Work; or acceptance of materials, mix designs, or equipment submitted for approval prior to Contractor's purchase thereof for incorporation in the Work. Such inspections, tests, or approvals shall be performed by organizations acceptable to Owner and Engineer.

E. If any Work (or the work of others) that is to be inspected, tested, or approved is covered by Contractor without written concurrence of Engineer, Contractor shall, if requested by Engineer, uncover such Work for observation.

F. Uncovering Work as provided in Paragraph 13.03.E shall be at Contractor's expense unless Contractor has given Engineer timely notice of Contractor's intention to cover the same and Engineer has not acted with reasonable promptness in response to such notice.

13.04 *Uncovering Work*

A. If any Work is covered contrary to the written request of Engineer, it must, if requested by Engineer, be uncovered for Engineer's observation and replaced at Contractor's expense.

B. If Engineer considers it necessary or advisable that covered Work be observed by Engineer or inspected or tested by others, Contractor, at Engineer's request, shall uncover, expose, or otherwise make available for observation, inspection, or testing as Engineer may require, that portion of the Work in question, furnishing all necessary labor, material, and equipment.

Copyright © 2007 National Society of Professional Engineers for EJCDC. All rights reserved.

C. If it is found that the uncovered Work is defective, Contractor shall pay all claims, costs, losses, and damages (including but not limited to all fees and charges of engineers, architects, attorneys, and other professionals and all court or arbitration or other dispute resolution costs) arising out of or relating to such uncovering, exposure, observation, inspection, and testing, and of satisfactory replacement or reconstruction (including but not limited to all costs of repair or replacement of work of others); and Owner shall be entitled to an appropriate decrease in the Contract Price. If the parties are unable to agree as to the amount thereof, Owner may make a Claim therefor as provided in Paragraph 10.05.

D. If the uncovered Work is not found to be defective, Contractor shall be allowed an increase in the Contract Price or an extension of the Contract Times, or both, directly attributable to such uncovering, exposure, observation, inspection, testing, replacement, and reconstruction. If the parties are unable to agree as to the amount or extent thereof, Contractor may make a Claim therefor as provided in Paragraph 10.05.

13.05 *Owner May Stop the Work*

A. If the Work is defective, or Contractor fails to supply sufficient skilled workers or suitable materials or equipment, or fails to perform the Work in such a way that the completed Work will conform to the Contract Documents, Owner may order Contractor to stop the Work, or any portion thereof, until the cause for such order has been eliminated; however, this right of Owner to stop the Work shall not give rise to any duty on the part of Owner to exercise this right for the benefit of Contractor, any Subcontractor, any Supplier, any other individual or entity, or any surety for, or employee or agent of any of them.

13.06 *Correction or Removal of Defective Work*

A. Promptly after receipt of written notice, Contractor shall correct all defective Work, whether or not fabricated, installed, or completed, or, if the Work has been rejected by Engineer, remove it from the Project and replace it with Work that is not defective. Contractor shall pay all claims, costs, losses, and damages (including but not limited to all fees and charges of engineers, architects, attorneys, and other professionals and all court or arbitration or other dispute resolution costs) arising out of or relating to such correction or removal (including but not limited to all costs of repair or replacement of work of others).

B. When correcting defective Work under the terms of this Paragraph 13.06 or Paragraph 13.07, Contractor shall take no action that would void or otherwise impair Owner's special warranty and guarantee, if any, on said Work.

13.07 *Correction Period*

A. If within one year after the date of Substantial Completion (or such longer period of time as may be prescribed by the terms of any applicable special guarantee required by the Contract Documents) or by any specific provision of the Contract Documents, any Work is found to be defective, or if the repair of any damages to the land or areas made available for Contractor's use by Owner or permitted by Laws and Regulations as contemplated in Paragraph 6.11.A is found to be defective, Contractor shall promptly, without cost to Owner and in accordance with Owner's written instructions:

Copyright © 2007 National Society of Professional Engineers for EJCDC. All rights reserved.

1. repair such defective land or areas; or

2. correct such defective Work; or

3. if the defective Work has been rejected by Owner, remove it from the Project and replace it with Work that is not defective, and

4. satisfactorily correct or repair or remove and replace any damage to other Work, to the work of others or other land or areas resulting therefrom.

B. If Contractor does not promptly comply with the terms of Owner's written instructions, or in an emergency where delay would cause serious risk of loss or damage, Owner may have the defective Work corrected or repaired or may have the rejected Work removed and replaced. All claims, costs, losses, and damages (including but not limited to all fees and charges of engineers, architects, attorneys, and other professionals and all court or arbitration or other dispute resolution costs) arising out of or relating to such correction or repair or such removal and replacement (including but not limited to all costs of repair or replacement of work of others) will be paid by Contractor.

C. In special circumstances where a particular item of equipment is placed in continuous service before Substantial Completion of all the Work, the correction period for that item may start to run from an earlier date if so provided in the Specifications.

D. Where defective Work (and damage to other Work resulting therefrom) has been corrected or removed and replaced under this Paragraph 13.07, the correction period hereunder with respect to such Work will be extended for an additional period of one year after such correction or removal and replacement has been satisfactorily completed.

E. Contractor's obligations under this Paragraph 13.07 are in addition to any other obligation or warranty. The provisions of this Paragraph 13.07 shall not be construed as a substitute for, or a waiver of, the provisions of any applicable statute of limitation or repose.

13.08 *Acceptance of Defective Work*

A. If, instead of requiring correction or removal and replacement of defective Work, Owner (and, prior to Engineer's recommendation of final payment, Engineer) prefers to accept it, Owner may do so. Contractor shall pay all claims, costs, losses, and damages (including but not limited to all fees and charges of engineers, architects, attorneys, and other professionals and all court or arbitration or other dispute resolution costs) attributable to Owner's evaluation of and determination to accept such defective Work (such costs to be approved by Engineer as to reasonableness) and for the diminished value of the Work to the extent not otherwise paid by Contractor pursuant to this sentence. If any such acceptance occurs prior to Engineer's recommendation of final payment, a Change Order will be issued incorporating the necessary revisions in the Contract Documents with respect to the Work, and Owner shall be entitled to an appropriate decrease in the Contract Price, reflecting the diminished value of Work so accepted. If the parties are unable to agree as to the amount thereof, Owner may make a Claim therefor as provided in Paragraph 10.05. If the acceptance occurs after such recommendation, an appropriate amount will be paid by Contractor to Owner.

Copyright © 2007 National Society of Professional Engineers for EJCDC. All rights reserved.

13.09 *Owner May Correct Defective Work*

A. If Contractor fails within a reasonable time after written notice from Engineer to correct defective Work, or to remove and replace rejected Work as required by Engineer in accordance with Paragraph 13.06.A, or if Contractor fails to perform the Work in accordance with the Contract Documents, or if Contractor fails to comply with any other provision of the Contract Documents, Owner may, after seven days written notice to Contractor, correct, or remedy any such deficiency.

B. In exercising the rights and remedies under this Paragraph 13.09, Owner shall proceed expeditiously. In connection with such corrective or remedial action, Owner may exclude Contractor from all or part of the Site, take possession of all or part of the Work and suspend Contractor's services related thereto, take possession of Contractor's tools, appliances, construction equipment and machinery at the Site, and incorporate in the Work all materials and equipment stored at the Site or for which Owner has paid Contractor but which are stored elsewhere. Contractor shall allow Owner, Owner's representatives, agents and employees, Owner's other contractors, and Engineer and Engineer's consultants access to the Site to enable Owner to exercise the rights and remedies under this Paragraph.

C. All claims, costs, losses, and damages (including but not limited to all fees and charges of engineers, architects, attorneys, and other professionals and all court or arbitration or other dispute resolution costs) incurred or sustained by Owner in exercising the rights and remedies under this Paragraph 13.09 will be charged against Contractor, and a Change Order will be issued incorporating the necessary revisions in the Contract Documents with respect to the Work; and Owner shall be entitled to an appropriate decrease in the Contract Price. If the parties are unable to agree as to the amount of the adjustment, Owner may make a Claim therefor as provided in Paragraph 10.05. Such claims, costs, losses and damages will include but not be limited to all costs of repair, or replacement of work of others destroyed or damaged by correction, removal, or replacement of Contractor's defective Work.

D. Contractor shall not be allowed an extension of the Contract Times because of any delay in the performance of the Work attributable to the exercise by Owner of Owner's rights and remedies under this Paragraph 13.09.

ARTICLE 14 – PAYMENTS TO CONTRACTOR AND COMPLETION

14.01 *Schedule of Values*

A. The Schedule of Values established as provided in Paragraph 2.07.A will serve as the basis for progress payments and will be incorporated into a form of Application for Payment acceptable to Engineer. Progress payments on account of Unit Price Work will be based on the number of units completed.

14.02 *Progress Payments*

A. *Applications for Payments:*

1. At least 20 days before the date established in the Agreement for each progress payment (but not more often than once a month), Contractor shall submit to Engineer for review an

Copyright © 2007 National Society of Professional Engineers for EJCDC. All rights reserved.

Application for Payment filled out and signed by Contractor covering the Work completed as of the date of the Application and accompanied by such supporting documentation as is required by the Contract Documents. If payment is requested on the basis of materials and equipment not incorporated in the Work but delivered and suitably stored at the Site or at another location agreed to in writing, the Application for Payment shall also be accompanied by a bill of sale, invoice, or other documentation warranting that Owner has received the materials and equipment free and clear of all Liens and evidence that the materials and equipment are covered by appropriate property insurance or other arrangements to protect Owner's interest therein, all of which must be satisfactory to Owner.

2. Beginning with the second Application for Payment, each Application shall include an affidavit of Contractor stating that all previous progress payments received on account of the Work have been applied on account to discharge Contractor's legitimate obligations associated with prior Applications for Payment.

3. The amount of retainage with respect to progress payments will be as stipulated in the Agreement.

B. *Review of Applications:*

1. Engineer will, within 10 days after receipt of each Application for Payment, either indicate in writing a recommendation of payment and present the Application to Owner or return the Application to Contractor indicating in writing Engineer's reasons for refusing to recommend payment. In the latter case, Contractor may make the necessary corrections and resubmit the Application.

2. Engineer's recommendation of any payment requested in an Application for Payment will constitute a representation by Engineer to Owner, based on Engineer's observations of the executed Work as an experienced and qualified design professional, and on Engineer's review of the Application for Payment and the accompanying data and schedules, that to the best of Engineer's knowledge, information and belief:

   a. the Work has progressed to the point indicated;

   b. the quality of the Work is generally in accordance with the Contract Documents (subject to an evaluation of the Work as a functioning whole prior to or upon Substantial Completion, the results of any subsequent tests called for in the Contract Documents, a final determination of quantities and classifications for Unit Price Work under Paragraph 9.07, and any other qualifications stated in the recommendation); and

   c. the conditions precedent to Contractor's being entitled to such payment appear to have been fulfilled in so far as it is Engineer's responsibility to observe the Work.

3. By recommending any such payment Engineer will not thereby be deemed to have represented that:

   a. inspections made to check the quality or the quantity of the Work as it has been performed have been exhaustive, extended to every aspect of the Work in progress, or

Copyright © 2007 National Society of Professional Engineers for EJCDC. All rights reserved.

involved detailed inspections of the Work beyond the responsibilities specifically assigned to Engineer in the Contract Documents; or

b. there may not be other matters or issues between the parties that might entitle Contractor to be paid additionally by Owner or entitle Owner to withhold payment to Contractor.

4. Neither Engineer's review of Contractor's Work for the purposes of recommending payments nor Engineer's recommendation of any payment, including final payment, will impose responsibility on Engineer:

   a. to supervise, direct, or control the Work, or

   b. for the means, methods, techniques, sequences, or procedures of construction, or the safety precautions and programs incident thereto, or

   c. for Contractor's failure to comply with Laws and Regulations applicable to Contractor's performance of the Work, or

   d. to make any examination to ascertain how or for what purposes Contractor has used the moneys paid on account of the Contract Price, or

   e. to determine that title to any of the Work, materials, or equipment has passed to Owner free and clear of any Liens.

5. Engineer may refuse to recommend the whole or any part of any payment if, in Engineer's opinion, it would be incorrect to make the representations to Owner stated in Paragraph 14.02.B.2. Engineer may also refuse to recommend any such payment or, because of subsequently discovered evidence or the results of subsequent inspections or tests, revise or revoke any such payment recommendation previously made, to such extent as may be necessary in Engineer's opinion to protect Owner from loss because:

   a. the Work is defective, or completed Work has been damaged, requiring correction or replacement;

   b. the Contract Price has been reduced by Change Orders;

   c. Owner has been required to correct defective Work or complete Work in accordance with Paragraph 13.09; or

   d. Engineer has actual knowledge of the occurrence of any of the events enumerated in Paragraph 15.02.A.

C. *Payment Becomes Due:*

1. Ten days after presentation of the Application for Payment to Owner with Engineer's recommendation, the amount recommended will (subject to the provisions of Paragraph 14.02.D) become due, and when due will be paid by Owner to Contractor.

Copyright © 2007 National Society of Professional Engineers for EJCDC. All rights reserved.

D. *Reduction in Payment:*

1. Owner may refuse to make payment of the full amount recommended by Engineer because:

   a. claims have been made against Owner on account of Contractor's performance or furnishing of the Work;

   b. Liens have been filed in connection with the Work, except where Contractor has delivered a specific bond satisfactory to Owner to secure the satisfaction and discharge of such Liens;

   c. there are other items entitling Owner to a set-off against the amount recommended; or

   d. Owner has actual knowledge of the occurrence of any of the events enumerated in Paragraphs 14.02.B.5.a through 14.02.B.5.c or Paragraph 15.02.A.

2. If Owner refuses to make payment of the full amount recommended by Engineer, Owner will give Contractor immediate written notice (with a copy to Engineer) stating the reasons for such action and promptly pay Contractor any amount remaining after deduction of the amount so withheld. Owner shall promptly pay Contractor the amount so withheld, or any adjustment thereto agreed to by Owner and Contractor, when Contractor remedies the reasons for such action.

3. Upon a subsequent determination that Owner's refusal of payment was not justified, the amount wrongfully withheld shall be treated as an amount due as determined by Paragraph 14.02.C.1 and subject to interest as provided in the Agreement.

14.03 *Contractor's Warranty of Title*

A. Contractor warrants and guarantees that title to all Work, materials, and equipment covered by any Application for Payment, whether incorporated in the Project or not, will pass to Owner no later than the time of payment free and clear of all Liens.

14.04 *Substantial Completion*

A. When Contractor considers the entire Work ready for its intended use Contractor shall notify Owner and Engineer in writing that the entire Work is substantially complete (except for items specifically listed by Contractor as incomplete) and request that Engineer issue a certificate of Substantial Completion.

B. Promptly after Contractor's notification, Owner, Contractor, and Engineer shall make an inspection of the Work to determine the status of completion. If Engineer does not consider the Work substantially complete, Engineer will notify Contractor in writing giving the reasons therefor.

C. If Engineer considers the Work substantially complete, Engineer will deliver to Owner a tentative certificate of Substantial Completion which shall fix the date of Substantial Completion. There shall be attached to the certificate a tentative list of items to be completed or corrected before

Copyright © 2007 National Society of Professional Engineers for EJCDC. All rights reserved.

final payment. Owner shall have seven days after receipt of the tentative certificate during which to make written objection to Engineer as to any provisions of the certificate or attached list. If, after considering such objections, Engineer concludes that the Work is not substantially complete, Engineer will, within 14 days after submission of the tentative certificate to Owner, notify Contractor in writing, stating the reasons therefor. If, after consideration of Owner's objections, Engineer considers the Work substantially complete, Engineer will, within said 14 days, execute and deliver to Owner and Contractor a definitive certificate of Substantial Completion (with a revised tentative list of items to be completed or corrected) reflecting such changes from the tentative certificate as Engineer believes justified after consideration of any objections from Owner.

D. At the time of delivery of the tentative certificate of Substantial Completion, Engineer will deliver to Owner and Contractor a written recommendation as to division of responsibilities pending final payment between Owner and Contractor with respect to security, operation, safety, and protection of the Work, maintenance, heat, utilities, insurance, and warranties and guarantees. Unless Owner and Contractor agree otherwise in writing and so inform Engineer in writing prior to Engineer's issuing the definitive certificate of Substantial Completion, Engineer's aforesaid recommendation will be binding on Owner and Contractor until final payment.

E. Owner shall have the right to exclude Contractor from the Site after the date of Substantial Completion subject to allowing Contractor reasonable access to remove its property and complete or correct items on the tentative list.

14.05 *Partial Utilization*

A. Prior to Substantial Completion of all the Work, Owner may use or occupy any substantially completed part of the Work which has specifically been identified in the Contract Documents, or which Owner, Engineer, and Contractor agree constitutes a separately functioning and usable part of the Work that can be used by Owner for its intended purpose without significant interference with Contractor's performance of the remainder of the Work, subject to the following conditions:

1. Owner at any time may request Contractor in writing to permit Owner to use or occupy any such part of the Work which Owner believes to be ready for its intended use and substantially complete. If and when Contractor agrees that such part of the Work is substantially complete, Contractor, Owner, and Engineer will follow the procedures of Paragraph 14.04.A through D for that part of the Work.

2. Contractor at any time may notify Owner and Engineer in writing that Contractor considers any such part of the Work ready for its intended use and substantially complete and request Engineer to issue a certificate of Substantial Completion for that part of the Work.

3. Within a reasonable time after either such request, Owner, Contractor, and Engineer shall make an inspection of that part of the Work to determine its status of completion. If Engineer does not consider that part of the Work to be substantially complete, Engineer will notify Owner and Contractor in writing giving the reasons therefor. If Engineer considers that part of the Work to be substantially complete, the provisions of Paragraph 14.04 will apply with respect to certification of Substantial Completion of that part of the Work and the division of responsibility in respect thereof and access thereto.

Copyright © 2007 National Society of Professional Engineers for EJCDC. All rights reserved.

4. No use or occupancy or separate operation of part of the Work may occur prior to compliance with the requirements of Paragraph 5.10 regarding property insurance.

14.06 *Final Inspection*

A. Upon written notice from Contractor that the entire Work or an agreed portion thereof is complete, Engineer will promptly make a final inspection with Owner and Contractor and will notify Contractor in writing of all particulars in which this inspection reveals that the Work is incomplete or defective. Contractor shall immediately take such measures as are necessary to complete such Work or remedy such deficiencies.

14.07 *Final Payment*

A. *Application for Payment:*

1. After Contractor has, in the opinion of Engineer, satisfactorily completed all corrections identified during the final inspection and has delivered, in accordance with the Contract Documents, all maintenance and operating instructions, schedules, guarantees, bonds, certificates or other evidence of insurance, certificates of inspection, marked-up record documents (as provided in Paragraph 6.12), and other documents, Contractor may make application for final payment following the procedure for progress payments.

2. The final Application for Payment shall be accompanied (except as previously delivered) by:

   a. all documentation called for in the Contract Documents, including but not limited to the evidence of insurance required by Paragraph 5.04.B.6;

   b. consent of the surety, if any, to final payment;

   c. a list of all Claims against Owner that Contractor believes are unsettled; and

   d. complete and legally effective releases or waivers (satisfactory to Owner) of all Lien rights arising out of or Liens filed in connection with the Work.

3. In lieu of the releases or waivers of Liens specified in Paragraph 14.07.A.2 and as approved by Owner, Contractor may furnish receipts or releases in full and an affidavit of Contractor that: (i) the releases and receipts include all labor, services, material, and equipment for which a Lien could be filed; and (ii) all payrolls, material and equipment bills, and other indebtedness connected with the Work for which Owner might in any way be responsible, or which might in any way result in liens or other burdens on Owner's property, have been paid or otherwise satisfied. If any Subcontractor or Supplier fails to furnish such a release or receipt in full, Contractor may furnish a bond or other collateral satisfactory to Owner to indemnify Owner against any Lien.

B. *Engineer's Review of Application and Acceptance:*

1. If, on the basis of Engineer's observation of the Work during construction and final inspection, and Engineer's review of the final Application for Payment and accompanying

Copyright © 2007 National Society of Professional Engineers for EJCDC. All rights reserved.

documentation as required by the Contract Documents, Engineer is satisfied that the Work has been completed and Contractor's other obligations under the Contract Documents have been fulfilled, Engineer will, within ten days after receipt of the final Application for Payment, indicate in writing Engineer's recommendation of payment and present the Application for Payment to Owner for payment. At the same time Engineer will also give written notice to Owner and Contractor that the Work is acceptable subject to the provisions of Paragraph 14.09. Otherwise, Engineer will return the Application for Payment to Contractor, indicating in writing the reasons for refusing to recommend final payment, in which case Contractor shall make the necessary corrections and resubmit the Application for Payment.

C. *Payment Becomes Due:*

1. Thirty days after the presentation to Owner of the Application for Payment and accompanying documentation, the amount recommended by Engineer, less any sum Owner is entitled to set off against Engineer's recommendation, including but not limited to liquidated damages, will become due and will be paid by Owner to Contractor.

14.08 *Final Completion Delayed*

A. If, through no fault of Contractor, final completion of the Work is significantly delayed, and if Engineer so confirms, Owner shall, upon receipt of Contractor's final Application for Payment (for Work fully completed and accepted) and recommendation of Engineer, and without terminating the Contract, make payment of the balance due for that portion of the Work fully completed and accepted. If the remaining balance to be held by Owner for Work not fully completed or corrected is less than the retainage stipulated in the Agreement, and if bonds have been furnished as required in Paragraph 5.01, the written consent of the surety to the payment of the balance due for that portion of the Work fully completed and accepted shall be submitted by Contractor to Engineer with the Application for such payment. Such payment shall be made under the terms and conditions governing final payment, except that it shall not constitute a waiver of Claims.

14.09 *Waiver of Claims*

A. The making and acceptance of final payment will constitute:

1. a waiver of all Claims by Owner against Contractor, except Claims arising from unsettled Liens, from defective Work appearing after final inspection pursuant to Paragraph 14.06, from failure to comply with the Contract Documents or the terms of any special guarantees specified therein, or from Contractor's continuing obligations under the Contract Documents; and

2. a waiver of all Claims by Contractor against Owner other than those previously made in accordance with the requirements herein and expressly acknowledged by Owner in writing as still unsettled.

Copyright © 2007 National Society of Professional Engineers for EJCDC. All rights reserved.

ARTICLE 15 – SUSPENSION OF WORK AND TERMINATION

15.01 *Owner May Suspend Work*

A. At any time and without cause, Owner may suspend the Work or any portion thereof for a period of not more than 90 consecutive days by notice in writing to Contractor and Engineer which will fix the date on which Work will be resumed. Contractor shall resume the Work on the date so fixed. Contractor shall be granted an adjustment in the Contract Price or an extension of the Contract Times, or both, directly attributable to any such suspension if Contractor makes a Claim therefor as provided in Paragraph 10.05.

15.02 *Owner May Terminate for Cause*

A. The occurrence of any one or more of the following events will justify termination for cause:

1. Contractor's persistent failure to perform the Work in accordance with the Contract Documents (including, but not limited to, failure to supply sufficient skilled workers or suitable materials or equipment or failure to adhere to the Progress Schedule established under Paragraph 2.07 as adjusted from time to time pursuant to Paragraph 6.04);

2. Contractor's disregard of Laws or Regulations of any public body having jurisdiction;

3. Contractor's repeated disregard of the authority of Engineer; or

4. Contractor's violation in any substantial way of any provisions of the Contract Documents.

B. If one or more of the events identified in Paragraph 15.02.A occur, Owner may, after giving Contractor (and surety) seven days written notice of its intent to terminate the services of Contractor:

1. exclude Contractor from the Site, and take possession of the Work and of all Contractor's tools, appliances, construction equipment, and machinery at the Site, and use the same to the full extent they could be used by Contractor (without liability to Contractor for trespass or conversion);

2. incorporate in the Work all materials and equipment stored at the Site or for which Owner has paid Contractor but which are stored elsewhere; and

3. complete the Work as Owner may deem expedient.

C. If Owner proceeds as provided in Paragraph 15.02.B, Contractor shall not be entitled to receive any further payment until the Work is completed. If the unpaid balance of the Contract Price exceeds all claims, costs, losses, and damages (including but not limited to all fees and charges of engineers, architects, attorneys, and other professionals and all court or arbitration or other dispute resolution costs) sustained by Owner arising out of or relating to completing the Work, such excess will be paid to Contractor. If such claims, costs, losses, and damages exceed such unpaid balance, Contractor shall pay the difference to Owner. Such claims, costs, losses, and damages incurred by Owner will be reviewed by Engineer as to their reasonableness and, when

Copyright © 2007 National Society of Professional Engineers for EJCDC. All rights reserved.

so approved by Engineer, incorporated in a Change Order. When exercising any rights or remedies under this Paragraph, Owner shall not be required to obtain the lowest price for the Work performed.

D. Notwithstanding Paragraphs 15.02.B and 15.02.C, Contractor's services will not be terminated if Contractor begins within seven days of receipt of notice of intent to terminate to correct its failure to perform and proceeds diligently to cure such failure within no more than 30 days of receipt of said notice.

E. Where Contractor's services have been so terminated by Owner, the termination will not affect any rights or remedies of Owner against Contractor then existing or which may thereafter accrue. Any retention or payment of moneys due Contractor by Owner will not release Contractor from liability.

F. If and to the extent that Contractor has provided a performance bond under the provisions of Paragraph 5.01.A, the termination procedures of that bond shall supersede the provisions of Paragraphs 15.02.B and 15.02.C.

15.03 *Owner May Terminate For Convenience*

A. Upon seven days written notice to Contractor and Engineer, Owner may, without cause and without prejudice to any other right or remedy of Owner, terminate the Contract. In such case, Contractor shall be paid for (without duplication of any items):

1. completed and acceptable Work executed in accordance with the Contract Documents prior to the effective date of termination, including fair and reasonable sums for overhead and profit on such Work;

2. expenses sustained prior to the effective date of termination in performing services and furnishing labor, materials, or equipment as required by the Contract Documents in connection with uncompleted Work, plus fair and reasonable sums for overhead and profit on such expenses;

3. all claims, costs, losses, and damages (including but not limited to all fees and charges of engineers, architects, attorneys, and other professionals and all court or arbitration or other dispute resolution costs) incurred in settlement of terminated contracts with Subcontractors, Suppliers, and others; and

4. reasonable expenses directly attributable to termination.

B. Contractor shall not be paid on account of loss of anticipated profits or revenue or other economic loss arising out of or resulting from such termination.

15.04 *Contractor May Stop Work or Terminate*

A. If, through no act or fault of Contractor, (i) the Work is suspended for more than 90 consecutive days by Owner or under an order of court or other public authority, or (ii) Engineer fails to act on any Application for Payment within 30 days after it is submitted, or (iii) Owner fails for 30 days

Copyright © 2007 National Society of Professional Engineers for EJCDC. All rights reserved.

to pay Contractor any sum finally determined to be due, then Contractor may, upon seven days written notice to Owner and Engineer, and provided Owner or Engineer do not remedy such suspension or failure within that time, terminate the Contract and recover from Owner payment on the same terms as provided in Paragraph 15.03.

B. In lieu of terminating the Contract and without prejudice to any other right or remedy, if Engineer has failed to act on an Application for Payment within 30 days after it is submitted, or Owner has failed for 30 days to pay Contractor any sum finally determined to be due, Contractor may, seven days after written notice to Owner and Engineer, stop the Work until payment is made of all such amounts due Contractor, including interest thereon. The provisions of this Paragraph 15.04 are not intended to preclude Contractor from making a Claim under Paragraph 10.05 for an adjustment in Contract Price or Contract Times or otherwise for expenses or damage directly attributable to Contractor's stopping the Work as permitted by this Paragraph.

ARTICLE 16 – DISPUTE RESOLUTION

16.01 *Methods and Procedures*

A. Either Owner or Contractor may request mediation of any Claim submitted to Engineer for a decision under Paragraph 10.05 before such decision becomes final and binding. The mediation will be governed by the Construction Industry Mediation Rules of the American Arbitration Association in effect as of the Effective Date of the Agreement. The request for mediation shall be submitted in writing to the American Arbitration Association and the other party to the Contract. Timely submission of the request shall stay the effect of Paragraph 10.05.E.

B. Owner and Contractor shall participate in the mediation process in good faith. The process shall be concluded within 60 days of filing of the request. The date of termination of the mediation shall be determined by application of the mediation rules referenced above.

C. If the Claim is not resolved by mediation, Engineer's action under Paragraph 10.05.C or a denial pursuant to Paragraphs 10.05.C.3 or 10.05.D shall become final and binding 30 days after termination of the mediation unless, within that time period, Owner or Contractor:

1. elects in writing to invoke any dispute resolution process provided for in the Supplementary Conditions; or

2. agrees with the other party to submit the Claim to another dispute resolution process; or

3. gives written notice to the other party of the intent to submit the Claim to a court of competent jurisdiction.

ARTICLE 17 – MISCELLANEOUS

17.01 *Giving Notice*

A. Whenever any provision of the Contract Documents requires the giving of written notice, it will be deemed to have been validly given if:

Copyright © 2007 National Society of Professional Engineers for EJCDC. All rights reserved.

1. delivered in person to the individual or to a member of the firm or to an officer of the corporation for whom it is intended; or

2. delivered at or sent by registered or certified mail, postage prepaid, to the last business address known to the giver of the notice.

17.02 *Computation of Times*

A. When any period of time is referred to in the Contract Documents by days, it will be computed to exclude the first and include the last day of such period. If the last day of any such period falls on a Saturday or Sunday or on a day made a legal holiday by the law of the applicable jurisdiction, such day will be omitted from the computation.

17.03 *Cumulative Remedies*

A. The duties and obligations imposed by these General Conditions and the rights and remedies available hereunder to the parties hereto are in addition to, and are not to be construed in any way as a limitation of, any rights and remedies available to any or all of them which are otherwise imposed or available by Laws or Regulations, by special warranty or guarantee, or by other provisions of the Contract Documents. The provisions of this Paragraph will be as effective as if repeated specifically in the Contract Documents in connection with each particular duty, obligation, right, and remedy to which they apply.

17.04 *Survival of Obligations*

A. All representations, indemnifications, warranties, and guarantees made in, required by, or given in accordance with the Contract Documents, as well as all continuing obligations indicated in the Contract Documents, will survive final payment, completion, and acceptance of the Work or termination or completion of the Contract or termination of the services of Contractor.

17.05 *Controlling Law*

A. This Contract is to be governed by the law of the state in which the Project is located.

17.06 *Headings*

A. Article and paragraph headings are inserted for convenience only and do not constitute parts of these General Conditions.

Copyright © 2007 National Society of Professional Engineers for EJCDC. All rights reserved.

SUPPLEMENTAL GENERAL CONDITIONS

GENERAL CONDITIONS

The General Conditions of the Contract for Construction, EJCDC Document C-700, 2007 Edition, as bound herewith, shall be the General conditions of the Contract, except as amended by these Supplemental General Conditions

CHANGES AND ADDITIONS TO VARIOUS ARTICLES OF THE GENERAL CONDITIONS

Article 1 Definitions

Article 1 is hereby modified as follows:

Delete the definition "Notice to Proceed"

Article 2 Preliminary Matters

Article 2.02 is modified as follows:

DELETE Article 2.02 in its entirety

Article 2.03 is modified as follows:

30th day is changed to 10th day, and delete "A Notice to Proceed…earlier"

Article 3 Reporting and Resolving Discrepancies

Article 3.03A.# - change "unless" to "that" and add knowledge thereof, or should have had knowledge of….

Article 4 Availability of lands

Article 4.01B – delete "as necessary for giving notice of or filing a mechanics or construction lien against such lands in accordance with applicable Laws & Regulations."

Article 4.06G – Hazardous Environmental Conditions at Site - Delete in its entirety

Article 5 Bonds and Insurance

Delete Article 5 in its entirety and substitute the following:

PERFORMANCE BOND AND LABOR AND MATERIAL PAYMENT BOND

The Contractor shall, within ten (10) days from the date of the Notice of Award, furnish the City of Meriden with a PERFORMANCE BOND and a LABOR AND MATERIAL PAYMENT BOND, both in the amount of 100% of the amount bid, conditioned upon the performance of the Contractor on all undertaking, covenants, terms, and conditions and agreements of the contract. The bond shall be in the form of the specimen bonds annexed hereto, such bonds shall be executed by the contractor and a corporate bonding company licensed, authorized, and admitted to transact such business in the State of Connecticut and named on the current list of "Surety Companies acceptable on Federal Bonds", as published in the "Treasury Department" listed for an amount equal to the amount of the reinsurance. Written evidence of how any excess suretyship has been placed by the surety signing the bonds shall accompany the bonds. The expense of the bonds shall be borne by the Contractor. If at anytime a surety on any such bond is declared bankrupt or loses its right to do business in the State of Connecticut, or is removed from the list of Surety Companies acceptable on Federal Bonds, or for any other justifiable cause, the Contractor shall, within ten (10) days after notice from the City of Meriden to do so. substitute an acceptable bond(s) in such form and sum and signed by such other surety or sureties as may be

paid by the Contractor. No payments shall be deemed due nor shall be made until the new surety or sureties have furnished an acceptable bond to the City.

If the Contractor is a partnership, the bonds shall be signed by each of the individuals who are partners; if a corporation, the bonds shall be signed in the correct corporation name by a duly authorized office, agent, or attorney-in-fact. There should be executed an appropriate number of counterparts of the bond corresponding to the number of counterparts of the contract. Each executed bond shall be accompanied by 1) appropriate acknowledgements of the respective parties; 2) appropriate duly certified copy of Power of Attorney or other certificate of authority where bond is executed by agent, officer, or other representative of Contractor or surety; 3) a duly certified extract from by-laws or resolutions or surety under which Power of Attorney or other certificates of authority of its agent, officer, or representative was issued.

The Contractor hereby agrees and understands that a Notice of Award is expressly conditional upon the receipt of these bonds and a Certificate of Insurance naming the City of Meriden (and others as appropriate) as ADDITIONAL INSURED. If said documents are not received by the City of Meriden within ten (10) days from the date of Notice of Award, the City of Meriden reserves the right to withdraw its conditional acceptance of the bid and cancel the Notice of Award.

PERFORMANCE BOND

KNOW ALL MEN BY THESE PRESENTS, that
(here insert full name and address or legal title of Contractor)

as Principal herinafter called contractor and
(here insert full name and address or legal title of Surety

As Surety, hereinafter called Surety, are held and firmly bound unto
(here insert full name and address or legal title of Owner)

As Obligee, hereinafter called Owner, in the amount of

Dollars $_____

for the payment whereof Contractor and Surety bind themselves, their heirs, executors, administrators, successors and assigns, jointly and severally, firmly by these presents.

WHEREAS,

Contractor has by written agreement dated 20 , entered into a contract with Owner for
(here insert full name, address and description of project)

In accordance with Drawings and Specifications prepared by (here insert full name and address or legal title of Engineer/Architect)

Which contract is by reference made a part hereof, and is hereinafter referred to as the Contract.

PERFORMANCE BOND

NOW, THEREFORE, THE CONDITION OF THIS OBLIGATION is such that, if Contractor, shall promptly and faithfully perform said Contract, then this obligation shall be null and void; otherwise it shall remain in full force and effect.

The Surety hereby waives, notice of any alteration or extension of time made by the Owner.

Whenever Contractor shall be, and declared by Owner to be in default under the Contract, the Owner having performed Owner's obligations thereunder, the surety may promptly remedy the default, or shall promptly

1) Complete the Contract in accordance with its terms and conditions, or

2) Obtain a bid or bids for completing the Contract in accordance with its terms and conditions, and upon determination by Surety of the lowest responsible bidder, or, if the Owner elects, upon determination by the Owner and the Surety jointly of the lowest responsible bidder, arrange for a contract between such bidder and Owner, and make available as Work progresses (even though there should be a default of a succession of defaults, under the contract or contracts of completion arranged under this paragraph sufficient funds to pay the cost of completion less the balance of the contract price; but not exceeding, including other costs and damages for which the Surety may be liable hereunder, the amount set forth in the first paragraph hereof. The term "balance of the contract price," as used in this paragraph, shall mean the total amount payable by Owner to Contractor under the Contract and any amendments thereto, less the amount properly paid by Owner to Contractor.

Any suit under this bond must be instituted before the expiration of two (2) years from the date on which final payment under the Contract falls due.

No right of action shall accrue on this bond to or for the use of any person or corporation other than the Owner named herein or the heirs, executors, administrators or successors of the Owner.

Signed and sealed this day of 20

_____
(Witness)

_____
(Witness)

_____
(Principal)

_____
(Title)

_____
(Surety)

_____
(Title)

LABOR AND MATERIAL PAYMENT BOND

KNOW ALL MEN BY THESE PRESENTS, that
(here insert full name and address or legal title of Contractor)

as Principal, herinafter called Principal, and
(here insert full name and address or legal title of Surety

As Surety, hereinafter called Surety, are held and firmly bound unto
(here insert full name and address or legal title of Owner)

As Obligee, hereinafter called Owner, for the use and benefit of claimants as hereinbelow defined, in the amount of Dollars $_____

For the payment whereof Principal and Surety bind themselves, their heirs, executors, administrators, successors and assigns, jointly and severally, firmly by these presents.

WHEREAS,

Principal has by written agreement dated 20 , entered into a contract with Owner for
(here insert full name, address and description of project)

In accordance with Drawings and Specifications prepared by

(here insert full name and address or legal title of Engineer/Architect)

which contract is by reference made a part hereof, and is hereinafter referred to as the Contract.

LABOR AND MATERIAL PAYMENT BOND

NOW, THEREFORE, THE CONDITION OF THIS OBLIGATION is such that, if Principal shall promptly make payment to all claimants as hereinafter defined, for all labor and material used or reasonably required for use in the performance of the Contract, then this obligation shall be void; otherwise it shall remain in full force and effect, subject, however, to the following conditions:

1. A claimant is defined as one having a direct contract with the Principal or with a Subcontractor of the Principal for labor, material, or both, used or reasonably required for use in the performance of the Contract, labor and material being construed to include that part of water, gas, power, light, heat, oil, gasoline, telephone service or rental of equipment directly applicable to the Contract.

2. The above named Principal and Surety hereby jointly and severally agree with the Owner that every claimant as herein defined, who has not been paid in full before the expiration of a period of ninety (90) days after the date on which the last of such claimant's work or labor was done or performed or materials were furnished by such claimant, may sue on this bond for the use of such claimant, prosecute the suit to final judgment for such sum or sums as may be justly due claimant, and have execution thereon. The Owner shall not be liable for the payment of any costs or expenses of any such suit.

3. No suit or action shall be commenced hereunder by any claimant:

a) Unless claimant, other than one having a direct contact with the Principal, shall have given written notice to any two of the following: the Principal, the Owner, or the Surety above named, within ninety (90) days after such claimant did or performed the last of the work or labor, or furnished the last of the materials for which said claim is made, stating with substantial accuracy the amount claimed and the name of the party to whom the materials were furnished, or for whom the work or labor was done or performed. Such notice shall be served by mailing the same by registered mail or certified mail, postage prepaid, in an envelop addressed to the Principal Owner or Surety, at any place where an office is regularly maintained for the transaction of business, or served in any manner in which legal process may be served in the state in which the aforesaid project is located, save that such service need not be made by a public officer.

b) After the expiration of one (1) year following the date on which Principal ceased Work on said Contract, it being understood, however, that if any limitation embodied in this bond is prohibited by any law controlling the construction hereof such limitation shall be deemed to be amended so as to be equal to the minimum period of limitation permitted by such law.

c) Other than in a state court of competent jurisdiction in and for the county or other political subdivision of the state in which the Project or any part thereof, is situated, or in the United States District Court for the district in which the Project, or any part thereof is situated, and not elsewhere.

4. The amount of this bond shall be reduced by and to the extent of any payment or payments made in good faith hereunder, inclusive of the payment by Surety of mechanics' liens which may be filed of record against said improvement, whether or not claim for the amount of such lien be presented under and against this bond.

Signed and sealed this day of 20

_____
(Principal)

_____
(Witness)

_____
(Title)

_____
(Surety)

_____
(Witness)

_____
(Title)

INSURANCE REQUIREMENTS *

All insurance coverage shall be provided by the Contractor and by or for any of their Subcontractors at no additional expense to the City. The scope and limits of insurance coverages specified are the minimum requirements and shall in no way limit or exclude the City from requesting additional limits and coverage provided under the Contractor's policies and/or their Subcontractors' policies. The Contractor shall either require each of their Subcontractors to produce identical insurance coverage requirements as detailed hereinafter or the Contractor shall secure the coverage for all Subcontractors under the Contractor's own policies.

The Contractor and/or Subcontractors shall be responsible for maintaining the stated insurance coverage in force for the life of the Contract with insurance carriers licensed and authorized to underwrite such insurance in the State of Connecticut. (Insurance carriers shall be rated A or higher by AM Best Co.)

The type and limits of insurance coverage shall not be less than the type and limits designated herein, and the Contractor and/or Subcontractors agree that the coverage or the acceptance by the City of Certificates of Insurance indicating the type and limits of insurance shall in no way limit the liability of the Contractor and/or subcontractor to any such type and limits of insurance coverage.

The insurance coverage hereinafter afforded by the Contractor and/or subcontractor shall be primary insurance, except when stated to apply in excess of or contingent upon the absence of other insurance. The amount and type of insurance shall not be reduced by the existence of other insurance's held by the City.

The Contractor and/or Subcontractor shall provide coverage's that are not impaired or the aggregate is not to impaired by any other risk, past or present, and the limits required, shall be fully available to the City of Meriden of restored if depleted below the required levels during the course of the contract and/or any extensions thereto.

The Contractor and/or Subcontractor shall not commence work under the terms of this contract until they have obtained the liability insurance coverage required by this article and has filed Certificates of Insurance on same with the City, and the City has approved the Certificates of Insurance and the represented coverage.

Each Certificate of Insurance shall include the following pertinent information:

- Name of Insurance Carrier writing policy
- Name Insured
- Address of Named Insured
- Description of coverage (Workers' Compensation certificates should evidence the state(s)of operation including Connecticut)
- Policy Periods (effective and expiration dates)
- Limits of liability and terms
- Brief description of operations performed and property covered
- Name and address of certificate holder
- Authorized agent's name and address
- Date and signature of the issuing agent (original only)
- All additional named insured endorsement
- All cross liability endorsements
- All indemnification and hold harmless agreements (must be supported by Contractual Liability Insurance)

Each insurance policy (with the exception of OCP shall contain an endorsement naming the City as an Additional Insured, evidence of a Cross Liability endorsement so that each insureds interests are considered and treated separately in the case of claims between the insureds. The Contractor shall provide 60 Day advance Notification** to the City in the event of any material change, modification, cancellation, or non-renewal of insurance coverage.** **Amended 01/13/14

The Contractor and/or Subcontractors shall include a waiver of subrogation rights, on all insurance policies, so that the City of Meriden cannot be sued by the Contractor's insurer to recover any payments made on behalf of the Contractor and/or Subcontractor.

All insurance policies provided by the Contractor and/or Subcontractors shall include an endorsement indicating that any breach of warranty, by the named insured, will not be imputed to another insured.

During the course of execution of the work, whenever there is a lapse in the insurance requirements as stated herein, through cancellation, expiration, failure to renew , or any other cause, the City shall order the cessation of all activities** until such time as the insurance requirements are complied with. The Contractor shall have no claim or claims whatever against the City, or other parties to the contract. **Amended 01/13/14

The Contractor and their Subcontractors shall indemnify and save harmless the City of Meriden, and all additional named insured and all appointed or elected officers, officials, directors, committee members, employees, volunteer workers, commissioners, and any affiliated, associated, or allied entities and/or bodies of, or as may be participated in by the City of Meriden, or as may now or hereinafter be constituted or established from and against all claims, damages, and losses and expenses including attorney's fees arising out of or resulting from the performance of the work under this contract, provided that any such claims, damage, loss or expense is attributable to bodily injury, sickness, disease or death, or to injury to, or destruction of tangible property, including the loss of use resulting therefrom; and is caused in whole or in part by any negligent or willful act or omission of the Contractor, and their Subcontractors, anyone directly or indirectly employed by any of them or anyone for whose acts any of them may be liable.

The Contractor and their Subcontractors shall, during the execution of the work, take necessary precautions and place proper guards for the prevention of accidents; shall set up all night suitable and sufficient lights and barricades; shall fully comply with the latest revisions of the Occupational Safety and Health Act of 1970 and all other Federal, State and Local Regulations, including any all amendments, revisions, and additions thereto, and shall indemnify and save harmless the City of Meriden and their additional named insured and their employees, officers, agents from any and all claims, suits, actions, fines, fees, damages, and costs to which they may incur by reason of death or injury to all persons and/or for all property damage of another resulting from non-compliance, unskillfulness, willfulness. negligence, or carelessness in the execution of the work, or in guarding or protecting the same, or from any improper methods, materials, implements or appliances used in execution of the work, or by or on account of any direct or indirect act or omission of the Contractor of their Subcontractors or their employees or agents.

The Contractor shall be responsible for initiating, maintaining, and supervising all safety precautions and programs in connection with the execution of the contract.

The Contractor shall take all reasonable precautions for the safety of, and shall provide all reasonable protection to prevent damage, injury, or loss to; 1) all employees on the work and all other persons who may be affected thereby; 2) all the work and all the materials and equipment to be incorporated therein, whether in storage in or on the site, under the care, custody, or control of the Contractor or any of their Subcontractors; and 3) other property at the site or adjacent thereto, including trees, shrubs, lawns, walks, pavements, roadways, structures, and utilities not designed for removal, relocation, or replacement in the course of construction.

The Contractor shall erect and maintain, as required by existing conditions and progress of the work, all reasonable safeguards for safety and protection, including posting danger signs and other warnings against hazards promulgating safety regulations and notifying owners and users of adjacent utilities.

The Contractor and/or subcontractor shall give all notices and comply with all applicable laws, ordinances, rules, regulations, and lawful orders for any public authority bearing on the safety of persons or property or their protection from damage, injury, or loss.

When The use or storage of explosives or other hazardous materials or equipment is necessary for the execution of work, the Contractor and/or their Subcontractors shall exercise the utmost care and shall carry on such activities under the supervision of properly qualified personnel.

The contractor shall designate a responsible member of their organization at the site whose duty shall be the prevention of accidents. This person shall be the Contractor's superintendent unless otherwise designated by the Contractor in writing to the City.

In any emergency affecting the safety of persons or property, the Contractor shall act to prevent threatened damage, injury, or loss.

The Contractor, Subcontractor, and their insurer(s) shall waive governmental immunity as a defense and shall not use the defense of governmental immunity in the adjustment of claims or in the defense of any suit, action or claim brought against the City. Nothing shall limit the City of Meriden from utilizing the defense of governmental immunity.

Insurance Requirements

Contractor shall agree to maintain in force at all times during the contract the following minimum coverages and shall name the City of Meriden as an Additional Insured on a primary and non-contributory basis to all policies except Workers Compensation. All policies should also include a Waiver of Subrogation. Insurance shall be written with Carriers approved in the State of Connecticut and with a minimum AM Best's rating of "A-"VIII. In addition, all Carriers are subject to approval by the City of Meriden.

		(Minimum Limits)
General Liability	Each Occurrence	$1,000,000
	General Aggregate	$2,000,000
	Products/Completed Operations Aggregate	$2,000,000
Auto Liability	Combined Single Limit Each Accident Including Endorsements:	$1,000,000
Umbrella (Excess Liability)	Each Occurrence	$3,000,000
	Aggregate	$3,000,000
Professional Liability	Each Claim or Each Occurrence	$1,000,000
	Aggregate	$1,000,000
Pollution Liability	Each Claim or Each Occurrence	$1,000,000
	Aggregate	$1,000,000
	• No asbestos/lead exclusion	
Workers' Compensation and Employers' Liability	WC Statutory Limits	
	EL Each Accident	$1,000,000
	EL Disease Each Employee	$1,000,000
	EL Disease Policy Limit	$1,000,000

If any policy is written on a "Claims Made" basis, the policy must be continually renewed for a minimum of two (2) years from the completion date of this contract. If the policy is replaced and/or the retroactive date is changed, then the expiring policy must be endorsed to extend the reporting period for claims for the policy in effect during the contract for two (2) years from the completion date.

Original, completed Certificates of Insurance must be presented to the City prior to contract issuance. Contractor agrees to provide renewal certificates at least 30 days prior to the expiration date of the policies. Should any of the above described policies be cancelled, limits reduced or coverage altered 30 day written notice must be given to the City.

Article 6 Substitutes and "or equals"

Article 6.05.2.A – After Contractor add "or Owner"

Article 6.05.2.2E – Substitute Items - Add the words "If, in the owner's opinion, the number of substitutions is excessive" after "reimburse Owner for the reasonable charges of Engineer for

evaluating each such proposed substitutes".

Add the following paragraph 6.09D:

The requirements of subparagraph 6.09 do not waive the Contractor's responsibility of complying with the requirement of the Contract Documents when such regulations and requirements exceed those of any laws, ordinances, rules, regulations and orders of any public authority bearing the work.

Delete Article 6.10 in its entirety and substitute the following:

Under the terms of Regulation 16, referring to Contractors and Subcontractors issued by the State Tax Commission in administration of the State Sales and Use Tax, the Contractor may purchase materials or supplies to be consumed in the performance of this Contract without payment of Tax and shall not include in his Bid nor charge any Sales or Use Tax on any materials or labor provided.

Amend Article 6.12 to read:

"Contractor shall maintain in a safe place at the Site two (2) record copies…"

Add the following to article 6.13:

6.13.A.4 Protection in general shall consist of the following:

6.13.A.5 The Contractor shall furnish approved hard hats, other personal, protective equipment as required, approved first aid supplies, name of first aid attendant, and a posted list of emergency facilities.

6.13.A.6 The Contractor shall take prompt action to correct any hazardous conditions reported.

6.13.A.7 The Contractor shall be responsible for the adequate strength and safety of all scaffolding, staging and hoisting equipment, and for temporary shoring, bracing and tying.

The Contractor shall comply with the requirements of the Occupational Safety and Health Act of 1970 and the Construction Safety Act of 1969, including all Standards and Regulations which have been promulgated by the Governmental Authorities which administer such acts; and said Requirements, Standards and Regulations are incorporated herein by reference.

The Contractor shall be directly responsible for compliance therewith on the part of its agents employees, material men and Subcontractors, and shall directly receive and be responsible for all citations, assessments, fines or penalties which may be incurred by reason of its agents, employees, material men or Subcontractors, to so comply.

The Contractor shall indemnify the Owner and the Engineer and save them harmless from any and all losses, costs and expenses, including fines and reasonable attorney's fees incurred by the Owner and the Engineer by reason of the real or alleged violation of such laws, ordinances, regulations and directives, Federal, State and local, which are currently in effect or which become effective in the future, by the Contractor, his Subcontractors or material men.

6.16 <u>Emergencies</u>

Add 6.16.B – The Contractor shall provide the Owner with at least two (2) phone numbers in case of

emergency.

Article 8 – Replacement of Engineer
Delete 8.02 in its entirety

8.06 – Insurance
8.06A – Delete Article 5, Add Supplemental General Conditions

Article 9 - Engineer's Status During Construction
Revise 9.03.B to read:

In addition to the Engineer, The Owner may employ a Clerk-of- the Works shall be authorized to observe all material, workmanship and equipment for compliance with the Contract Documents' requirements of tests and safety provisions, and report any variance to the Engineer. He shall have no authority to interpret, vary or suspend the requirements of the Contract.

The Clerk-of-the-Works will keep records of material deliveries, weather conditions and manpower; he will monitor compliance with the approved Construction Schedule and the Equal Employment Provisions.

The Contractor shall cooperate with the Clerk-of-the-Works in the performance of his duties, and shall provide access to all portions of the work and information required for his records. Any requests for modification of the Contract provisions or working procedures shall be reviewed with the project representative prior to making submittal(s) to the Engineer.

Cost of Work, Allowances; Unit Price Work
Article 11 is hereby modified as follows:

Add the following Articles:

11.03D Delete the entire paragraph and substitute the following:

It is understood and agreed that the prices bid for the various units of construction shall control in any Contract awarded hereafter. The City of Meriden reserves the right to revise the estimated quantities with no fixed limits set nor extra compensation allowed other than the above stated unit prices.

Article 12 – Change of Contract Price and Change of Contract Time

Add the following:

12.01.B.4 - The Contractor, when performing work under article 11.3.3 shall, upon request, promptly furnish in a form satisfactory to the Owner, itemized statements of the cost of the work so ordered, including, but not limited to, certified payrolls, and copies of accounts, bills and vouchers to substantiate the above estimates.

Add 12.04.1 -The Contractor guarantees that he can and will complete the work within the time specified or within the time as extended as provided elsewhere in the Contract Documents. Inasmuch as the damage and loss to the City of Meriden which will result from the failure of the Contractor to complete the work within the stipulated time will be most difficult or impossible of accurate assessment, the damages to

the City for such delay and failure on the part of the Contractor shall be liquidated in the sum of $1,000.00 each calendar day (Sundays and Holidays included) by which the Contractor shall fail to complete the work or any part thereof in accordance with the provisions hereof and such liquidated damages shall not be considered as a penalty. The City will deduct and retain out of any money due to become due hereunder, the amount of liquidated damages, and in case those amounts are less than the amount of liquidated damages, the Contractor shall be liable to pay the difference upon demand by the City.

Article 13 - Warranty and Guarantee; Tests and Inspections; Correction, Removal or Acceptance of Defective Work

Article 13.02 is modified to include the following:

The Contractor shall make every effort to minimize damage to all access routes, and he shall acquire all necessary permits for working in, on or from public streets or rights or way and for securing access rights of their own.

All costs of the removal and restoration to original condition of walls, fences and structures, utility lines, poles, guy wires or anchors, and other improvements required for passage of the Contractor's equipment shall be borne by the Contractor. The Contractor shall notify the proper authorities of the City and all utilities of any intended modifications or disruption to their property prior to the start of construction, and shall cooperate with them in the scheduling and performance of this operation.

Article 14 Payments to Contractor and Completion

Modify 14.02.D.4 to read:
Payments may be withheld to Contractors who are in default through debt or contract to the City.

14.07C – Change "thirty days" to "forty five (45) days"

Delete 14.09A in its entirety.

Article 15 Suspension of work and termination

Delete 15.03.3 in its entirety.

15.04B – Change 30 to 45 and change "30 days to pay" to 60.

Project Manual
Harbor Brook Bridge Replacement and Utility Improvements
Butler Street and Hanover Street

City Project No. B024-48

City of Meriden
Meriden, Connecticut

February 2024

City of Meriden
Purchasing Department, Room 210
142 East Main Street
Meriden, CT 06450

Fuss & O'Neill, Inc.
59 Elm Street, Suite 500
New Haven, CT 06510

THE CONTACT DOCUMENTS FOR THE CONTRACT ENTITLED:

PROJECT MANUAL AND SPECIAL PROVISIONS
HARBOR BROOK
BRIDGE REPLACEMENT AND UTILITY IMPROVEMENTS
BUTLER STREET AND HANOVER STREET

CITY PROJECT NO. B024-48
MERIDEN, CONNECTICUT

INCLUDES: **PAGE**

LEGAL NOTICE

INFORMATION TO BIDDERS

BID PROPOSAL FORMS
BID FORM
NON-COLLUSIVE BID STATEMENT
FORM OF SURETY GUARANTY
BID BOND
BIDDER'S QUALIFICATION STATEMENT
FORM OF AGREEMENT
GENERAL CONDITIONS
SUPPLEMENTAL GENERAL CONDITIONS
PERFORMANCE BOND
LABOR AND MATERIAL PAYMENT BOND
INSURANCE REQUIREMENTS
NONDISCRIMINATION IN EMPLOYMENT
BIDDER CERTIFICATION REGARDING EQUAL EMPLOYMENT OPPORTUNITY
SPECIAL EQUAL OPPORTUNITY PROVISIONS
PRE-AWARD DBE COMMITMENT APPROVAL REQUEST
AFFIRMATIVE ACTION PROGRAM CERTIFICATION
CONTRACTOR'S PROPOSED PROGRESS CHART
ANTICIPATED SOURCE OF MATERIALS
CERTIFICATE OF COMPLIANCE WITH CGS SECTION 31-57B

NOTICES
NOTICE OF AWARD
NOTICE TO PROCEED

SECTION A – SPECIAL PROVISIONS
TABLE OF CONTENTS – NOTICES TO CONRACTOR AND
AMENDED TECHNICAL PROVISIONS

For: **Harbor Brook Improvements – Bridge Replacement and Utility Improvements – Butler Street and Hanover Street**
City of Meriden, Public Works/Engineering Department

To: **Rawle Dummett**
Purchasing Officer
142 East Main Street, Room 210
Meriden, CT 06450-8022

Date of Opening: **May 23, 2024**
11:00 a.m.

The undersigned, _____ doing business in the City/Town of _____ in the State of _____ submits herewith, in conformity with the general instructions, conditions and specifications for the following:

Harbor Brook Improvements – Bridge Replacement and Utility Improvements – Butler Street and Hanover Street

Base Bid						
Item Number	**Item**	**Unit**	**Qty.**	**Unit Prices Bid**		**Total**
				Figure	**Writing**	
Environmental Construction						
0101000A	Environmental Health and Safety	LS	1	$	Dollars Cents	$
0101109A	Hazardous Materials Excavation	CY	950	$	Dollars Cents	$
0101117A	Controlled Materials Handling	CY	2,500	$	Dollars Cents	$
0101126A	Disposal of Hazardous Waste	TON	1,425	$	Dollars Cents	$
0101128A	Securing, Construction, and Dismantling of a Waste Stockpile and Treatment Area	LS	1	$	Dollars Cents	$
0202315A	Disposal of Controlled Materials	TON	3,750	$	Dollars Cents	$
0202318A	Management Reuseable Controlled Materials	CY	2,425	$	Dollars Cents	$
0202640A	2-inch GW Monitoring Well Abandonment	EA	7	$	Dollars Cents	$
					Total Environmental Construction Total Dollars Total Cents	**$**
Alternates - Environmental Construction						
0101130A	Environmental Work Solidification	TON	10	$	Dollars Cents	$

BIDDER'S NAME:_____

Base Bid						
Item Number	Item	Unit	Qty.	Unit Prices Bid		Total
				Figure	Writing	
0101164A	Treatment System Operation	DAY	30	$	Dollars Cents	$
0204213A	Handling Contaminated Groundwater	LS	1	$	Dollars Cents	$
					Total Alternates - Environmental Construction Total Dollars Total Cents	**$**
Butler Street Bridge						
0203000	Structure Excavation – Earth (complete)	CY	803	$	Dollars Cents	$
0213100	Granular Fill	CY	39	$	Dollars Cents	$
0216000	Pervious Structure Backfill	CY	324	$	Dollars Cents	$
0406171	HMA S0.5	TON	22	$	Dollars Cents	$
0406173	HMA S0.25	TON	11	$	Dollars Cents	$
0503001	Removal of Superstructure	LS	1	$	Dollars Cents	$
0514226	Prestressed Deck Units (3'-0"x2'-0") (BI-37 Modified Box Beams)	LF	834	$	Dollars Cents	$
0520036A	Asphaltic Plug Expansion Joint System	CF	20	$	Dollars Cents	$
0521001	Elastomeric Bearings	EA	48	$	Dollars Cents	$
0601062	Footing Concrete	CY	105	$	Dollars Cents	$
0601064	Abutment and Wall Concrete	CY	44	$	Dollars Cents	$
0601118	Bridge Deck Concrete	CY	67	$	Dollars Cents	$
0601121	Parapet Concrete	LF	158	$	Dollars Cents	$
0601122	Bridge Sidewalk Concrete	CY	31	$	Dollars Cents	$
0601123	Approach Slab Concrete	CY	39	$	Dollars Cents	$
0602030	Deformed Steel Bars – Galvanized	LBS	82,502	$	Dollars Cents	$

Base Bid						
Item Number	Item	Unit	Qty.	Unit Prices Bid		Total
				Figure	Writing	
0706001	Micropiles	EA	50	$	Dollars Cents	$
0706002	Verification Test for Micropiles	EA	1	$	Dollars Cents	$
0706003	Proof Test for Micropiles	EA	4	$	Dollars Cents	$
0706004	Micropile Length Adjustment	LF	500	$	Dollars Cents	$
0707009A	Membrane Waterproofing (Cold Liquid Elastomeric)	SY	265	$	Dollars Cents	$
0708001	Dampproofing	SY	75	$	Dollars Cents	$
0819002A	Penetrating Sealer Protective Compound	SY	151	$	Dollars Cents	$
0904051A	3 Tube Curb Mounted Bridge Rail	LF	124	$	Dollars Cents	$
0910173	R-B 350 Bridge Attachment – Vertical Shape Parapet	EA	2	$	Dollars Cents	$
1008319	4” Rigid Metal Conduit in Structure	LF	143	$	Dollars Cents	$
1008320	5” Rigid metal Conduit in Structure	LF	286	$	Dollars Cents	$
					Total Butler Street Bridge Dollars Cents	**$**
Hanover Bridge						
0203000	Structure Excavation – Earth (complete)	CY	762	$	Dollars Cents	$
0213100	Granular Fill	CY	42	$	Dollars Cents	$
0216000	Pervious Structure Backfill	CY	263	$	Dollars Cents	$
0406171	HMA S0.5	TON	17	$	Dollars Cents	$
0406173	HMA S0.25	TON	8	$	Dollars Cents	$
0503001	Removal of Superstructure	LS	1	$	Dollars Cents	$
0514226	Prestressed Deck Units (3’-0”x2’-0”) (BI-37 Modified Box Beams)	LF	624	$	Dollars Cents	$
0520036A	Asphaltic Plug Expansion Joint System	CF	20	$	Dollars Cents	$

BIDDER’S NAME:_____

Base Bid						
Item Number	Item	Unit	Qty.	Unit Prices Bid		Total
				Figure	Writing	
0521001	Elastomeric Bearings	EA	48	$	Dollars Cents	$
0601062	Footing Concrete	CY	78	$	Dollars Cents	$
0601064	Abutment and Wall Concrete	CY	31	$	Dollars Cents	$
0601118N	Bridge Deck Concrete	CY	79	$	Dollars Cents	$
0601121	Parapet Concrete	LF	121	$	Dollars Cents	$
0601122	Bridge Sidewalk Concrete	CY	24	$	Dollars Cents	$
0601123	Approach Slab Concrete	CY	40	$	Dollars Cents	$
0602030	Deformed Steel Bars – Galvanized	LBS	70,839	$	Dollars Cents	$
0706001	Micropiles	EA	50	$	Dollars Cents	$
0706002	Verification Test for Micropiles	EA	1	$	Dollars Cents	$
0706003	Proof Test for Micropiles	EA	4	$	Dollars Cents	$
0706004	Micropile Length Adjustment	LF	500	$	Dollars Cents	$
0707009A	Membrane Waterproofing (Cold Liquid Elastomeric)	SY	224	$	Dollars Cents	$
0708001	Dampproofing	SY	25	$	Dollars Cents	$
0819002A	Penetrating Sealer Protective Compound	SY	120	$	Dollars Cents	$
0904051A	3 Tube Curb Mounted Bridge Rail	LF	89	$	Dollars Cents	$
0910173	R-B 350 Bridge Attachment – Vertical Shape Parapet	EA	2	$	Dollars Cents	$
1008319	4” Rigid Metal Conduit in Structure	LF	108	$	Dollars Cents	$
1008320	5” Rigid metal Conduit in Structure	LF	216	$	Dollars Cents	$
					Total Hanover Bridge Dollars Cents	**$**

BIDDER’S NAME:_____

Base Bid						
Item Number	Item	Unit	Qty.	Unit Prices Bid		Total
				Figure	Writing	
Retaining Wall – Site 1						
0601651A	Retaining Wall – Site 1	LS	1	$	Dollars Cents	$
0213100	Granular Fill	CY	157	$	Dollars Cents	$
0601062	Footing Concrete	CY	179	$	Dollars Cents	$
0601121	Parapet Concrete	LF	240	$	Dollars Cents	$
0913003	4' Polyvinyl Chloride Chain Link Fence	LF	12	$	Dollars Cents	$
0974000	Removal of Existing Masonry	CY	58	$	Dollars Cents	$
					Total Retaining Wall – Site 1 Dollars Cents	**$**
Retaining Wall – Site 2						
0601652A	Retaining Wall – Site 2	LS	1	$	Dollars Cents	$
0213100	Granular Fill	CY	66	$	Dollars Cents	$
0601062	Footing Concrete	CY	64	$	Dollars Cents	$
0913003	4' Polyvinyl Chloride Chain Link Fence	LF	156	$	Dollars Cents	$
0974000	Removal of Existing Masonry	CY	93	$	Dollars Cents	$
					Total Retaining Wall – Site 2 Dollars Cents	**$**
Retaining Wall – Site 3						
0601653A	Retaining Wall – Site 3	LS	1	$	Dollars Cents	$
0213100	Granular Fill	CY	67	$	Dollars Cents	$
0601062	Footing Concrete	CY	76	$	Dollars Cents	$
0601121	Parapet Concrete	LF	60	$	Dollars Cents	$

Base Bid						
Item Number	Item	Unit	Qty.	Unit Prices Bid		Total
				Figure	Writing	
0913003	4' Polyvinyl Chloride Chain Link Fence	LF	49	$	Dollars Cents	$
0974000	Removal of Existing Masonry	CY	163	$	Dollars Cents	$
					Total Retaining Wall – Site 3 Dollars Cents	**$**
Embankment Wall – Site 1						
0203000	Structure Excavation – Earth (complete)	CY	457	$	Dollars Cents	$
0214100	Compacted Granular Fill	CY	12	$	Dollars Cents	$
0216000	Pervious Structure Backfill	CY	26	$	Dollars Cents	$
0601062	Footing Concrete	CY	16	$	Dollars Cents	$
0601064	Abutment and Wall Concrete	CY	34	$	Dollars Cents	$
0602030	Deformed Steel Bars – Galvanized	LB	6,575	$	Dollars Cents	$
0708001	Dampproofing	SY	36	$	Dollars Cents	$
					Total Embankment Wall – Site 1 Dollars Cents	**$**
Embankment Wall – Site 2						
0203000	Structure Excavation – Earth (complete)	CY	442	$	Dollars Cents	$
0214100	Compacted Granular Fill	CY	43	$	Dollars Cents	$
0216000	Pervious Structure Backfill	CY	91	$	Dollars Cents	$
0601062	Footing Concrete	CY	31	$	Dollars Cents	$
0601064	Abutment and Wall Concrete	CY	84	$	Dollars Cents	$
0602030	Deformed Steel Bars – Galvanized	LB	11,187	$	Dollars Cents	$
0708001	Dampproofing	SY	85	$	Dollars Cents	$

BIDDER'S NAME:_____

Base Bid						
Item Number	Item	Unit	Qty.	Unit Prices Bid		Total
				Figure	Writing	
					Total Embankment Wall – Site 2	**$**
					Dollars	
					Cents	
Sanitary Sewer						
0202452A	Test Pits	EA	8	$	Dollars	$
					Cents	
0207000	Borrow	CY	20	$	Dollars	$
					Cents	
1400004	Rock in Trench Excavation 0'-10' Deep (Sanitary Sewer)	CY	10	$	Dollars	$
					Cents	
1400101A	15" PVC Pipe (Sanitary Sewer)	LF	1,020	$	Dollars	$
					Cents	
1401947	Remove Existing Pipe (Sanitary Sewer)	LF	200	$	Dollars	$
					Cents	
1403001A	Manhole (Sanitary Sewer)	EA	8	$	Dollars	$
					Cents	
1403010A	Manhole Frame and Cover (Sanitary Sewer)	EA	5	$	Dollars	$
					Cents	
1403020A	Existing Manhole Frame and Cover Adjustment (Sanitary Sewer)	EA	3	$	Dollars	$
					Cents	
					Total Sanitary Sewer	**$**
					Dollars	
					Cents	
Water						
0202452A	Test Pits	EA	10	$	Dollars	$
					Cents	
0207000	Borrow	CY	50	$	Dollars	$
					Cents	
1300015	Rock in Trench Excavation 0'-10' Deep (Water Main)	CY	10	$	Dollars	$
					Cents	
1300061A	Water Main Support System (Water Main)	LS	1	$	Dollars	$
					Cents	
1301082A	8-inch Ductile Iron Pipe (Water Main)	LF	359	$	Dollars	$
					Cents	
1301084A	10-inch Ductile Iron Pipe (Water Main)	LF	340	$	Dollars	$
					Cents	
1301658A	10-inch Ductile Iron Pipe Install on Bridge (Water Main)	LS	1	$	Dollars	$
					Cents	
1302003A	6-inch Gate Valve (Water Main)	EA	2	$	Dollars	$
					Cents	

BIDDER'S NAME:_____

Base Bid						
Item Number	Item	Unit	Qty.	Unit Prices Bid		Total
				Figure	Writing	
1302059A	Adjust Gate Box	EA	1	$	Dollars Cents	$
1302204A	6x6x6 Tapping Sleeve and Valve (Water Main)	EA	1	$	Dollars Cents	$
1302206A	8x8x8 Tapping Sleeve and Valve (Water Main)	EA	2	$	Dollars Cents	$
1302208A	10x10x10 Tapping Sleeve and Valve (Water Main)	EA	1	$	Dollars Cents	$
1302931A	Water Main Insulation (Cover)	LF	11	$	Dollars Cents	$
1303198A	Hydrant (Water Main)	EA	1	$	Dollars Cents	$
1302300A	10” Connection to Hanover Street (Water Main)	EA	1	$	Dollars Cents	$
1302301A	8’ Connection to Cherry Street (Water Main)	EA	1	$	Dollars Cents	$
					Total Water Dollars Cents	**$**
Floodproofing – 111 Hanover Street						
0519004A	Floodproof Doors and Windows	LS	1	$	Dollars Cents	$
0519010A	Waterproofing Membrane	SF	1,200	$	Dollars Cents	$
0519020A	Sealing Pipe Penetrations	LS	1	$	Dollars Cents	$
0519030A	Flood Barriers for Openings	EA	6	$	Dollars Cents	$
					Total Floodproofing – 111 Hanover Street Dollars Cents	**$**
Floodproofing – 124 Hanover Street						
0519004A	Floodproof Doors and Windows	LS	1	$	Dollars Cents	$
0519010A	Waterproofing Membrane	SF	2,200	$	Dollars Cents	$

Base Bid						
Item Number	Item	Unit	Qty.	Unit Prices Bid		Total
				Figure	Writing	
0519020A	Sealing Pipe Penetrations	LS	1	$	Dollars Cents	$
0519030A	Flood Barriers for Openings	EA	8	$	Dollars Cents	$
0601064	Concrete Walls	CY	3	$	Dollars Cents	$
					Total Floodproofing – 124 Hanover Street Dollars Cents	**$**
Floodproofing – 618 South Grove Street						
0519004A	Floodproof Doors and Windows	LS	1	$	Dollars Cents	$
0519010A	Waterproofing Membrane	SF	3,800	$	Dollars Cents	$
0519020A	Sealing Pipe Penetrations	LS	1	$	Dollars Cents	$
0519030A	Flood Barriers for Openings	EA	12	$	Dollars Cents	$
					Total Floodproofing – 618 South Grove Street Dollars Cents	**$**
Drainage Improvements						
0586500.10	4-Ft Dia. Storm Manhole (0-10')	EA	2	$	Dollars Cents	$
0586501.06	6-Ft Dia. Storm Manhole (0-10')	EA	1	$	Dollars Cents	$
0586501.07	7-Ft Dia. Storm Manhole (0-10')	EA	3	$	Dollars Cents	$
0586502.08	8-Ft Dia. Storm Manhole (0-20')	EA	1	$	Dollars Cents	$
0586041.10	C-L Catch Basin (4' Sump) – 0-10' Deep	EA	8	$	Dollars Cents	$
0586002.10	C Catch Basin (4' Sump) – 0-10' Deep	EA	8	$	Dollars Cents	$
0586000	Reset CB	EA	1	$	Dollars Cents	$

Base Bid						
Item Number	Item	Unit	Qty.	Unit Prices Bid		Total
				Figure	Writing	
0586650	Reset Manhole	EA	3	$	Dollars Cents	$
0586700	Convert Type ‘C-L’ CB to Type ‘C’ CB	EA	2	$	Dollars Cents	$
0586703	Convert Type ‘C’ CB to MH	EA	2	$	Dollars Cents	$
0686000.15	15” RCP (0-10’ Deep)	LF	158	$	Dollars Cents	$
0686000.18	18” RCP (0-10’ Deep)	LF	56	$	Dollars Cents	$
0686000.36	36” RCP (0-10’ Deep)	LF	7	$	Dollars Cents	$
0686000.48	48” RCP (0-10’ Deep)	LF	19	$	Dollars Cents	$
0686001.48	48” RCP (0-20’ Deep)	LF	76	$	Dollars Cents	$
0686230.12	12” HDPE (0-10’ Deep)	LF	166	$	Dollars Cents	$
0686230.15	15” HDPE (0-10’ Deep)	LF	23	$	Dollars Cents	$
0686230.18	18” HDPE (0-10’ Deep)	LF	247	$	Dollars Cents	$
0686230.24	24” HDPE (0-10’ Deep)	LF	115	$	Dollars Cents	$
0686230.36	36” HDPE (0-10’ Deep)	LF	53	$	Dollars Cents	$
0686700.15	15’ Concrete Drainage Pipe End	EA	1	$	Dollars Cents	$
0686700.48	48” Concrete Drainage Pipe End	EA	1	$	Dollars Cents	$
0703011	Intermediate Rip Rap (Stilling Basin)	CY	20	$	Dollars Cents	$
					Total Drainage Improvements Dollars Cents	**$**

BIDDER’S NAME:_____

Base Bid						
Item Number	Item	Unit	Qty.	Unit Prices Bid		Total
				Figure	Writing	
Utilities						
1500000A	Utility Allowance	AL	1	$160,000	One Hundred Sixty Thousand Dollars Zero Cents	$160,000.00
1500046A	Tel/Data Ductbank (2x1 Concrete Encased) – Non-Participating			NA		NA
1500176A	Tel/Data Vault – Non-Participating			NA		NA
0001118	Remove Duct Bank - Concrete Encased Electric Ductbank - Participating	LF	430	$	Dollars Cents	$
0001118	Remove Duct Bank - Concrete Encased Tel/Data Ductbank - Participating	LF	565	$	Dollars Cents	$
0202452A	Test Pits	EA	20	$	Dollars Cents	$
1010006A	Tel/Data Handhole	EA	1	$	Dollars Cents	$
1010061	Polymer Concrete Vault - Splicing 3-Phase Primary	EA	1	$	Dollars Cents	$
1017066	Precast Concrete Transformer Pad	EA	1	EA	Dollars Cents	$
1302047A	Reset Gate Box	EA	2	$	Dollars Cents	$
1500041.1A	Electric Ductbank (2x1 Concrete Encased) - Participating	LF	50	$	Dollars Cents	$
1500041.2A	Electric Ductbank (2x2 Concrete Encased) - Participating	LF	305	$	Dollars Cents	$
1500041.4A	Electric Ductbank (4x1 Concrete Encased) - Participating	LF	150	$	Dollars Cents	$
1500041.8A	Electric Ductbank (4x2 Concrete Encased) - Participating	LF	100	$	Dollars Cents	$
1500046A	Tel/Data Ductbank (2x1 Concrete Encased) – Participating	LF	500	$	Dollars Cents	$
1500140A	Gas Relocation	LS	1	$	Dollars Cents	$
1500175A	Electric Vault – Participating	EA	2	$	Dollars Cents	$
1500176A	Tel/Data Vault – Participating	EA	1	$	Dollars Cents	$

BIDDER'S NAME:_____

Base Bid						
Item Number	Item	Unit	Qty.	Unit Prices Bid		Total
				Figure	Writing	
					Total Utilities	**$**
					Dollars	
					Cents	
General Construction						
0090086A	Removal of Concrete Bollards	EA	5	$	Dollars Cents	$
0100600A	Construction Access	LS	1	$	Dollars Cents	$
0101181A	Emergency Spill Equipment	EA	1	$	Dollars Cents	$
0201001A	Clearing and Grubbing	LS	1	$	Dollars Cents	$
0201451A	Temporary Protective Fence	LF	2000	$	Dollars Cents	$
0202000A	Earth Excavation	CY	7,500	$	Dollars Cents	$
0202200A	Channel Excavation - Earthwork	CY	180	$	Dollars Cents	$
0202216A	Excavation and Reuse of Existing Channel Bottom Material	CY	70	$	Dollars Cents	$
0202401A	Removal of Temporary Pavement	SY	5,500	$	Dollars Cents	$
0202450A	Video Inspection Survey and Report	LS	1	$	Dollars Cents	$
0202452A	Test Pits	EA	3	$	Dollars Cents	$
0202483A	Removal of Bituminous Curb	LF	2,200	$	Dollars Cents	$
0202502A	Removal of Concrete Building Slab	SY	750	$	Dollars Cents	$
0202503A	Removal of Concrete Curbing	LF	200	$	Dollars Cents	$
0202512	Cut Concrete Sidewalk	SY	60	$	Dollars Cents	$
0202513A	Removal of Concrete Sidewalk	SY	420	$	Dollars Cents	$
0202515A	Removal of Concrete Apron	SY	60	$	Dollars Cents	$

BIDDER'S NAME:_____

Base Bid						
Item Number	Item	Unit	Qty.	Unit Prices Bid		Total
				Figure	Writing	
0202529	Cut Bituminous Concrete Pavement	LF	1,700	$	Dollars Cents	$
0202530A	Removal of Bituminous Surface	SY	8,000	$	Dollars Cents	$
0204139	Cofferdam Material Left in Place	LF	110	$	Dollars Cents	$
0204151A	Handling Water	LS	1	$	Dollars Cents	$
0211100	Anti-Tracking Pad	SY	435	$	Dollars Cents	$
0212000	Subbase	CY	200	$	Dollars Cents	$
0212001A	Reused Subbase	CY	200	$	Dollars Cents	$
0214100	Compacted Granular Fill	CY	180	$	Dollars Cents	$
0219001	Sedimentation Control System	LF	2,890	$	Dollars Cents	$
0219005A	Sedimentation Control Coir Fiber Roll System	LF	3,605	$	Dollars Cents	$
0219011A	Sediment Control System at Catch Basin	EA	43	$	Dollars Cents	$
0286000.10A	Rock in Drainage Trench Excavation	CY	300	$	Dollars Cents	$
0304002	Processed Aggregate Base	CY	880	$	Dollars Cents	$
0304003A	Reused Processed Aggregate Base	CY	255	$	Dollars Cents	$
0406171	HMA S0.5	TON	945	$	Dollars Cents	$
0406172	HMA S0.375	TON	945	$	Dollars Cents	$
0601020	Stamped Concrete Driveway Apron	SY	80	$	Dollars Cents	$
0703011	Intermediate Riprap	CY	380	$	Dollars Cents	$

BIDDER'S NAME:_____

Base Bid						
Item Number	Item	Unit	Qty.	Unit Prices Bid		Total
				Figure	Writing	
0703012	Modified Riprap	CY	230	$	Dollars Cents	$
0755009	Geotextile	SY	3,500	$	Dollars Cents	$
0811005	Concrete Wheel Stop	EA	2	$	Dollars Cents	$
0815001	Bituminous Concrete Lip Curbing	LF	1,800	$	Dollars Cents	$
0822100.01	Temporary Traffic Barrier	LF	140	$	Dollars Cents	$
0901003A	Steel Bollard	EA	7	$	Dollars Cents	$
0901006A	Remove and Reset Concrete Bollards	EA	5	$	Dollars Cents	$
0910300	Metal Beam Rail (Type R-B MASH)	LF	400	$	Dollars Cents	$
0910301	Metal Beam Rail (Type R-B MASH Half Post Spacing)	LF	31.25	$	Dollars Cents	$
0910892	R-B Mash Bridge Attachment – Trailing End	EA	2	$	Dollars Cents	$
0911924	R-B End Anchorage Type II	EA	2	$	Dollars Cents	$
0912503	Remove Metal Beam Rail	LF	420	$	Dollars Cents	$
0913000	Remove Chain Link Fence	LF	990	$	Dollars Cents	$
0913003	4’ Polyvinyl Chloride Chain Link Fence	LF	265	$	Dollars Cents	$
0915000A	Tree Protection	EA	5	$	Dollars Cents	$
0921001	Concrete Sidewalk	SF	1,700	$	Dollars Cents	$
0921005	Concrete Sidewalk Ramp	SF	1,190	$	Dollars Cents	$
0921007A	Monolithic Concrete Sidewalk and Curb	SF	4,820	$	Dollars Cents	$

BIDDER’S NAME:_____

Base Bid						
Item Number	Item	Unit	Qty.	Unit Prices Bid		Total
				Figure	Writing	
0921048	Detectable Warning Surface	SF	140	$	Dollars Cents	$
0922001	Bituminous Concrete Sidewalk	SY	9	$	Dollars Cents	$
0939001	Sweeping for Dust Control	HR	360	$	Dollars Cents	$
0942001	Calcium Chloride for Dust Control	TON	5	$	Dollars Cents	$
0944000	Furnishing and Placing Topsoil	SY	9900	$	Dollars Cents	$
0949948	Gleditsia Tricanthanos Inermis – Thornless Honeylocust 2.5”-3” Cal.	EA	6	$	Dollars Cents	$
0949298	Fothergilla Gardenii "Blue Mist" - Dwarf Fothergilla 24-30"	EA	6	$	Dollars Cents	$
0949897	Ilex Glabra "Shamrock" - Shamrock Inberry 24-30"	EA	10	$	Dollars Cents	$
0949227	Ilex Verticillata "Red Sprite" - Red Sprite Winterberry 24"-30"	EA	4	$	Dollars Cents	$
0949228	Ilex Verticillata "Jim Dandy" - Jim Dandy Winterberry 24"-30"	EA	1	$	Dollars Cents	$
0949261	Juniperus Horizontalis "Bar Harbor" - Bar Harbor Spreading Juniper 18-24" Sprd.	EA	11	$	Dollars Cents	$
0950013	Erosion Control Matting	SY	155	$	Dollars Cents	$
0950019A	Turf Establishment Lawn	SY	9,900	$	Dollars Cents	$
0969060A	Construction Field Office, Small	MO	18	$	Dollars Cents	$
0975003	Mobilization and Project Closeout	LS	1	$	Dollar Cents	$
0970006	Traffic Person (Municipal Police Officer)	HR	400	$	Dollars Cents	$
0971001A	Maintenance and Protection of Traffic (2%)	LS	1	$	Dollars Cents	$

BIDDER’S NAME:_____

Base Bid						
Item Number	Item	Unit	Qty.	Unit Prices Bid		Total
				Figure	Writing	
0971000	MPT Allowance	LS	1	$7,500.00	Seven Thousand Five Hundred Dollars Zero Cents	$7,500.00
0978002	Traffic Drum	EA	60	$	Dollars Cents	$
0979003	Construction Barricade Type III	EA	35	$	Dollars Cents	$
0981100	42” Traffic Cone	EA	50	$	Dollars Cents	$
0980020	Construction Surveying	LS	1	$	Dollar Cents	$
0999002	Disposal of Buildings - Gazebo	LS	1	$	Dollars Cents	$
1001001	Trenching and Backfilling	LF	1,200	$	Dollars Cents	$
1002103	Light Standard Foundation – Concrete	EA	14	$	Dollars Cents	$
1003585	Decorative Light Pole with Single Luminaire – New Lights	EA	7	$	Dollars Cents	$
1003904	Relocate Light Standard – Salvaged Lights	EA	7	$	Dollars Cents	$
1003913	Remove Wood Service Pole - Utility Pole	EA	1	$	Dollars Cents	$
1003924	Remove Light Standard and Concrete Base	EA	16	$	Dollars Cents	$
1008127	2” Polyvinyl Chloride Conduit in Trench	LF	1,700	$	Dollars Cents	$
1010038	Precast Polymer Concrete Handhole (36”x36”)	EA	10	$	Dollars Cents	$
1012038	No. 8 Single Conductor	LF	1,700	$	Dollars Cents	$
1017011	Remove Electric Equipment - Electric Switch	EA	1	$	Dollars Cents	$
1106004	2 Way Pedestrian Signal Pedestal Mounted - Reinstalled	EA	1	$	Dollars Cents	$
1131002	Remote Control Changeable Message Sign	DAY	30	$	Dollars Cents	$
1206023	Removal and Relocation of Existing Signs	LS	1	$	Dollars Cents	$
1208931A	Sign Face – Sheet Aluminum (Type 1X Retroreflective Sheeting)	S	25	$	Dollars Cents	$

BIDDER’S NAME:_____

Base Bid						
Item Number	Item	Unit	Qty.	Unit Prices Bid		Total
				Figure	Writing	
1208996	Metal Sign Post	EA	7	$	Dollars Cents	$
1209007	Painted Pavement Markings 8” Yellow	LF	370	$	Dollars Cents	$
21210101	4” Whtie Epoxy Resin Pavement Markings	LF	2,200	$	Dollars Cents	$
1210102	4” Yellow Epoxy Resin Pavement Markings	LF	550	$	Dollars Cents	$
1210105	Epoxy Resin Pavement Markings, Symbols and Legends	SF	1,615	$	Dollars Cents	$
1210106	12” White Epoxy Resin Pavement Markings	LF	180	$	Dollars Cents	$
1220027	Construction Signs	SF	251	$	Dollars Cents	$
					Total General Construction Dollars Cents	**$**

BIDDER’S NAME:_____

BASE BID ITEM TOTALS SUMMARY

Environmental Construction	**$**
Alternates – Environmental Construction	**$**
Butler Bridge	**$**
Hanover Bridge	**$**
Retaining Wall (Site 1)	**$**
Retaining Wall (Site 2)	**$**
Retaining Wall (Site 3)	**$**
Embankment Wall (Site 1)	**$**
Embankment Wall (Site 2)	**$**
Sanitary Sewer	**$**
Water	**$**
Floodproofing – 111 Hanover Street	**$**
Floodproofing – 124 Hanover Street	**$**
Floodproofing – 618 South Grove Street	**$**
Drainage Improvements	**$**
Utilities	**$**
General Construction	**$**

TOTAL BASE BID	**$**
Dollars	
Cents	

BIDDER'S NAME:_____

NOTICE TO CONTRACTOR - ENVIRONMENTAL INVESTIGATIONS

Environmental site investigations have been conducted that involved the sampling and laboratory analysis of soil, sediment, and groundwater collected from various locations and depths within the Project limits. Results of the environmental investigation indicated the following within the Project limits:

- Extractable petroleum hydrocarbons (ETPH), semi-volatile organic compounds (SVOCs), metals, and volatile organic compounds (VOCs) at concentrations exceeding the applicable Connecticut Department of Energy and Environmental Protection (DEEP) Remediation Standard Regulations (RSRs) numeric criteria in soil.

- ETPH, SVOCs, lead, pesticides, and VOCs in sediment. Some of the concentrations of these constituents may exceed the RSR numeric criteria.

- Surface water/groundwater impacted with VOCs, SVOCs, and metals at levels that prevent discharge without prior treatment in accordance with a DEEP discharge permit.

Based on the findings of the environmental investigations, five (5) Areas of Environmental Concern (AOECs) exist within the Project limits. The Contractor is hereby notified that Controlled Material (soil, sediment, surface water, groundwater) within the AOECs will require special management and/or disposal procedures.

With the exception of AOEC-01, AOEC-05, and AOEC-5A, all suitable Controlled Material excavated from the AOECs may be reused only from the AOEC from which it was excavated or as backfill above the water table at AOEC-05 or AOEC-5A after excavation of these AOECs occurs as shown on Sheets HM-101, HM-102. Soil excavated from AOEC-05 and AOEC-5A for construction shall be disposed of at an off-site permitted facility. Concentrations of VOCs and lead in soil excavated from AOEC-5A may exceed RCRA Regulated Thresholds and may need to be disposed of by a licensed hazardous waste transporter and disposed of at an EPA-permitted and Department-approved hazardous waste landfill within 90 days from the date of generation.

Controlled Material excavated from the soil AOECs that is to be reused may be temporarily stockpiled adjacent to the excavation for immediate reuse or transported to temporary stockpile location acceptable the Engineer. Only the volume of soil that is reasonably estimated to be reused within the AOEC may be stockpiled in this way. Controlled Material reused within a AOEC shall be reused in accordance with the following conditions: 1) such material is deemed to be structurally suitable for use as fill by the Engineer, 2) such material is not placed below the water table, and 3) such material is not placed in an area subject to erosion. Soil within the AOEC shall be reused on-site prior to the use of other soil minimizing the quantity of material requiring off-site disposal.

Excess Controlled Material from the soil and sediment AOECs that cannot be reused within its originating AOEC, AOEC-5 and 5A (following excavation of these AOECs as shown on Sheet HM-102 and CP-103) must be transported to a waste stockpile area (WSA) and placed within a designated storage bin for waste characterization. WSA locations are shown on the Project plans. The WSA's are to be used exclusively for temporary stockpiling of excavated materials from within the AOECs for determination of disposal classification. No other materials shall be stored within the WSA's. Any excavated material within the Project limits that contains free draining liquids shall be dewatered and handled in accordance with Item No. 0101130A – Environmental Work – Solidification, as may be necessary prior to off-site disposal.

In addition, "Low Level" AOECs (LLAOECs) exist with the Project limits, where the concentration of compounds detected are below the RSR numeric criteria. The presence of these compounds at these concentrations will not require material-handling measures beyond those required for normal construction operations. The presence of these compounds at these concentrations will require the disposition of soils excavated from these areas to be restricted as described herein. Material excavated from LLAOECs that cannot be reused from within the area of excavation shall be used as backfill above the water table at AOEC-05 and 5A following excavation of these AOECs as shown on Sheet HM-102 in accordance with Item No. 0202318A – Management of Reuseable Controlled Material.

The City of Meriden, as Generator, will provide an authorized representative to sign all manifests and waste profile documentation required by disposal facilities for disposal of polluted soil, sediment, and groundwater.

The DEEP groundwater classification beneath the project area is GB. Samples of surface water and groundwater were collected and submitted to the laboratory for analysis of constituents of concern. The results from this sampling should be considered representative of groundwater/surface water that might be handled and managed during construction.

Surface water and groundwater encountered at the AOECs may require containment and treatment prior to discharge, or off-site disposal at a treatment facility in accordance with Item No. 0101164A – Treatment System Operation and Item No. 0204213A – Handling Contaminated Groundwater.

Wastewater generated during dewatering activities may be contaminated and shall be discharged in accordance with the DEEP General Permit for Discharge of Remediation Wastewater. The Contractor shall contain wastewater and deploy best practical methods to control suspended solids prior to discharge. The discharge shall be monitored (visually and chemically) in accordance with the General Permit.

The Contractor will be required to implement appropriate health and safety measures <u>for all construction activities</u> to be performed within the AOECs. These measures shall include, but are not limited to, air monitoring, engineering controls, personal protective equipment and decontamination, equipment decontamination and personnel training. WORKER HEALTH AND SAFETY PROTOCOLS WHICH ADDRESS POTENTIAL AND/OR ACTUAL RISK OF

EXPOSURE TO SITE SPECIFIC HAZARDS IS SOLELY THE RESPONSIBILITY OF THE CONTRACTOR.

The Sections which shall be reviewed by the Contractor include, but are not limited to, the following:

- Item No. 0101000A - Environmental Health and Safety
- Item No. 0101117A - Controlled Materials Handling
- Item No. 0101109A – Hazardous Materials Excavation
- Item No. 0101126A – Disposal of Hazardous Waste
- Item No. 0101128A - Securing, Construction, and Dismantling of a Waste Stockpile and Treatment Area
- Item No. 0101130A - Environmental Work – Solidification
- Item No. 0101164A – Treatment System Operation
- Item No. 0202315A - Disposal of Controlled Materials
- Item No. 0202318A – Management Reusable Controlled Materials
- Item No. 0202640A – 2in GW Monitoring Well Abandonment
- Item No. 0204213A - Handling Contaminated Groundwater

An environmental consultant will be on site for excavation activities within the AOECs, to collect soil, sediment, and groundwater samples (as necessary), and to observe site conditions for the City.

Information pertaining to the results of the environmental investigations discussed can be found in the documents listed below and shall be available for review at the Public Works Department, 142 East Main Street, Meriden, Connecticut and digital download.

- Phase III Environmental Site Assessment Harbor Brook Channel Improvement Project Cooper Street Bridge to Amtrak Crossing, Meriden Connecticut, Fuss & O'Neill, Inc. November 2021.

The results contained in the environmental investigation reports listed show levels of various contaminants that the Contractor may encounter during construction. Actual levels found during construction may vary and such variations will not be considered a change in condition provided the material can still be disposed as non-hazardous at one or more of the disposal facilities listed in Item No. 0202315A - Disposal of Controlled Materials.

Provided as separate electronic file

Phase III Environmental Site Assessment
January 2021 - Revised November 2021

NOTICE TO CONTRACTOR – SPECIAL PROVISIONS

All construction under this contract shall adhere to and comply with the Department of Transportation, Form 818, "Standard Specifications for Roads, Bridges, and Incidental Construction", 2023, including the most recent supplements thereto unless otherwise specified in these provisions.

In Form 818, where the words "State of Connecticut", "Department", "ConnDOT", or "CTDOT" appear, it shall be interpreted to mean "City of Meriden" as if inserted therein.

The requirements of these Special Provisions may not be included for separate measurement and payment. Costs associated in conjunction therewith will be considered incidental and included in the cost of the associated item which they pertain.

The reference within these specifications to "Section X.XX" refer to the sections identified on the Table of |Contents Form 818.

The following Notices to Contractor and Special Provisions and Sections of Form 818 are hereby incorporated and made part of this contract.

NOTICE TO CONTRACTOR – CITY OF MERIDEN DISCLAIMER

City of Meriden Request for Proposals and other information and documents which are obtained through the Internet, World Wide Web sites or other sources other than the City of Meriden's website are not to be construed to be official information for the purposes of proposals or conducting other business with the City.

It is the responsibility of each Firm and all other interested parties to obtain all proposal related information and documents from the City of Meriden's website and/or official sources within the City.

Persons and/or entities which reproduce and/or make such information available by any means are not authorized by the City to do so and may be liable for claims resulting from the dissemination of unofficial, incomplete and/or inaccurate information.

NOTICE TO CONTRACTOR – CONTRACT TIME AND LIQUIDATED DAMAGES

Five Hundred Forty-eight (548) calendar days will be allowed for completion of the work, as stated in the Bid Form, on this Contract and the liquidated damages charge to apply will be One Thousand Eight Hundred Dollars ($1,800.00) per calendar day if not completed by the completion date.

NOTICE TO CONTRACTOR – NOISE POLLUTION

The Contractor shall take measures to control the noise intensity caused by his construction operations and equipment, including but not limited to equipment used for drilling, pile driving, blasting, excavation, or hauling.

All methods and devices employed to minimize noise shall be subject to the continuing approval of the Engineer and in accordance with the City of Meriden.

NOTICE TO CONTRACTOR - PROCUREMENT OF MATERIALS

Upon award, the Contractor shall proceed with shop drawings, working drawings, and upon approval, procurement of materials, and all other submittals required to complete the work in accordance with the contract documents.

NOTICE TO CONTRACTOR - GENERAL CONDITIONS OF BIDDING EXAMINATION OF PLANS, SPECIFICATIONS, SPECIAL PROVISIONS & SITE OF WORK

The bidder is required to examine carefully the site of work and the Contract documents including proposal form, plans, special provisions, specifications, supplemental specifications, Contract forms and other Contract documents for the work contemplated, and shall request in writing prior to the bid any clarifications that it deems necessary to prepare its bid. It will be assumed that the bidder has judged for and satisfied itself as to the conditions to be encountered at the site, as to the completeness and requirements of the contract plans and specifications, as to the character, quality and quantities of the work to be performed and materials to be furnished for said work, and as to the requirements of the above contract documents, and in particular, but not limited to, what is required under each Contract item, or under the general cost of the work, or under another or more general Contract item in the absence of particular items. Therefore while clarifications regarding the Contract documents should be expected from time to time during prosecution of the work and unless these clarifications substantially change the scope of the work, in submitting its bid the bidder shall relinquish any claim to additional compensation or time based upon these clarifications of the Contract documents or a misunderstanding or lack of knowledge of the site conditions, the work required or the method of work required.

The subsurface information furnished is based on interpretation of investigations made only at the specific locations indicated, and no assurance is given that these conditions are necessarily typical of other locations or that they have remained unchanged since the field data were obtained. No assurance is given that the presence or absence of water in subsurface explorations at the time of these explorations will be representative of actual conditions at the time of construction. Such subsurface information as was obtained for use in the design of the Project is available on logs provided in the contract documents or will be made available for inspection upon written request

of the bidder. The contractor shall be solely responsible for all assumptions deductions, or conclusions it may make or derive from its examination of any subsurface information or document provided. The furnishing or making available such information does not provide or make any warranty or representation as to the actual conditions that may be encountered or actual quantities or distribution of quantities of work which will be required.

ESTIMATED QUANTITIES

The quantities shown on the proposal form or in the contract documents are approximate only and are given as a basis of evaluation for award of the contract. Provision of these quantities provides no implied guarantee that these quantities shall remain unchanged in the actual construction, and the contractor shall not plead misunderstanding or deception because of any variation (large or small) between estimated and final quantities. The City reserves the right to increase or decrease any or all of the quantities, or completely delete contract items, as shown on the proposal form or in the contract documents as it deems necessary to complete the contract project.

BIDDER'S OBLIGATIONS REGARDING DISCOVERY OF AN ERROR IN THE CONTRACT DOCUMENTS

Any bidder that discovers an error in the bid proposal or contract documents, including but not limited to the plans, must report that error in writing prior to the bid and within two (2) business days of discovering the error. A failure to do so may result in finding the contractor to be non-responsible as the low bidder.

NOTICE TO CONTRACTOR – UTILITY GENERATED SCHEDULE

Project specific utility work schedule(s) will be provided to the City by the utility companies regarding their identified work on this project. These are currently being formalized and will be made available as soon as possible.

The utility scheduling information is provided to assist the Contractor in scheduling its activities. However, the Department does not ensure its accuracy and Section 1.05.06 of the Standard Specifications still is in force.

The utility scheduling information shall be incorporated into the Contractor's pre-award schedule in accordance with the Department's Bidding and Award Manual and Section 1.05.08 of the Contract.

After award, the Contractor shall conduct a utility coordination meeting or meetings to obtain contemporaneous scheduling information from the utilities prior to submitting its bid alternate baseline schedule to the City in accordance with Section (1.05.08 – Schedules and Reports) of the Contract.

The Contractor shall incorporate the contemporaneous utility scheduling information into its

baseline schedule submittal. The baseline schedule shall include Contractor predecessor and successor activities to the utility work in such detail as acceptable to the Engineer.

NOTICE TO CONTRACTOR - EXISTING UTILITIES

Existing utilities shall be maintained during construction. The Contractor shall verify the location of underground, structure mounted and overhead utilities. Construction work within the vicinity of utilities shall be performed in accordance with current safety regulations.

The Contractor shall contact all utilities prior to starting construction.

The Contractor shall notify "Call Before You Dig", telephone: 1-800-922-4455 for the location of public utility underground facilities, in accordance with Section 16-345 of the Regulations of the Department of Public Utility Control.

Contractors are cautioned that it is their responsibility to verify locations, conditions, and field dimensions of all existing features, as actual conditions may differ from information shown on the plans or contained elsewhere in the specifications.

The Contractor shall notify the Engineer prior to the start of his work and shall be responsible for all coordination with the Department. The Contractor shall allow the Engineer complete access to the work.

The Contractor is hereby notified that utility work schedules will have to be accommodated prior to proceeding. The Contractor shall coordinate with the Utility Companies to accommodate his schedule with all utility company schedules. Any inconvenience or delay that may result from the utility company work shall be included in the contract proposal for the work.

All of the existing utility infrastructure must remain in service until the new facilities are acceptable to be put in service. The Contractor shall explore with the utilities this aspect of the project. This condition of serviceability applies to the work being done by the Contractor for the utilities and to work that is being done under the control of the utility.

The Contractor shall keep himself apprised of this work and coordinate activities with the various utilities.

NOTICE TO CONTRACTOR- UTILITY COORDINATION & RELOCATION

Overhead, elevated and/or underground utility lines may be in conflict with required temporary or permanent construction or the equipment necessary to perform this required construction. While efforts will be made by the City and utility owners to minimize conflicts, the contractor is advised to plan his construction methods for work adjacent to, above or underneath existing or relocated utilities. Unless otherwise and specifically noted on the plans or separate utility plans are included with the contract drawings, the contractor should have no expectation that any utility will be relocated either

temporarily or permanently outside the work area or to accommodate the contractor's construction schedule or methods of operations.

With the exception of utility work specifically included for payment in the contract, the coordination and planning of actual utility relocations, either permanent or temporary, are the joint responsibility of the contractor and individual utility owners. If relocation of utilities is required to accommodate the contractor's construction operations, the contractor is required to coordinate the location and timing of all utility relocations with the individual utility owners, and to plan and phase his construction operations accordingly. In addition to field meetings and correspondence, this coordination may include (but is not limited to) negotiations with utility owners regarding what relocations can be made, adjustments of planned construction operations and techniques, staking of locations, excavation and temporary grading, providing access to existing and future utility pole and/or conduit locations, or other physical work as required to allow for utility relocation work. The contractor shall engage in the necessary coordination of utility relocations and associated work at no additional cost to the project or owner, and shall have no right to additional compensation for costs associated with relocation of utilities, working in close proximity to existing or relocated utilities, staging and phasing of his work or for delays as a result of utility relocation work.

NOTICE TO CONTRACTOR- PARTICIPATING UTILITY WORK

Utility work within the City right-of-way will be considered as Non-Participating and Utility work will be performed by the Utilities outside of this Contract. The Contractor will track the items of work and coordinate with the various utilities to complete their work and this effort will be the Contractor's Non-Participating cost. Utility work outside of the City right-of-way on private property that is required for the completion of the project will be considered Participating and will be incorporated into the project pay item for completion of the work. As such, the Contractor will be responsible for all costs for this work. This includes his portion of the work and reimbursement to the various utilities (Gas, Electric and Communications etc.) for their work that is done.

NOTICE TO CONTRACTOR- PERMITS

The Contractor is hereby notified that all permit approvals (contained in these specifications) shall be made a part of this Contract, and that the Contractor shall be bound to comply with all requirements of such permits and permit applications as though the Contractor were the permittee.

The following permits are in effect:

Permit	Expiration Date
Meriden Inland Wetlands and Watercourse Commission	October 11, 2027, the permit will expire if the activity is not authorized by October 11, 2025 unless renewed by the Commission

Permit	Expiration Date
Connecticut Department of Energy and Environmental Protection – Natural Diversity Database Determination (#103077)	November 3, 2025
Connecticut Department of Energy and Environmental Protection – Water Quality Certification (WQC) (201101872) and Non-Consumptive Diversion Permit (201101871-DIV)	Extended to June 26, 2024 Work outside of this date will require a new WQC
Connecticut Department of Energy and Environmental Protection – General Construction Permit	Under Review
US Army Corps of Engineers 404 Individual Wetlands Permit (NAE-2007-2588)	Extended to December 31, 2024

NOTICE TO CONTRACTOR- Cherry Street Site Access

The Contractor is hereby notified that his primary access to the site development will be through the project constructed access from Chery Street. This will assist with separating tenant traffic from construction traffic. During the construction the Cherry Street access is to be realign as indicated.

The Cherry Street access will also potentially provide additional emergency site access during times when the Butler Street and Hanover Street access points are non-operational.

SECTION 1.01 – DEFINITION OF TERMS AND PERMISSIBLE ABBREVIATIONS

Article 1.01.01 is amended as follows:

All references to Commissioner, Department, Engineer and State anywhere within the "Standard Specifications for Roads, Bridges, and Incidental Construction" or within the Supplemental Specifications or Special Provisions shall be interpreted to mean the City of Meriden or a duly authorized agent of the City. Any question or ambiguity regarding any definitions shall be brought to the immediate attention to the City.

City: The City of Meriden, party of the first part to the contract, acting directly or through its agents or employees.

Contract Unit Price: The cost per established unit for each construction item as written in the Proposal Forms.

Special Provisions: Additions and revisions to the Standard and Supplemental Specifications covering conditions specific to this individual project.

The words "as described", "as required", "as permitted", "as directed", or phrases of like effect or import as used herein shall mean that the direction, requirement, permission or allowance of the Engineer is intended, and similarly the words "approved", "reasonable"', "suitable", "properly", "satisfactory", or words of like effect or import, unless otherwise particularly specified herein shall mean approved, reasonable, suitable, properly or satisfactory in the judgment of the Engineer.

Any reference to "Form 818" or "CTDOT Standard Specifications" shall be construed to mean the State of Connecticut, Department of Transportation, Form 818, "Standard Specifications for Roads, Bridges, and Incidental Construction", 2016, including the latest Supplemental Specifications.

SECTION 1.02 – PROPOSAL REQUIREMENTS AND CONDITIONS

Delete the entire section. See **BID PROPOSAL FORM** for information regarding proposal requirements and conditions.

And the following:

1.02.05 The Contractor's attention is directed to the "Notice to Contractor – Utility Generated Schedule", "Notice to Contractor - Existing Utilities" And The "Notice to Contractor-Participating Utility Work" plans and specifications that indicate the utility work to be performed. An allowance for the work completion of this work is established in the Bid Proposal Form.

1.02.06 Utility Allowance

A. Includes Administrative and procedural requirements.

B. Certain materials and equipment that are specified in the Contract Documents.

1. Include installation.

2. Work to be performed by utility company workforces.

a. Participating work includes utility costs and Contractor costs that not located within City right-of-ways or easements, that are reimbursed by the Owner.

b. Non-participating work includes Contractor costs associated with utility work located within the City right-of-ways or easements that are reimbursed by the Owner. Utility costs are not eligible in this category.

C. Types of work to be reimbursed by the allowance for Contractor and Utility company forces.

1. Unit price,

2. Lump sum,

3. Time and Materials

4. Utility Invoices

D. Submittals

1. Submit proposals for purchase of products or systems included in allowances, in the form specified for Change Orders.

2. Submit invoices indicating work performed by utility company workforces.

3. Submit the Contractors manpower and equipment tabulation.

E. Use the utility allowance only as directed by Engineer for Owner's purposes and only by:

1. Change Orders that indicate amounts to be charged to the allowance.

2. Change Orders authorizing use of funds from the utility allowance will include a Contractor's 5% overhead rate and no profit margin for work performed by the utility company.

F. At Project closeout, credit unused amounts remaining in the utility allowance to Owner by Change Order.

G. Schedule of Allowances

1. Item #1500000A Utility Allowance

H. Execution

1. Coordinate workforces to ensure that each allowance item is completely integrated and interfaced with related work. For Non-Participating items, the contractor shall attend meetings, be aware of the utility tentative and actual work schedules. Report to the Engineer and Owner on utility scope of work, progress and costs. Also identify concerns and issues.

2. Coordinate the contractor and utility workforces to ensure that each allowance item is completely integrated and interfaced with related work. The Contractor will work directly with the utilities to coordinate and accomplish the work. For Participating items, the contractor shall attend meetings, be aware of the utility tentative and actual work schedules. Report to the Engineer and Owner on the contractor and utility scope of work, progress and costs. Also identify concerns and issues.

3. It is recommended that a daily accounting and reconciliation of cost items occur between the Contractor and the Engineer.

SECTION 1.07 - LEGAL RELATIONS AND RESPONSIBILITIES

Article 1.07.13 - Contractor's Responsibility for Adjacent Property, Facilities and Services is supplemented as follows:

The following company and representative shall be contacted by the Contractor to coordinate the protection of their utilities on this project 30 days prior to the start of any work on this project involving their utilities:

The Southern New England Telephone Company dba Frontier Communications of Connecticut
Mr. Marino A Limauro Jr.,
Telecommunications Specialist
Outside Network Engineering
4 Hamilton Street
New Haven, CT 06511
Tel. 203-771-3110
E-Mail: marino.a.limauro@ftr.com

The Connecticut Light & Power Company dba Eversource Energy - Electric Distribution
Mr. Michael R. Prentice,
Field Engineering Designer II-I
705 West Johnston Ave
Cheshire, CT 06410
Tel. (203) 271-4794
E-Mail: michael.prentice@eversource.com

Yankee Gas Services Company dba Eversource Energy - Gas Distribution
Mr. Rob Pantalone,
Manager of Construction
107 Selden Street, Mail Stop: NUE2
Berlin, CT 06037
Tel. (203) 317-4401
E-Mail: robert.pantalone@eversource.com

City of Meriden
Mr. Emile Pierides,
Associate City Engineer
142 East Main Street-City Hall
Meriden, CT 06450
Tel. 203-630-4026

SECTION 1.08 - PROSECUTION AND PROGRESS

Article 1.08.03 - Prosecution of Work – Add the following:

The Contractor shall stake the limits of the concrete sidewalks and ramps in conjunction with staking the locations of foundations to ensure that pedestrian push buttons will be located appropriately and will be accessible from a landing area.

The Contractor will not be allowed to install traffic signal or pedestrian heads until the controllers are on hand and ready for installation. Once installation of this equipment commences, the Contractor shall complete this work in a most expeditious manner.

The Contractor shall notify the project engineer on construction projects, or the district permit agent on permit jobs, when all traffic signal work is completed. This will include all work at signalized intersections including loop replacements, adjusting existing traffic signals or any relocation work including handholes. The project engineer or district permit agent will notify the City of Meriden and the Division of Traffic Engineering to coordinate a field inspection of all work. Refer to Section 10.00 – General Clauses for Highway Illumination and Traffic Signal Projects, Article 10.00.10 and corresponding special provision.

CONSTRUCTION PHASING

The Contractor shall construct the project in accordance with the Maintenance and Protection of Traffic (MPT) Plans contained within the Contract Documents and as described in the following requirements.

All slopes, temporary or permanent, shall be stabilized prior to commencing work on the next section unless otherwise directed by the Engineer.

For each of the eight (8) major components of this Contract listed above, the Contractor shall stage construct each component during the stage in which they appear in this Suggested Sequence of Construction unless otherwise directed by the Engineer. The Contractor, however, may commence other work included in this Contract provided that construction procedures will not violate, conflict with or impair the traffic movements for each phase as described in the Special Provision, "Maintenance and Protection of Traffic", its accompanying traffic control plans, and the construction plans forming part of this Contract Document.

In the event of an Engineer approved deviation from the sequence of operations, the Contractor shall immediately notify all Utility Companies on this Contract of any such change.

Stage construction for each of the eight (8) major components of this Contract are described in narrative form below.

I. HARBOR BROOK CHANNEL IMPROVEMENTS GENERAL CONDITIONS AND RESTRICTIONS

1. Primary construction access and staging is to be from Cherry Street. No residential or local access to the site is to be permitted from Cherry Street.
2. Safe and timely pedestrian and vehicular access must be maintained to the residential buildings at 76 Butler Street and 60 and 80 Hanover Streets at all times during construction.
3. Bridges are to be constructed consecutively, such that access to 76 Butler Street and 60 and 80 Hanover Street is maintained at all times during construction.
4. New sewer service must be installed and functional prior to the demolition of Butler Street bridge.
5. Temporary telephone and electric services are required, and are to be coordinated directly with the utility.
6. The project includes utility work to be completed by others. This work is graphically depicted on the plan for the purposes of coordination, and is subject to change based on actual utility installation.

Article 1.08.04 – Limitation of Operations

Add the following:

TIME RESTRICTIONS

In order to provide for traffic operations as outlined in the Special Provision “Maintenance and Protection of Traffic,” the Contractor will not be permitted to perform any work which will interfere with the described traffic operations on all project roadways as follows:

ALL ROADWAYS

On the following State observed Legal Holidays:

New Year's Day

Good Friday, Easter*

Memorial Day

Independence Day

Labor Day

Columbus Day

Thanksgiving Day**

Christmas Day

The following restrictions shall also apply:

On the day before and the day after any of the above Legal Holidays.

*From 6:00 a.m. the Thursday before the Holiday to 8:00 p.m. the Monday after the Holiday.

**From 6:00 a.m. the Wednesday before the Holiday to 8:00 p.m. the Monday after the Holiday.

The Contractor will be required to coordinate with the City of Meriden any construction activities that fall on any City-specified Holidays or other Special Events that are not listed as part of the State observed Legal Holidays.

Bridge Construction - Access must be maintained to privately owned development at all times during construction. During construction of the Butler Street bridge, all traffic must be directed to use the Hanover Street bridge. Conversely during construction of the Hanover Street bridge construction, all traffic must be directed to use the Butler Street bridge.

During All Other Times

The Contractor will be allowed to perform work daily as follows:

- Monday through Friday between 7:00 a.m. and 6:00 p.m.,
- Saturday between 7:00 a.m. and 12:30 p.m.

With the exception of Butler Street, the Contractor will not be allowed to perform any work that will interfere with the existing number of lanes of traffic, including turning lanes at intersections, on:

- Sunday all day (24 hours),
- Access and egress to all adjacent properties shall be maintained at all times,
- A dedicated sidewalk not less than 4 feet in width shall be maintained and protected to allow for the safe passage of pedestrians during all construction phases.

HANOVER STREET

The Contractor will not be allowed to perform any work that will interfere with one lane of alternating traffic on:

- Monday through Friday between 12:00 a.m. and 9:00 a.m. and between 4:00 p.m. and 12:00 a.m.,
- Saturday between 12:00 a.m. and 7:00 a.m. and between 12:30 p.m. and 12:00 a.m. Sunday all day (24 hours).

During the limited period of telephone construction, the Contractor may prohibit parking and maintain one lane of traffic.

BUTLER STREET

The Contractor will not be required to maintain traffic during construction on or adjacent to Butler Street. Barricades for the road closure shall minimize interference with pedestrian sidewalk crossing of Hanover Street.

SIGHT LINE RESTRICTIONS

In accordance with Article 1.07.07 – Public Convenience and Safety, the Contractor will not be permitted to park construction vehicles, including the vehicles of its workers, nor store materials or equipment, in locations on or adjacent to roadways where the sight lines of roadway users are reduced due to such parking or storage of materials and equipment. Such restricted areas may be determined by the Engineer.

OTHER LIMITATIONS

The field installation of a signing pattern shall constitute interference with existing traffic operations and shall not be allowed except during the allowable periods. The Contractor's work schedule should be coordinated on a daily basis with, at a minimum, the City of Meriden inspection personnel, local police and fire departments, and City of Meriden Highways and Engineering. The Contractor's work schedule shall be made available, on a weekly basis, to other impacted road users and local officials, such as: local elected officials, public works personnel, emergency service providers, hospitals, public transit providers, Board of Education transportation coordinators, US Postal Service, etc. The Contractor must submit any revisions to the proposed traffic control plans or any other traffic related changes to the City of Meriden's City Engineer for review and approval at least 30 days prior to implementation. Longitudinal dropdowns in pavement greater than 3 inches will not be allowed during those periods when the maximum number of lanes of through traffic are required. The Contractor shall temporarily provide a 4:1 traversable slope of suitable material in those areas where a longitudinal dropdown exists. The cost of furnishing, installing, and removing this material shall be included in the

contract lump sum for Maintenance and Protection of Traffic. The Contractor's construction equipment shall not obstruct sight lines of the motorists at intersecting roadways and driveways. If this condition cannot be attained in specific locations, a Traffic person shall be utilized.

At no time shall the Contractor close or cause to be closed, any portion of roadway beyond what is stipulated herein, or on the plans as necessary to perform the work. The Contractor's work operations shall be performed in protected construction zones and shall not encroach upon, nor be performed from the vehicular travel way.

The Contractor shall schedule his construction operations, so that construction of weather dependent operations during the period from December 1 through March 31, must be approved by the Engineer prior to constructing the work. The Contractor shall submit, for the review and approval of the Engineer, a detailed Progress Schedule. It shall show all fundamental work times and operations as a function of estimated time periods. This submittal shall also include a listing of shop drawings and other required submittals keyed to the Progress Schedule activities. It shall reflect realistic processing, delivery and construction periods. The Progress Schedule shall provide ample space for plotting of actual related progress. It shall be submitted to the City and the Engineer and shall be updated on a bi-weekly basis throughout the full period of the project. All work shall be in accordance with the 2020 State of Connecticut Department of Transportation Standard Specifications Form 818 and the latest Supplemental Specifications.

SECTION 1.09 -MEASUREMENT AND PAYMENT

Article 1.09.04 -Extra and Cost-Plus Work:

Section 1.09.04 (f) -Add the following after the first sentence:

Increases in bonding costs shall not be compensated for within any extra work payment. Payment for such costs, if substantiated as outlined in Article 1.04.05, shall be based on a lump sum for actual costs with no additional mark-ups.

Replace 1.09.06 -"Partial Payments" with the following

1.09.06-Partial Payments:

A. Monthly and Semi-monthly Estimates.

Add the following after Subarticle 1.09.06-A (2)

(3) As soon as possible after the final inspection, the apparent final quantities will be sent to the Contractor. The Contractor shall respond in writing within 21 days of receipt by either signing or thus accepting the final quantities or by disagreeing in writing, citing the pay items involved with documentation and justification of such agreement. Failure to respond within the 21 days will be considered as acceptance of the final quantities and the Department may proceed with final payment.

SECTION A

SPECIAL PROVISIONS

HARBOR BROOK
BRIDGE REPLACEMENT AND UTILITY IMPROVEMENTS
BUTLER STREET AND HANOVER STREET

CITY PROJECT NO. B024-48

MERIDEN, CONNECTICUT

TABLE OF CONTENTS

Special Provisions:

Notice to Contractor – Environmental Investigations
Notice to Contractor – General

Article 1.01.01	Definition of Terms and Permissible Abbreviations
Article 1.02	Proposal Requirements and Conditions
Article 1.07.13	Legal Relations and Responsibilities
Article 1.08	Prosecution and Progress
Article 1.09	Measurement and Payment
0101000A	Environmental Health and Safety
0101109A	Hazardous Materials Excavation
0101117A	Controlled Materials Handling
0101126A	Disposal of Hazardous Waste
0101128A	Securing, Construction and Dismantling of a Waste Stockpile and Treatment Area
0101130A	Environmental Work – Solidification
0101164A	Treatment System Operation
0201001A	Clearing and Grubbing
0201451A	Temporary Protective Fence
0202000A	Earth Excavation
0202200A	Channel Excavation Earthwork
0202216A	Excavation and Reuse of Existing Channel Bottom Material
0202315A	Disposal of Controlled Materials
0202318A	Management of Reusable Controlled Material
0202401A	Removal of Temporary Pavement
0202450A	Video Inspection Surveys and Reports
0202452A	Test Pits
0202483A	Removal of Bituminous Curb
0202502A	Removal of Concrete Building Slab
0202503A	Removal of Concrete Curb
0202513A	Removal of Concrete Sidewalk
0202515A	Removal of Concrete Apron
0202530A	Removal of Bituminous Surface
0202640A	2-Inch Groundwater Monitoring Well Abandonment

0204139	Cofferdam Material Left in Place
0204151A	Handling Water
0204213A	Handling Contaminated Groundwater
0209001A	Formation of Subgrade
0212001A	Reuse Subbase
0219005A	Sedimentation Control Coir Fiber Roll System
0219011A	Sediment Control System Catch Basin
0286000A	Drainage Trench Excavation
0286000.10A	Rock in Drainage Trench Excavation
0304003A	Reuse Processed Aggregate Base
0519004A	Elastomeric Membrane Waterproofing and Floodproofing
0520036A	Asphaltic Plug Expansion Joint System
0601445A	Embankment Wall (Site No. 1)
0601651A	Retaining Wall (Site No. 1)
0601652A	Retaining Wall (Site No. 1)
0601653A	Retaining Wall (Site No. 1)
0707009A	Membrane Waterproofing (Cold Liquid Elastomeric)
0819002A	Penetrating Sealer Protective Compound
0901003A	Steel Bollard
0901006A	Remove and Reset Bollard
0904051A	3-Tube Curb Mounted Bridge Rail
0915000A	Tree Protection
0921007A	Monolithic Concrete Sidewalk and Curb
0950019A	Turf Establishment – Lawn
0969060A	Construction Field Office, Small
0971001A	Maintenance Protection of Traffic
0979004A	Construction Barricade Detectable
1300061A	Water Main Support System
1301081A	6” Ductile Iron Pipe (Water Main)
1301082A	8” Ductile Iron Pipe (Water Main)
1301084A	10” Ductile Iron Pipe (Water Main)
1302003A	6” Gate Valve
1302004A	8” Gate Valve
1302006A	10” Gate Valve
1302047A	Reset Gate Box (Water Main)
1302059A	Adjust Gate Box (Water Main)
1302204A	6” X 6” Tapping Sleeve And Valve
1302206A	8” X 8” Tapping Sleeve And Valve
1302208A	10” X 10” Tapping Sleeve And Valve
1302300A	10” Connection to Hanover Street
1302301A	8” Connection to Cherry Street
1301658A	10” Ductile Iron Pipe Install on Bridge (Water Main)
1302931A	Water Main Insulation Cover (Water Main)
1302932A	Water Main Insulation Utility Conflict (Water Main)
1303198A	Hydrant (Water Main)
1400101A	15” PVC Pipe (Sanitary Sewer)
1403001A	Manhole (Sanitary Sewer)
1403010A	Manhole Frame and Cover (Sanitary Sewer)

1403020A	Existing Manhole Frame & Cover Adjustment (Sanitary Sewer)
15000451.1A P	Electric Ductbank (2x1 Conc. Encased) Participating
1500041.2A P	Electric Ductbank (2x2 Conc. Encased) Participating
1500041.4A P	Electric Ductbank (4x1 Conc. Encased) Participating
1500041.8A P	Electric Ductbank (4x2 Conc. Encased) Participating
1500046A P	Tel/Data Ductbank (2x1 Conc. Encased) Participating
1500046A	Tel/Data Ductbank (2x1 Conc. Encased) Non – Participating
1500175A	Electric Vault Non-Participating
1500176A	Tel/Data Vault Non-Participating

ITEM #0101000A - ENVIRONMENTAL HEALTH AND SAFETY

Description:

Under this item, the Contractor shall establish protocols and provide procedures to protect the health and safety of its employees and subcontractors as related to the proposed construction activities performed within the Project AOEC(s). Work under this Item consists of the development and implementation of a written HASP that addresses the relative risk of exposure to documented hazards present within Project limits. The HASP shall establish health and safety protocols that address the relative risk of exposure to regulated substances in accordance with 29 CFR 1910.120 and 29 CFR 1926.65. Such protocols shall only address those concerns directly related to site conditions.

Note: The Engineer will prepare a site-specific health and safety plan which is compatible with the Contractor's plan and will be responsible for the health and safety of all Project Inspectors, City employees and consulting engineers.

Materials:

The Contractor must provide chemical protective clothing (CPC) and personal protective equipment (PPE) as stipulated in the Contractor's HASP during the performance of work in areas identified as potentially posing a risk to worker health and safety for workers employed by the Contractor and all subcontractors.

Construction Methods:

1-Existing Information: The Contractor shall utilize all available information and existing records and data pertaining to chemical and physical hazards associated with any of the regulated substances identified in the environmental site investigations to develop the HASP. A list of documents containing this data is found in "Notice to Contractor – Environmental Investigations".

2-General: The requirements set forth herein pertain to the provision of workers' health and safety as it relates to proposed Project activities when performed in the presence of hazardous or regulated materials or otherwise environmentally sensitive conditions. THE PROVISION OF WORKER HEALTH AND SAFETY PROTOCOLS WHICH ADDRESS POTENTIAL AND/OR ACTUAL RISK OF EXPOSURE TO SITE SPECIFIC HAZARDS POSED TO CONTRACTOR EMPLOYEES IS SOLELY THE RESPONSIBILITY OF THE CONTRACTOR.

The Contractor shall be responsible for the development, implementation and oversight of the HASP throughout the performance of work within the limits of the AOEC(s), as identified in the Contract Documents, and in other areas identified by the Engineer or by the HASP where site conditions may pose a risk to worker health and safety and/or the environment. **No physical aspects of the work within the AOEC shall begin until the HASP is reviewed by the Engineer and is determined to meet the requirements of the specifications. However, the Contract time, in accordance with Article 1.03.08, will begin on the date stipulated in the Notice to Proceed.**

3-Regulatory Requirements: All construction related activities performed by the Contractor within the limits of the AOEC(s) or in other areas where site conditions may pose a risk to worker health and safety and/or the environment shall be performed in conformance with 29 CFR 1926, Safety and Health Regulations for Construction and 29 CFR 1910, Safety and Health Regulations for General Industry. Conformance to 29 CFR 1910.120, Hazardous Waste Site Operations and Emergency Response (HAZWOPER) may also be required, where appropriate.

4-Submittals: Three copies of the HASP shall be submitted to the Engineer within four (4) weeks after the Award of Contract or four (4) weeks prior to the start of any work in the AOEC, whichever is first, but not before the Award of the Contract.

The HASP shall be developed by a qualified person designated by the Contractor. This qualified person shall be a Certified Industrial Hygienist (CIH), Certified Hazardous Material Manager (CHMM), or a Certified Safety Professional (CSP). He/she shall have review and approval authority over the HASP and be identified as the Health and Safety Manager (HSM). The HASP shall bear the signature of said HSM indicating that the HASP meets the minimum requirements of 29 CFR 1910.120 and 29 CFR 1926.65.

The Engineer will review the HASP(s) within four (4) weeks of submittal and provide written comments as to deficiencies in and/or exceptions to the plan(s), if any, to assure consistency with the specifications, applicable standards, policies and practices and appropriateness given potential or known site conditions. Items identified in the HASP which do not conform to the specifications will be brought to the attention of the Contractor, and the Contractor shall revise the HASP to correct the deficiencies and resubmit it to the Engineer for determination of compliance with this item. The Contractor shall not be allowed to commence work activities in the AOEC(s), as shown on the Plans, or where site conditions exist which may pose a risk to worker health and safety and/or the environment, until the HASP has been reviewed and accepted by the Engineer. No claim for delay in the progress of work will be considered for the Contractor's failure to submit a HASP that conforms to the requirements of the Contract.

5-HASP Provisions:

(a) General Requirements: The Contractor shall prepare a HASP covering all Project site work regulated by 29 CFR 1910.120(b)/ 1926.65(b) to be performed by the Contractor and all subcontractors under this Contract. The HASP shall establish in detail, the protocols necessary for the recognition, evaluation, and control of all hazards associated with each task performed under this Contract. The HASP shall address site-specific

safety and health hazards of each phase of site operation and include the requirements and procedures for employee protection. The level of detail provided in the HASP shall be tailored to the type of work, complexity of operations to be performed, and hazards anticipated. Details about some activities may not be available when the initial HASP is prepared and submitted. Therefore, the HASP shall address, in as much detail as possible, all anticipated tasks, their related hazards and anticipated control measures.

The HASP shall interface with the Contractor's Safety and Health Program. Any portions of the Safety and Health Program that are referenced in the HASP shall be included as appendices to the HASP. All topics regulated by the 29 CFR 1910.120(b)(4) and those listed below shall be addressed in the HASP. Where the use of a specific topic is not applicable to the Project, the HASP shall include a statement to justify its omission or reduced level of detail and establish that adequate consideration was given the topic.

(b) Elements:

(i) Site Description and Contamination Characterization: The Contractor shall provide a site description and contaminant characterization in the HASP that meets the requirements of 29 CFR 1910.120/1926.65.

(ii) Safety and Health Risk Analysis/Activity Hazard Analysis: The HASP shall address the safety and health hazards on this site for every operation to be performed. The Contractor shall review existing records and data to identify potential chemical and physical hazards associated with the site and shall evaluate their impact on field operations. Sources, concentrations (if known), potential exposure pathways, and other factors as noted in CFR 1910.120/126.65, paragraph (c)(7) employed to assess risk shall be described. The Contractor shall develop and justify action levels for implementation of engineering controls and personal protective equipment upgrades and downgrades for controlling worker exposure to the identified hazards. If there is no permissible exposure limit (PEL) or published exposure level for an identified hazard, available information from other published studies may be used as guidance. Any modification of an established PEL must be fully documented.

The HASP shall include a comprehensive section that discusses the tasks and objectives of the site operations and logistics and resources required to complete each task. The hazards associated with each task shall be identified. Hazard prevention techniques, procedures and/or equipment shall be identified to mitigate each of the hazards identified.

(iii) Staff Organization, Qualifications and Responsibilities: The HASP shall include a list of personnel expected to be engaged in site activities and certify that said personnel have completed the educational requirements stipulated in 29 CFR 1910.120 and 29 CFR 1926.65, are currently monitored under a medical surveillance program in compliance with those regulations, and that they are fit for work under "level C" conditions.

The Contractor shall assign responsibilities for safety activities and procedures. An outline or flow chart of the safety chain of command shall be provided in the HASP. Qualifications, including education, experience, certifications, and training in safety and health for all personnel engaged in safety and health functions shall be documented in the HASP. Specific duties of each on-site team member should be identified. Typical team members include but are not limited to Team Leader, Scientific Advisor, Site Safety Officer, Public Information Officer, Security Officer, Record Keeper, Financial Officer, Field Team Leader, and Field Team members.

The HASP shall also include the name and qualifications of the individual proposed to serve as Health and Safety Officer (HSO). The HSO shall have full authority to carry out and ensure compliance with the HASP. The Contractor shall provide a competent HSO on-site who is capable of identifying existing and potential hazards in the surroundings or working conditions which are unsanitary, hazardous or dangerous to employees and who has authorization to take prompt corrective measures to eliminate or control them. The qualifications of the HSO shall include completion of OSHA 40-hour HAZWOPER training and 8-hour HAZWOPER supervisory training; a minimum of one year of working experience with the regulated compounds that have been documented to exist within Project limits; a working knowledge of Federal and State safety regulations; specialized training or documented experience (one year minimum) in personal and respiratory protective equipment program implementation; the proper use of air monitoring instruments, air sampling methods and procedures; and certification training in first aid and CPR by a recognized, approved organization such as the American Red Cross.

The primary duties of the HSO shall be those associated with worker health and safety. The Contractor's HSO responsibilities shall be detailed in the written HASP and shall include, but not be limited to the following:

(A) Directing and implementing the HASP.

(B) Ensuring that all Project personnel have been adequately trained in the recognition and avoidance of unsafe conditions and the regulations applicable to the work environment to control or eliminate any hazards or other exposure to illness or injury (29 CFR 1926.21). All personnel shall be adequately trained in procedures outlined in the Contractor's written HASP.

(C) Authorizing Stop Work Orders, which shall be executed upon the determination of an imminent health and safety concern.

(D) Contacting the Contractor's HSM and the Engineer immediately upon the issuance of a Stop Work order when the HSO has made the determination of an imminent health and safety concern.

(E) Authorizing work to resume, upon approval from the Contractor's HSM.

(F) Directing activities, as defined in the Contractor's written HASP, during emergency situations; and

(G) Providing personal monitoring where applicable, and as identified in the HASP.

(iv) Employee Training Assignments: The Contractor shall develop a training program to inform employees, supplier's representatives, and official visitors of the special hazards and procedures (including PPE, its uses and inspections) to control these hazards during field operations. Official visitors include but are not limited to Federal Agency Representatives, State Agency Representatives, Municipal Agency Representatives, Contractors, subcontractors, etc. This program shall be consistent with the requirements of 29 CFR 1910.120 and 29 CFR 1926.65.

(v) Personal Protective Equipment: The plan shall include the requirements and procedures for employee protection and should include a detailed section on respiratory protection. The Contractor shall describe in detail and provide appropriate personal protective equipment (PPE) to insure that workers are not exposed to levels greater than the action level for identified hazards for each operation stated for each work zone. The level of protection shall be specific for each operation and shall be in compliance with all requirements of 29 CFR 1910 and 29 CFR 1926. The Contractor shall provide, maintain, and properly dispose of all PPE.

(vi) Medical Surveillance Program: All on-site Contractor personnel engaged in 29 CFR 1910.120/1926.65 operations shall have medical examinations meeting the requirements of 29 CFR 1910.120(f) prior to commencement of work.

The HASP shall include certification of medical evaluation and clearance by the physician for each employee engaged in 29 CFR 1910.120/1926.65 operations at the site.

(vii) Exposure Monitoring/Air Sampling Program: The Contractor shall submit an Air Monitoring Plan as part of the HASP which is consistent with 29 CFR 1910.120, paragraphs (b)(4)(ii)(E), (c)(6), and (h). The Contractor shall identify specific air sampling equipment, locations, and frequencies in the air-monitoring plan. Air and exposure monitoring requirements shall be specified in the Contractor's HASP. The Contractor's CIH shall specify exposure monitoring/air sampling requirements after a careful review of the contaminants of concern and planned site activities.

(viii) Site Layout and Control: The HASP shall include a map, work zone delineation (support, contamination, reduction and exclusion), on/off-site communications, site access controls, and security (physical and procedural).

(ix) Communications: Written procedures for routine and emergency communications procedures shall be included in the Contractor's HASP.

(x) Personal Hygiene, Personal Decontamination and Equipment Decontamination: Decontamination facilities and procedures for personnel protective equipment, sampling equipment, and heavy equipment shall be discussed in detail in the HASP.

(xi) Emergency Equipment and First Aid Requirements: The Contractor shall provide appropriate emergency first aid kits and equipment suitable to treat exposure to the hazards identified, including chemical agents. The Contractor will provide personnel that have certified first aid/CPR training on-site at all times during site operations.

(xii) Emergency Response Plan and Spill Containment Program: The Contractor shall establish procedures in order to take emergency action in the event of immediate hazards (i.e., a chemical agent leak or spill, fire or personal injury). Personnel and facilities supplying support in emergency procedures will be identified. The emergency equipment to be present on-site and the Emergency Response Plan procedures, as required 29 CFR 1910.120, paragraph (1)(1)(ii) shall be specified in the Emergency Response Plan. The Emergency Response Plan shall be included as part of the HASP. This Emergency Response Plan shall include written directions to the closest hospital as well as a map showing the route to the hospital.

(xiii) Logs, Reports and Record Keeping: The Contractor shall maintain safety inspections, logs, and reports, accident/incident reports, medical certifications, training logs, monitoring results, etc. All exposure and medical monitoring records are to be maintained according to 29 CFR 1910 and 29 CFR 1926. The format of these logs and reports shall be developed by the Contractor to include training logs, daily logs, weekly reports, safety meetings, medical surveillance records, and a phase-out report. These logs, records, and reports shall be maintained by the Contractor and be made available to the Engineer.

The Contractor shall immediately notify the Engineer of any accident/ incident. Within two working days of any reportable accident, the Contractor shall complete and submit to the Engineer an accident report.

(xiv) Confined space entry procedures: Confined space entry procedures, both permit required and non-permit required, shall be discussed in detail.

(xv) Pre-entry briefings: The HASP shall provide for pre-entry briefings to be held prior to initiating any site activity and at such other times as necessary to ensure that employees are apprised of the HASP and that this plan in being followed.

(xvi) Inspections/audits: The HSM or HSO shall conduct Inspections or audits to determine the effectiveness of the HASP. The Contractor shall correct any deficiencies in the effectiveness of the HASP.

6-HASP Implementation: The Contractor shall implement and maintain the HASP throughout the performance of work. In areas identified as having a potential risk to worker health and safety, and in any other areas deemed appropriate by the HSO, the Contractor shall be prepared to immediately implement the appropriate health and safety measures, including but not limited to the use of personal protective equipment (PPE), and engineering and administrative controls.
If the Engineer observes deficiencies in the Contractor's operations with respect to the HASP, they shall be assembled in a written field directive and given to the Contractor. The Contractor shall immediately correct the deficiencies and respond, in writing, as to how each was corrected. Failure to bring the work area(s) and implementation procedures into compliance will result in a Stop Work Order and a written directive to discuss an appropriate resolution(s) to the matter. When the Contractor demonstrates compliance, the Engineer shall remove the Stop Work Order. If a Stop Work Order has been issued for cause, no delay claims on the part of the Contractor will be honored.

Disposable CPC/PPE, i.e. disposable coveralls, gloves, etc., which come in direct contact with hazardous or potentially hazardous material shall be placed into 55 gallon USDOT 17-H drums and disposed of in accordance with Federal, State, and local regulations. The drums shall be temporarily staged and secured within the WSA until the material is appropriately disposed.

7-HASP Revisions: The HASP shall be maintained on-site by the Contractor and shall be kept current with construction activities and site conditions under this Contract. The HASP shall be recognized as a flexible document which shall be subject to revisions and amendments, as required, in response to actual site conditions, changes in work methods and/or alterations in the relative risk present. All changes and modifications shall be signed by the Contractor's HSM and shall require the review and acceptance by the Engineer prior to the implementation of such changes.

Should any unforeseen hazard become evident during the performance of the work, the HSO shall bring such hazard to the attention of the Contractor and the Engineer as soon as possible. In the interim, the Contractor shall take action, including Stop Work Orders and/or upgrading PPE as necessary to re-establish and maintain safe working conditions and to safeguard on-site personnel, visitors, the public and the environment. The HASP shall then be revised/amended to reflect the changed condition.

Method of Measurement:

1-Within thirty (30) calendar days of the award of the Contract, the Contractor shall submit to the Engineer for acceptance a breakdown of its lump sum bid price for this item detailing:

(a) The development costs associated with preparing the HASP in accordance with these Specifications.
(b) The cost per month for the duration of the Project to implement the HASP and provide the services of the HSM and the HSO.

2-If the lump sum bid price breakdown is unacceptable to the Engineer; substantiation showing that the submitted costs are reasonable shall be required.

3-Upon acceptance of the payment schedule by the Engineer, payments for work performed will be made as follows:

(a) The lump sum development cost will be certified for payment.

(b) The Contractor shall demonstrate to the Engineer monthly that the HASP has been kept current and is being implemented and the monthly cost will be certified for payment.

(c) Any month where the HASP is found not to be current or is not being implemented, the monthly payment for the Environmental Health and Safety Item shall be deferred to the next monthly payment estimate. If the HASP is not current or being implemented for more than thirty calendar days, there will be no monthly payment.

(d) Failure of the Contractor to implement the HASP in accordance with this Specification shall result in the withholding of all Contract payments.

Basis of Payment:

This work will be paid for at the Contract lump sum price for "Environmental Health and Safety" which price shall include all materials, tools, equipment and labor incidental to the completion of this item for the duration of the Project to maintain, revise, monitor and implement the HASP. Such costs include providing the services of the HSM and HSO, Contractor employee training, chemical protective clothing (CPC), personal protective equipment (PPE), disposal of PPE and CPC, medical surveillance, decontamination facilities, engineering controls, monitoring and all other HASP protocols and procedures established to protect the Health and Safety for all on-site workers.

Pay Item	Pay Unit
Environmental Health and Safety	LS

ITEM #0101109A - HAZARDOUS MATERIALS EXCAVATION

Description:

Work under this Item is intended to provide specific procedural requirements to be followed during the excavation of hazardous materials from within the Hazardous AOEC(s) as shown on the Plans. This supplements the Specification Sections 2.02, 2.03, 2.06, and 2.86 wherever hazardous materials are encountered. Work under this item shall include transporting and stockpiling materials at the WSA; and covering, securing, and maintaining the stockpiled materials throughout the duration of the Project. Note: For this Project, all materials excavated from within the limits of Hazardous Areas of Environmental Concern, including but not limited to concrete, and soils are considered to be hazardous materials. All hazardous materials shall be stockpiled separately from any Controlled Materials in the WSA.

Hazardous concentrations of regulated substances have been documented to exist within the Project. These substances include either TSCA-regulated substances, as defined in 40 CFR Parts 700-702, or RCRA-regulated substances, as defined in 40 CFR Parts 261-265 or in CGS Section 22a-449. Specific information concerning the detected substances and their concentrations is documented in the reports listed in the "Notice to Contractor – Environmental Investigations."

Materials:

Materials shall be as shown on the Project Plans.

Plastic Sheet: Polyethylene plastic sheeting for underlayment shall be at least 30 mil thick. Polyethylene plastic sheeting covering excavated material shall be at least 10 mil thick. Both types of sheeting shall have a minimum width of ten feet.

Sand Bags: Sandbags used to secure the polyethylene cover shall be at least 30 pounds.

Sorbent Boom: Shall be eight inch in diameter and ten feet long and possess petrophilic properties. Sorbent booms shall also have devices, (i.e. clips, clasps, etc.), for connection to additional lengths of boom.

Construction Methods:

A. General

A minimum of 48 hours prior to beginning excavation in any Hazardous AOEC, the Contractor must submit to the Engineer for review (1) the transporter's current US DOT Certificate of Registration and (2) the transporter's current Hazardous Waste Transporter Permits for Connecticut, the hazardous waste destination state, and any other applicable states. The Contractor must also notify the Engineer of its selected disposal facility. If the information submitted is

complete and acceptable to the Engineer, then the Engineer will obtain a temporary EPA ID number for this work. No excavation shall begin until the Contractor has the EPA ID number.

When hazardous materials are encountered during the course of the work, health and safety provisions shall conform to the appropriate sections of the Contract. Provisions may include the implementation of engineering controls, air and personal monitoring, use of chemical protective clothing (CPC), personal protective equipment (PPE), decontamination procedures and providing a Health and Safety Officer (HSO) on site during construction activities in the Hazardous AOEC(s).

Unless otherwise directed by the Engineer, hazardous materials removed from various excavations within Hazardous AOEC(s) shall be transported directly from their point of origin on the Project to the WSA. Excavation of the AOEC shall occur in intervals of two (2) foot lifts as directed by the Engineer. Hazardous materials shall be segregated from other excavated materials within the WSA. Stockpiles of different types of hazardous materials (i.e. railroad ties, concrete, earth, etc.), as well as materials generated from different hazardous AOEC's, shall not be commingled inside the WSA. The bins shall be lined with 30 mil polyethylene sheeting prior to placement of materials. The excavated material shall be placed on a secondary sheet of 10 mil polyethylene, and covered with 10 mil polyethylene sheeting within the bins as shown on the Project Plans. The Contractor shall plan excavation activities within Hazardous AOEC(s) in consideration of the capacity of WSA, and the material testing and disposal requirements of the applicable Contract item. **No claims for delay will be considered based on the Contractor's failure to coordinate excavation activities as specified herein.**

The Engineer will sample the stockpiled controlled materials to meet the acceptance criteria of the treatment/recycling/disposal facilities submitted by the Contractor. The Contractor is hereby notified that laboratory turnaround time is expected to be fifteen (15) working days. Turnaround time is the period of time beginning when the Contractor notifies the Engineer which facility it intends to use and that the bin within the WSA is full and ready for sampling and ending with the Contractor's receipt of the laboratory analytical results. Any change of intended treatment/recycling/disposal facility may prompt the need to resample and will therefore restart the time required for laboratory turnaround. The laboratory will furnish such results to the Engineer. Upon receipt, the Engineer will make available to the Contractor the results of the final waste characterization determinations. **No delay claim will be considered based upon the Contractor′s failure to accommodate the laboratory turnaround time as identified above.**

B. Transportation and Stockpiling

In addition to following all pertinent Federal, State and local laws or regulatory agency policies, the Contractor shall adhere to the following precautions during transport of hazardous materials:

- Transported hazardous materials are to be covered prior to leaving the point of generation and are to remain covered until the arrival at the WSA;
- All vehicles shall have secure, watertight containers free of defects for material transport;

- All vehicles departing the excavation site are properly logged to show the vehicle identification, driver's name, time of departure, destination, and approximate volume and content of materials carried;
- No material shall leave the excavation area until there is adequate lay down area prepared in the WSA;
- Transport vehicles shall not leave the excavation site for the WSA until gross contamination is removed; and,
- Documentation must be maintained indicating that all applicable laws have been satisfied and that the materials have been successfully transported and received at the WSA.

Construction of the WSA shall be completed prior to the initiation of construction activities generating Hazardous Materials. Plastic polyethylene sheeting shall underlay all excavated hazardous materials to ensure that seepage of material or water from the WSA is prevented. Measures shall be implemented to divert rainfall away from the WSA.

Placement of sorbent boom along the perimeter of the WSA shall be conducted when soil is saturated with petroleum product.

Excavated materials shall be staged as shown on the Project Plans or as directed by the Engineer.

C. WSA Maintenance

The Contractor shall provide all materials, equipment, tools and labor necessary to perform its activities within the WSA. Such activities include, but are not limited to, handling and management of stockpiles and drummed CPC/PPE, uncovering and recovering stockpiles, maintenance of the WSA, replacement of damaged components (i.e. sand bags, polyethylene sheeting, etc.), and waste inventory record management. The Contractor shall manage all materials handled in the WSA in such a way as to minimize tracking of potential hazardous materials across the site and off-site, and minimize dust generation.

Each stockpile shall be securely covered when not in active use with polyethylene sheeting of sufficient size to prevent the generation of dust and infiltration of precipitation. Such sheeting shall be secured with sandbags to prevent wind erosion.

The staged stockpiles shall be inspected at least daily by the Contractor to ensure that the cover and containment have not been damaged and that there is no apparent leakage from the pile. If the plastic cover has been damaged, or there is evidence of leakage, the Contractor shall immediately replace the cover or containment as needed to prevent the release of materials to the environment from the piles.

An inventory of stockpiled materials and drummed CPC/PPE shall be conducted on a daily basis. Inventory records shall indicate the approximate volume of material/drums stockpiled per day; the approximate volume of material/drums stockpiled to date; material/drums loaded and transported off-site for disposal; any materials loaded and transported for on-site reuse; and identification of stockpiles relative to their points of generation.

Following the removal of all stockpiled hazardous materials, any residue shall be removed from all surfaces of the WSA as directed by the Engineer. This operation shall be accomplished using dry methods such as shovels, brooms, mechanical sweepers, or a combination thereof. Residue shall be disposed of as Hazardous Materials.

D. Dewatering

Dewatering activities shall conform to Items in pertinent articles of the Contract.

E. Decontamination

All equipment shall be provided to the work site free of gross contamination. The Engineer may prohibit from the site any equipment that in his opinion has not been thoroughly decontaminated prior to arrival. Any decontamination of the Contractor's equipment prior to arrival at the site shall be at the expense of the Contractor. The Contractor is prohibited from decontaminating equipment on the Project site that has not been thoroughly decontaminated prior to arrival.

The Contractor shall furnish labor, materials, tools and equipment for decontamination of all equipment and supplies that are used to handle Hazardous Materials. Decontamination shall be conducted at an area designated by the Engineer and shall be required prior to equipment and supplies leaving the Project, between stages of the work, or between work in different Hazardous (and non-hazardous) AOEC's.

The Contractor shall use dry decontamination procedures. Residuals from dry decontamination activities shall be collected and managed as Hazardous Materials. If dry methods are unsatisfactory as determined by the Engineer, the Contractor shall modify decontamination procedures as required subject to the Engineer's approval.

F. Dust Control

The Contractor shall implement a fugitive dust suppression program in accordance with the Specifications to prevent the off-site migration of particulate matter and/or dust resulting from excavation, loading and operations associated with Hazardous Materials. It shall be the Contractor's responsibility to supervise fugitive dust control measures and to monitor airborne particulate matter. The Contractor shall:

1. Employ reasonable fugitive dust suppression techniques.
2. Visually observe the amounts of particulate and/or fugitive dust generated during the handling of materials. If the apparent amount of fugitive dust and/or particulate matter is not acceptable to the Engineer, the Engineer may direct the Contractor to implement corrective measures at his discretion, including, but not limited to, the following:
    (a) apply water to pavement surfaces
    (b) apply water to equipment and excavation faces; and
    (c) apply water during excavation, loading and dumping.

Method of Measurement:

The work of Hazardous Material Excavation will be measured for payment by the number of cubic yards of material excavated within the Hazardous AOEC(s) and taken to the WSA. This measurement will be in accordance with and in addition to the quantity measured for payment of the applicable excavation item in Specification Sections 2.02, 2.03, 2.06, and 2.86, and the Contract Special Provisions. Excess excavations made by the Contractor beyond the payment limits specified in the Contract are not permitted. Such excess material will not be measured for payment, and the Contractor assumes all responsibility for costs associated with the appropriate handling, management and disposal of this material.

Equipment decontamination, the collection of residuals, and the collection and disposal of liquids generated during equipment decontamination activities will not be measured separately for payment.

Basis of Payment:

This work will be paid for at the Contract unit price, which will be in addition to the Contract unit price for the applicable excavation item in Specification Sections 2.02, 2.03, 2.06, and 2.86. The unit price shall include: transportation to and stockpiling hazardous materials at the WSA; covering and maintaining the stockpiles within the WSA throughout the duration of the Project; and all tools, equipment, material and labor incidental to this work.

This price shall also include equipment decontamination; the collection of residuals generated during decontamination and placement of such material in the WSA; and the collection and disposal of liquids generated during equipment decontamination activities.

Securing, construction and dismantling of the WSA will be paid for under Item 101128A. Handling and disposal of contaminated groundwater will be paid for under the appropriate Contract items. Payment for dust control activities will be made under the appropriate Contract items.

Pay Item	Pay Unit
Hazardous Materials Excavation	CY

ITEM #0101117A - CONTROLLED MATERIALS HANDLING

Description:

Work under this Item is intended to provide specific procedural requirements to be followed by the Contractor during the excavation of Controlled Materials from within any AOEC, as shown on the Project Plans. This supplements Specification Sections 2.02, 2.03, 2.06, and 2.86, and Contract Special Provisions for excavation wherever contaminated materials are encountered. Work under this item shall include transporting and stockpiling materials at the WSA; and covering, securing, and maintaining the stockpiled materials throughout the duration of the Project. All materials, excluding the existing pavement structure (asphalt and subbase), rock, ledge, and concrete, excavated within AOEC(s) are to be considered Controlled Materials.

Controlled Materials consisting of non-hazardous levels of regulated substances have been documented to exist within the Project. Such contamination is documented in the reports listed in the "Notice to Contractor – Environmental Investigations." Where contaminated soils are excavated, such soil will not be reusable as backfill, unless authorized by the Engineer in writing, and will require special handling, disposal and documentation procedures.

Materials:

The required materials are detailed on the Project Plans. All materials shall conform to the requirements of the Contract.

Plastic Sheet: Polyethylene plastic sheeting for underlayment shall be at least 30 mil thick. Polyethylene plastic sheeting for covering excavated material shall be a thickness of 10 mil. Both shall be at least 10 feet wide.

Covers for roll-off/storage containers shall be made of polyethylene plastic, or similar water-tight material, that is of sufficient size to completely cover top opening and can be securely fastened to the container.

Sand Bags: Sandbags used to secure polyethylene covers shall be at least 30 pounds.

Sorbent Boom: Shall be 8 inches in diameter and 10 feet long and possess petrophilic and hydrophobic properties. Sorbent booms shall also have devices (i.e. clips, clasps, etc.) for connection to additional lengths of boom.

Construction Methods:

A. General

When Controlled Materials are encountered during the course of the work, health and safety provisions shall conform to the appropriate sections of the Contract. Provisions may include

implementation of engineering controls, air and personal monitoring, the use of chemical protective clothing (CPC), personal protective equipment (PPE), implementation of engineering controls, air and personal monitoring, and decontamination procedures.

Unless otherwise directed by the Engineer, materials removed from any excavation within an AOEC shall be transported directly from their point of origin on the Project to the WSA. The stockpiles of excavated Controlled Materials shall be maintained as shown on the Project Plans. The Contractor shall plan excavation activities within AOEC(s) in consideration of the capacity of WSA, and the material testing and disposal requirements of the applicable Contract item. **No claims for delay shall be considered based on the Contractor's failure to coordinate excavation activities as specified herein.**

The Engineer will sample the stockpiled Controlled Materials at a frequency and for the constituents to meet the acceptance criteria of the treatment/recycling/disposal facilities submitted by the Contractor. The Contractor is hereby notified that laboratory turnaround time is expected to be fifteen (15) working days. Turnaround time is the period of time beginning when the Contractor notifies the Engineer which facility it intends to use and that the stockpile is ready for sampling and ending with the Contractor's receipt of the laboratory analytical results. Any change of intended treatment/recycling/disposal facility may prompt the need to resample and will therefore restart the time required for laboratory turnaround. The laboratory will furnish such results to the Engineer. Upon receipt, the Engineer will make available to the Contractor the results of the final waste characterization determinations. **No delay claim will be considered based upon the Contractor′s failure to accommodate the laboratory turnaround time as identified above.**

B. Transportation and Stockpiling

In addition to following all pertinent Federal, State and local laws or regulatory agency policies, the Contractor shall adhere to the following precautions during transport of non-hazardous materials:

- Transported Controlled Materials are to be covered prior to leaving the point of generation and are to remain covered until the arrival at the WSA;
- All vehicles departing the site are properly logged to show the vehicle identification, driver's name, time of departure, destination, and approximate volume and content of materials carried;
- All vehicles shall have secure, watertight containers free of defects for material transportation;
- No material shall leave the site until there is adequate lay down area prepared in the WSA; and,
- Documentation must be maintained indicating that all applicable laws have been satisfied and that the materials have been successfully transported and received at the WSA.

Construction of the WSA shall be completed prior to the initiation of construction activities generating Controlled Materials. Plastic polyethylene sheeting shall underlay all excavated Controlled Materials. Measures shall be implemented to divert rainfall away from the WSA.

Placement of sorbent boom along the perimeter of the WSA shall be conducted when soil is saturated with petroleum product.

Excavated materials shall be staged as shown on the Project Plans or as directed by the Engineer.

C. WSA Maintenance

The Contractor shall provide all necessary materials, equipment, tools and labor for anticipated activities within the WSA. Such activities include, but are not limited to, handling and management of stockpiles and drummed CPC/PPE; uncovering and recovering stockpiles; maintenance of WSA; replacement of damaged components (i.e. sand bags, plastic polyethylene sheeting, etc.); and waste inventory record management. The Contractor shall manage all materials in the WSA in such a way as to minimize tracking of potential contaminated materials across the site and off-site, and minimize dust generation.

Each stockpile shall be securely covered when not in active use with a cover of sufficient size to prevent generation of dust and infiltration of precipitation. The cover shall be to prevent wind erosion.

The staged stockpiles shall be inspected at least daily by the Contractor to ensure that the cover and containment have not been damaged and that there is no apparent leakage from the pile. If the cover has been damaged, or there is evidence of leakage from the piles, the Contractor shall immediately replace the cover or containment as needed to prevent the release of materials to the environment from the piles.

An inventory of stockpiled materials and drummed CPC/PPE shall be conducted on a daily basis. Inventory records shall indicate the approximate volume of material/drums stockpiled per day; the approximate volume of material/drums stockpiled to date; material/drums loaded and transported off-site for disposal; any materials loaded and transported for on-site reuse; and identification of stockpiles relative to their points of generation.

Following the removal of all stockpiled Controlled Materials, residuals shall be removed from surfaces of the WSA as directed by the Engineer. This operation shall be accomplished using dry methods such as shovels, brooms, mechanical sweepers or a combination thereof. Residuals shall be disposed of as Controlled Materials.

D. Dewatering

Dewatering activities shall conform to Items in pertinent articles of the Contract.

E. Decontamination

All equipment shall be provided to the work site free of contamination. The Engineer may prohibit from the site any equipment that in his opinion has not been thoroughly decontaminated prior to arrival. Any decontamination of the Contractor's equipment prior to arrival at the site shall be at the expense of the Contractor. The Contractor is prohibited from decontaminating equipment on the Project that has not been thoroughly decontaminated prior to arrival.

The Contractor shall furnish labor, materials, tools and equipment for decontamination of all equipment and supplies that are used to handle Controlled Materials. Decontamination shall be conducted at an area designated by the Engineer and may be required prior to equipment and supplies leaving the Project, between stages of the work, or between work in different AOEC's.

Dry decontamination procedures are recommended. Residuals from dry decontamination activities shall be collected and managed as Controlled Materials. If dry methods are unsatisfactory as determined by the Engineer, the Contractor shall modify decontamination procedures as required subject to the Engineer's approval.

F. Dust Control

The Contractor shall implement a fugitive dust suppression program in accordance with the Contract to prevent the off-site migration of particulate matter and/or dust resulting from excavation, loading and operations associated with Controlled Materials. It shall be the Contractor's responsibility to supervise fugitive dust control measures and to monitor airborne particulate matter. The Contractor shall:

1. Employ reasonable fugitive dust suppression techniques.
2. Visually observe the amounts of particulate and/or fugitive dust generated during the handling of Controlled Materials. If the apparent amount of fugitive dust and/or particulate matter is not acceptable to the Engineer, the Engineer may direct the Contractor to implement corrective measures at his discretion, including, but not limited to, the following:

    (a) apply water to pavement surfaces
    (b) apply water to equipment and excavation faces; and
    (c) apply water during excavation, loading and dumping.

G. Permit Compliance

The Contractor shall comply with the terms and conditions of the CTDEEP "General Permit for Contaminated Soil and/or Sediment Management (Staging and Transfer)," including the General Operating Conditions and the Specific Operating Conditions, except that the Engineer will conduct all soil/sediment characterization and perform all record keeping. In particular, the Contractor shall:

1. Operate, maintain and repair the WSA in conformance with the requirements of the General Permit.
2. Maintain a communications system capable of summoning fire, police, and/or other emergency service personnel.
3. Prevent unauthorized entry onto the stockpiles by the use of fences, gates, or other natural or artificial barriers.
4. Separate incidental excavation waste to the satisfaction of the receiving facility or to an extent that renders the contaminated soil and/or sediment suitable for its intended reuse.
5. Isolate and temporarily store incidental waste in a safe manner prior to off-site transport to a facility lawfully authorized to accept such waste.
6. Do not store more than 100 cubic yards of incidental waste at any one time.
7. Sort, separate and isolate all hazardous waste from contaminated soil and/or sediment.
8. Prevent or minimize the transfer or infiltration of contaminants from the stockpiles to the ground as detailed in "B. Transportation and Stockpiling" above.
9. Securely cover each stockpile of soil as detailed in "C. WSA Maintenance" above.
10. Minimize wind erosion and dust transport as detailed in "F. Dust Control" above.
11. Use anti-tracking measures at the WSA to ensure the vehicles do not track soil from the WSA onto a public roadway at any time.
12. Instruct the transporters of contaminated soil and/or sediment of best management practices for the transportation of such soil (properly covered loads, removing loose material from dump body, etc.).
13. Control all traffic related to the operation of the facility in such a way as to mitigate the queuing of vehicles off-site and excessive or unsafe traffic impact in the area where the facility is located.
14. Ensure that except as allowed in section 22a-174-18(b)(3)(C) of the Regulations of Connecticut State Agencies, trucks are not left idling for more than three (3) consecutive minutes.

Method of Measurement:

The work of Controlled Material Handling will be measured for payment by the number of cubic yards of controlled material excavated within the AOEC(s) and taken to the WSA. This measurement shall be in accordance with and in addition to the quantity measured for payment of the applicable excavation item in Specification Sections 2.02, 2.03, 2.06, and 2.86, or the Contract Special Provisions, as applicable. Excess excavations made by the Contractor beyond the payment limits specified in the Contract will not be measured for payment and the Contractor assumes all costs associated with the appropriate handling, management and disposal of this material.

Equipment decontamination, the collection of residuals, and the collection and disposal of liquids generated during equipment decontamination activities will not be measured separately for payment.

Basis of Payment:

This work shall be paid for at the Contract unit price, which shall include all transportation from the excavation site to the final WSA, including any intermediate handling steps; stockpiling Controlled Materials at the WSA; covering, securing, and maintaining the individual stockpiles within the WSA throughout the duration of the Project; and all tools, equipment, material and labor incidental to this work.

This price shall also include equipment decontamination; the collection of residuals generated during decontamination and placement of such material in the WSA; and the collection and disposal of liquids generated during equipment decontamination activities.

All materials, labor and equipment associated with compliance with the General Permit for Contaminated Soil and/or Sediment Management (Staging and Transfer) will not be measured separately, but will be considered incidental to the item "Controlled Materials Handling."

Securing, construction and dismantling of the WSA shall be paid for under Item 101128A. Handling and disposal of contaminated groundwater will be paid for under Item 0204210A. Payment for dust control activities shall be made under the appropriate Contract items.

Pay Item	Pay Unit
Controlled Materials Handling	CY

ITEM #0101126A - DISPOSAL OF HAZARDOUS WASTE

Description:

Work under this item shall consist of the loading, transportation and final off-site disposal of hazardous materials (excluding dewatering fluids), which have been generated from various excavations within the Hazardous AOEC(s), brought to the WSA, and determined to be contaminated with regulated substances at hazardous concentrations. These materials contain hazardous concentrations of TSCA-regulated substances, as defined in 40 CFR Parts 700-702, or RCRA-regulated substances, as defined in 40 CFR Parts 261-265 or in CGS Section 22a-449. Specific information concerning the detected substances and their concentrations is documented in the reports listed in the "Notice to Contractor – Environmental Investigations." These materials, after proper characterization by the Engineer, shall be transported from the WSA by a licensed hazardous waste transporter approved by the Department and disposed of at an EPA-permitted and Department-approved hazardous waste landfill within 90 days from the date of generation. These materials may require special handling within the WSA in order to isolate them from controlled materials being stored therein.

The Contractor must use one or more of the disposal facilities for the disposal of hazardous waste listed on *ConnDOT Approved Treatment, Storage, and Disposal Facilities Table Dated March 2023* provided at the end of this section.

The above list contains treatment/recycle/disposal facilities which can accept the waste stream generated by the project in quantities that may be limited by their permits and their operations restrictions. It is the responsibility of the contractor to verify that a facility will be available and capable of handling the volume as well as the chemical and physical characteristics of material generated by the project.

Construction Methods:

A. Material Disposal

The Engineer will sample materials stored at the WSA for final waste characterization at a frequency established by the selected disposal facilities. The Contractor shall designate to the Engineer which facility it intends to use prior to samples being taken. The Contractor is hereby notified that laboratory turnaround time is expected to be fifteen (15) working days. Turnaround time is the period of time beginning when the Contractor notifies the Engineer which facility it intends to use and that the bin within the WSA is full and ready for sampling and ending with the Contractor's receipt of the laboratory analytical results. Any change of intended disposal facility may prompt the need to resample and will therefore restart the time required for laboratory turnaround. The laboratory will furnish such results to the Engineer. Upon receipt, the Engineer will make available to the Contractor the results of the final waste characterization

determinations. **No delay claim will be considered based upon the Contractor′s failure to accommodate the laboratory turnaround time as identified above.**

The Contractor shall obtain and complete all paperwork necessary to arrange for material disposal, including disposal facility waste profile sheets. It is solely the Contractor's responsibility to co-ordinate the disposal of controlled materials with its selected treatment/recycling/disposal facility(s). Upon receipt of the final approval from the facility, the Contractor shall arrange for the loading, transport and treatment/recycling/disposal of the materials in accordance with all Federal and State regulations. **No claim will be considered based on the failure of the Contractor's disposal facility(s) to meet the Contractor's production rate or for the Contractor's failure to select sufficient facilities to meet its production rate.**

Any material processing (including but not limited to the removal of woody debris, scrap metal, pressure-treated and untreated wood timber, large stone, concrete, polyethylene sheeting or similar material) required by the Contractor's selected facility will be completed by the Contractor prior to the material leaving the site. It is solely the Contractor's responsibility to meet any such requirements of its facility. Any materials removed shall be disposed of or recycled in a manner acceptable to the Engineer at no additional cost. If creosote treated timbers are removed, they will be disposed of under the item "Disposal of Contaminated Timber Piles," "Disposal of Contaminated Railroad Ties," or in accordance with Article 1.04.05 in the absence of such items.

All hazardous waste manifests utilized to accompany the transportation of the waste material shall be prepared by the Contractor and signed by an authorized Department representative, as Generator, for each truck load of material that leaves the site. The Contractor shall forward the appropriate original copies of all manifests to the Engineer the same day the material leaves the Project site.

A load-specific certificate of disposal, signed by the authorized agent representing the waste disposal facility, shall be obtained by the Contractor and promptly delivered to the Engineer for each load.

B. Material Transportation

Excavated materials determined to be hazardous shall be transported in compliance with the applicable federal regulations. Transport vehicles shall not have any indentations or damage and must be free from leaks, and discharge openings must be securely closed during transportation.

In addition to all pertinent Federal, State and local laws or regulatory agency polices, the Contractor shall adhere to the following precautions during the transport of hazardous materials off-site:

- All vehicles departing the site are to be properly logged to show the vehicle identification, driver′s name, time of departure, destination, and approximate volume, and contents of materials carried;

- No materials shall leave the site unless a disposal facility willing to accept all of the material being transported has agreed to accept the type and quantity of waste;

- Documentation must be maintained indicating that all applicable laws have been satisfied and that the materials have been successfully transported and received at the disposal facility; and,

- The Contractor shall segregate the waste streams (i.e. soils, railroad ties, etc.) as directed by the receiving disposal facility.

C. Equipment Decontamination

All equipment shall be provided to the work site free of gross contamination. The Engineer may prohibit from the site any equipment that in his opinion has not been thoroughly decontaminated prior to arrival. Any decontamination of the Contractor's equipment prior to arrival at the site shall be at the expense of the Contractor. The Contractor is prohibited from decontaminating equipment on the Project that has not been thoroughly decontaminated prior to arrival.

The Contractor shall furnish labor, materials, tools and equipment for decontamination of all equipment and supplies that are used to handle Hazardous Materials. Decontamination shall be conducted at an area designated by the Engineer and shall be required prior to equipment and supplies leaving the Project, between stages of the work, and between work in different AOEC's.

The Contractor shall use dry decontamination procedures. Residuals from dry decontamination activities shall be collected and managed as Hazardous Materials. If the results from dry methods are unsatisfactory to the Engineer, the Contractor shall modify decontamination procedures as required.

The Contractor shall be responsible for the collection and treatment/recycling/disposal of any liquid wastes that may be generated by its decontamination activities in accordance with applicable regulations.

D. EPA ID Number

Prior to the generation of any hazardous waste, the Contractor shall notify the Engineer of its selected hazardous waste transporter and disposal facility. The Contractor must submit to the Engineer (1) the transporter's current US DOT Certificate of Registration and (2) the transporter's current Hazardous Waste Transporter Permits for the State of Connecticut, the hazardous waste destination state and any other applicable states. The Engineer will then obtain an EPA ID number that he will forward to the Contractor. Any changes in transporter or facility shall be immediately forwarded to the Engineer for review.

Method of Measurement:

The work of "DISPOSAL OF HAZARDOUS WASTE" will be measured for payment as the actual net weight in tons of material delivered to the disposal facility. Such determinations shall be made by measuring each hauling vehicle on the certified permanent scales at the disposal facility. Total weight will be the summation of weight bills issued by the facility specific to this Project.

The disposal of excavated materials, originally anticipated to be hazardous materials, but determined by characterization sampling not to contain hazardous concentrations of regulated chemicals (Controlled Materials) will not be measured for payment under this Item. Disposal of these materials will be handled in accordance with the provisions of Item 0202315A – Disposal of Controlled Material, Item 0020761A – Handling and Disposal of Contaminated Concrete, or Item 0101133A – Disposal of Contaminate Railroad Ties, as applicable, or in accordance with Article 1.04.05 in the item's absence. Excess excavations made by the Contractor beyond the payment limits specified in Specification Sections 2.02, 2.03, 2.06, and 2.86, or the Contract Special Provisions (as appropriate) will not be measured for payment and the Contractor assumes all responsibility for costs associated with the appropriate handling, management and disposal of this material.

Equipment decontamination, the collection of residuals, and the collection and disposal of liquids generated during equipment decontamination activities will not be measured separately for payment.

Basis of Payment:

This work will be paid for at the Contract unit price, which shall include the loading and transportation of hazardous materials from the WSA to the disposal facility and the disposal of such materials; the preparation of manifests and fees paid; and all equipment, materials, tools, and labor incidental to loading, transporting, and disposal of materials. **This unit price will be applicable to all of the Contractor-selected disposal facilities for the duration of the Project.**

This price shall also include equipment decontamination; the collection of residuals generated during decontamination and placement of such material in the WSA; and the collection and disposal of liquids generated during equipment decontamination activities.

Payment for disposal of materials found to be non-hazardous based upon characterization sampling results will not be made under this item, but under the appropriate Contract item.

Pay Item	Pay Unit
Disposal of Hazardous Waste	TON

ITEM #0101128A - SECURING, CONSTRUCTION AND DISMANTLING OF A WASTE STOCKPILE AND TREATMENT AREA

Description:

Work under this Item shall consist of the securing, construction and dismantling of the temporary Waste Stockpile Area at the location designated on the Project Plans and in accordance with the Contract. All controlled and hazardous materials excavated during construction activities shall be stockpiled in the WSA. The WSA shown on the Plans is to be used exclusively for temporary stockpiling of excavated materials from within Project AOEC(s) and Hazardous AOEC(s) for determination of disposal classification.

Materials:

The required materials are detailed on the Project Plans. All materials shall conform to the requirements of the Contract.

Construction blocks shall be solid precast rectangular concrete six feet in length, three in height, and two feet in depth.

Polyethylene plastic sheeting for underlayment shall be a thickness of 30 mil and minimum width of ten feet.

Sand bags used to secure polyethylene sheeting soil covers shall have a minimum weight of thirty pounds.

Bedding sand shall conform to Section 6.51.02 of the Specifications.

Processed Aggregate Base shall conform to Section 3.04 of the Specifications.

Hay bales shall conform to the requirements of Section 2.18 of the Specifications.

Bituminous Concrete shall conform to Section 4.06 of the Specifications.

Roll-off/Storage Containers shall be of watertight, steel-body construction, of the size specified and able to handle the storage and subsequent transportation of material to the disposal facility.

Precast Concrete Barrier Curb shall conform to Section 8.22 of the Specifications.

Construction Methods:

The WSA shall be constructed in accordance with the Contract at the location shown on the Project Plans.

Construction of the WSA shall be completed prior to the initiation of construction activities generating Controlled or Hazardous Materials. The Contractor is responsible for the maintenance and protection of all utilities potentially affected during WSA construction. The Contractor shall locate and mark all existing utilities potentially affected prior to initiating WSA construction.

The proposed location of the WSA shall be cleared of any debris and vegetation as directed by the Engineer. Any objectionable materials, which may result in damage to the polyethylene sheeting underlayment, shall be removed prior to stockpiling excavated controlled or hazardous materials.

The Contractor shall comply with the terms and conditions of the DEP "General Permit for Contaminated Soil and/or Sediment Management (Staging and Transfer)", including the General Operating Conditions and the Specific Operating Conditions, except that the Engineer will conduct all soil/sediment characterization and perform all record keeping. In particular, the Contractor shall:

1. Construct and repair the WSA in conformance with the requirements of the General Permit.
2. Prevent unauthorized entry onto the stockpiles by the use of fences, gates, or other natural or artificial barriers.
3. Install anti-tracking measures at the WSA to ensure the vehicles do not track soil from the WSA onto a public roadway at any time.

Following the removal of all stockpiled material, the Contractor shall use dry decontamination procedures for all surfaces of the WSA as directed by the Engineer. Residual materials shall be disposed of as Controlled or Hazardous Materials. If the results from dry methods are unsatisfactory to the Engineer, the Contractor shall modify decontamination procedures as required.

The Contractor shall be responsible for the collection and treatment/recycling/disposal of any liquid wastes that may be generated by its decontamination activities in accordance with applicable regulations.

Upon completion of the Project and following removal of all residual Controlled or Hazardous Materials, the Contractor shall dismantle the WSA and return the area to original condition. During dismantling, the Contractor shall remove all materials such as polyethylene sheeting and sand bags. Materials shall be disposed of by the Contractor as solid waste in accordance with the Contract and all Federal, State and local regulations.

Operation and maintenance of the WSA shall be included under Item 101117A "Controlled Material Handling" and/or Item 101109A "Hazardous Materials Excavation".

Method of Measurement:

This work will be measured for payment at the Lump Sum cost for securing, construction, and dismantling of a WSA.

Basis of Payment:

This work will be paid for at the Contract Lump Sum, which shall include all materials, tools, labor, equipment, permits, and work needed to secure, construct, decontaminate and dismantle the WSA, including all clearing, grubbing, grading, clean up, site restoration and seeding.

All materials, labor and equipment associated with compliance with the General Permit for Contaminated Soil and/or Sediment Management (Staging and Transfer) will not be measured separately, but will be considered incidental to the item "Securing, Construction and Dismantling of a Waste Stockpile and Treatment Area".

Pay Item	Pay Unit
Securing, Construction and Dismantling of a Waste Stockpile and Treatment Area	LS

ITEM #0101130A - ENVIRONMENTAL WORK - SOLIDIFICATION

Description:

Under this item, the Contractor shall be responsible for the solidification of controlled and hazardous materials containing free draining liquids, as may be necessary during the performance of work operations prior to off-site disposal. Materials shall be dewatered prior to the addition of solidification material.

The Contractor shall submit within seven (7) days of the Notice to Proceed, for the Engineer's review, a detailed methodology and plan of operation for the solidification of materials.

Materials:

The materials used for solidification shall be a naturally occurring material such as diatomaceous earth or other material as approved by the Engineer. Said material shall be in a dry state prior to use in solidification operations. No polymers or other synthetic materials shall be allowed.

Construction Methods:

Submittals:
The Contractor shall submit for the Engineer's review, a plan showing the location of solidification material storage and proposed mixing location as well as a detailed narrative describing the equipment, materials and methodology to be used. The Contractor shall also include its planned methods to remove or drain away free water prior to the addition of any solidification materials to controlled or hazardous materials. The methodology shall completely describe the Contractor's proposed plan for removal of free liquids (as determined by ASTM) from the excavated materials. Should solidification fail to eliminate free liquids as proposed, the Contractor will be required to revise the solidification plan at no additional cost to the State.

Upon visual examination, if controlled or hazardous materials have free liquids present, the Contractor may, with concurrence of the Engineer, add dry materials to absorb free-standing liquids, utilizing a methodology accepted by the Engineer. The Contractor shall dewater controlled and hazardous materials prior to the addition of solidification materials to the satisfaction of the Engineer. All dewatering fluids shall be handled in accordance with the Contract. Solidification procedures shall be subject to monitoring by the Engineer.

The maximum quantity of solidification material that may be used by the Contractor shall be limited to twenty (20) percent, by volume, of the material being solidified. Should this procedure be demonstrated as not effective in the elimination of the presence of free-standing liquids, the Contractor shall submit methods for the removal of free-standing water. The Contractor shall also submit the additional costs of the proposed alternative to the Engineer for review. No alternative methods of solidification shall be initiated until reviewed and accepted by the Engineer.

Method of Measurement:

This work will be measured for payment as the actual weight of solidification material used by the Contractor. The Contractor shall demonstrate the amount of solidification material used by the original weight tickets from a certified scale. The weight tickets shall show the weight of the material brought to the site and subsequently used in solidification operations.

If no certified scale is available, the Engineer may allow for the calculation of the weight by a summation of sealed, pre-measured bags.

Basis of Payment:

This work will be paid for at the Contract unit price for solidification material used and accepted by the Engineer. Such price shall include all labor, materials, tools, and equipment incidental to the work including transportation of the materials to the Project and the addition of solidification material to excavated materials.

Pay Item	Pay Unit
Environmental Work - Solidification	TON

ITEM #0101164A – TREATMENT SYSTEM OPERATION

Description:

Work under this Item is intended for the Contractor to provide qualified labor as required for the standard operation and maintenance of an On-Site Treatment System. The treatment system design, all components, and permit registration/compliance shall be paid for under Item No. 0204213A – Handling of Contaminated Groundwater.

The Contractor shall provide an individual who inspects, operates, collects all samples related to permit compliance, and performs general system maintenance (i.e. electrical repair, piping repair, system sensor recalibration and system control troubleshooting, etc.) on the On-Site Treatment System.

Construction Methods:

The Contractor shall be capable of operating, sampling, and providing general maintenance to the system to ensure continued operation of the On-Site Treatment System. The Contractor shall ensure that all personnel involved in the water treatment operations understand the terms of the General Permit. In the event of a conflict between the requirements of the Contract and the permit, the more stringent will apply. The Contractor shall take all meter readings required by the permit and forward them to the appropriate parties. The Contractor shall collect all samples related to permit compliance in the presence of the Engineer.

The Contractor is responsible for operating and maintaining the equipment at all times when dewatering in AOECs occurs. This includes providing appropriate supervision during evenings, weekends, and holidays. If the system is intended to operate unattended, a remote alarm system acceptable to the Engineer shall be installed to monitor critical system operating parameters and the Contractor shall be responsible for providing rapid emergency response during non-working hours in the event a system malfunction occurs. A list of names and phone numbers shall be displayed in the immediate vicinity of the system for emergency contacts.

Method of Measurement:

The work of "TREATMENT SYSTEM OPERATION" will be measured on daily rate basis.

Basis of Payment:

This work shall be paid at the contract unit price for each day of service provided at the site for the Treatment System Operation. The prices paid for this item of work will represent reimbursement for all costs for these services, including tools of the trade, payment of prevailing wages, benefits, overhead, profit, union dues, insurance, home office overhead and supervision and any and all fees and costs that may apply. The same rate shall apply whether work is

performed during a regularly scheduled shift or on overtime, weekends or holidays. The City of Meriden reserves the right to determine the number and type of personnel employed and assigned to the work. **No separate payment shall be made for travel time to and from the site.**

Pay Item	Pay Unit
Treatment System Operation	DAY

ITEM #0201001A – CLEARING AND GRUBBING
ITEM #0201451A – TEMPORARY PROTECTIVE FENCE

Work under this item shall conform to the requirements of Section 2.01, amended as follows:

Materials:
Add the following:

Fence fabric shall conform to the following:

Fabric: High visibility, orange plastic mesh fence
1. Mesh Opening: 3.25-inch by 1.75-inch.
2. Minimum Roll Width: 4 feet.
3. Temperature Service Range: Minus 40 to plus 200 degrees F.
4. Manufacturer:
    a. National Wire.
    b. Conwed.
    c. Or equal.

Construction Methods:
Add the following:

With the exception of areas specifically delineated on the plans for access to work areas or other areas requested in writing by the Contractor, the limits of clearing and grubbing for the project shall be the limit of the sedimentation control system of as shown on the plans.

After construction staking has been completed, the sedimentation control systems shall be installed as shown on the plans to define in the field the limit of grubbing adjacent to the watercourses.

Temporary Protective Fence:
1. Shall be installed to isolate work areas from pedestrian and vehicular traffic, as documented in the Maintenance and Protection of Traffic Plan submittal, to be submitted by the Contractor and approved by the Engineer, or where directed by the Engineer in the field.
2. Drive posts into ground a minimum of 12 inches. Locate fabric splices at posts only. Provide 6” overlap.

Method of Measurement:
Add the following:

Temporary Protective Fence will be measured by the linear foot along the top the Temporary Protective fence actually installed and accepted.

The work, materials, tools, equipment, labor, and hauling incidental to the stockpiling of woody debris and relocated private signs will not be measured for payment.

Basis of Payment:
Add the following:

All costs incidental to the removal of existing trees within the slope limits will be included in the lump sum price of "Clearing and Grubbing".

Temporary Protective Fence will be paid at the contract unit price by the linear foot installed and accepted including materials, equipment, tools, and labor incident to the Work, and the following:

1. Maintenance and replacement of barrier fence as directed;
2. Relocation and resetting of barrier fence, including relocating and resetting of barrier fence posts, if included;
3. Removing and disposing of barrier fence; and
4. Restoration and grading of the areas to the satisfaction of the Engineer.

No separate payment will be made for the construction and removal of the temporary fence, posts, and gates. Payment for this work will be included as part of the "Temporary Protective Fence" item.

All costs incidental to the removal and resetting of ornamental items and the removal and replacing of underground wiring within the slope limits will be included in the lump sum price of "Clearing and Grubbing".

All costs incidental to the stockpiling of woody debris, including all work, materials, tools, equipment, labor, and hauling will be included in the lump sum price of "Clearing and Grubbing".

All costs related to the construction staking for the purposes of determining the limits of clearing and grubbing shall be included in the lump sum price for "Construction Staking".

All costs incidental to the removal and relocation of private signs including all work, materials, tools, equipment, labor, and hauling will be included in the lump sum price of "Clearing and Grubbing".

Pay Item	Pay Unit
Clearing and Grubbing	L.S.
Temporary Protective Fence	L.F.

ITEM #0201001A
ITEM #0201451A

ITEM #0202000A – EARTH EXCAVATION
ITEM #0202200A – CHANNEL EXCAVATION-EARTHWORK
ITEM #0202401A – REMOVAL OF TEMPORARY PAVEMENT
ITEM #0202483A – REMOVAL OF BITUMINOUS CURB
ITEM #0202502A – REMOVAL OF CONCRETE BUILDING SLAB
ITEM #0202503A – REMOVAL OF CONCRETE CURB
ITEM #0202513A – REMOVAL OF CONCRETE SIDEWALK
ITEM #0202515A – REMOVAL OF CONCRETE APRON
ITEM #0202530A – REMOVAL OF BITUMINOUS SURFACE

Work under this item shall conform to the requirements of Section 2.02, amended as follows:

Materials:

Add the following:

Materials shall conform to utility requirements.

Construction Methods:

Add the following:

Bituminous concrete pavement will be excavated in a separate operation and will be disposed of properly. Bituminous concrete pavement is not allowed as backfill material unless it is processed and used in the construction of the roadway pavement section.

The excavation of existing processed aggregate base and subbase shall be accomplished to allow the reuse of these materials. This includes all site handling and stockpiling of the material. The reused material will be utilized to offset the importing of subbase within the project area.

The Removal of Bituminous Surface is denoted throughout the project area. This will include the removal and handling of the material on site and the proper disposal of the material.

The Removal of Bituminous Curb is denoted throughout the project area. This will include the removal and handling of the material on site and the proper disposal of the material.

The Removal of Concrete Building slab is denoted by the fenced in area in AEOC-5. The floor slab is covered with soil and minor vegetation. The Contractor will remove the slab as indicated and proceed with the excavation of the soil underneath it as shown on HM- 101.

Removal of Concrete Sidewalk occur throughout the project area. The Contractor, as part of his work will remove concrete sidewalks once the sidewalks are closed to pedestrian traffic.

The Removal of Concrete Apron occurs in two areas. The first area is the pedestrian crossing within the site access at Hanover Street. The second area is the pedestrian crossing within the site access at Butler Street. The Contractor, as part of his work will remove the concrete apron once the adjacent sidewalks are closed to pedestrian traffic.

As indicated on the plans, the removal of concrete curbs occurs at various locations at the site.

Excavation for the removal of temporary pavement shall include the excavation temporary handling and removal of the 2-inch surface bituminous layer and 2-inch removal, handling and storage of process aggregate base.

Final excavation for roadway subgrades, including subgrades for embankment widening, channel excavation and removal of unsuitable material should be made using equipment with a smooth-edge blade or bucket. Vegetation and topsoil should be removed from areas prior to placing fill for embankment widening.

Embankment areas shall not be constructed during times of high water. The Contractor shall take care not to leave low lying excavations open and shall place fill and embankment material immediately after excavation. Excavations that require dewatering shall comply with the requirements of Handling Water.

Method of Measurement:

Add the following:

Overhaul will not be considered part of the work. The Contractor shall consider the entire project work area as one site.

The Cutting of Bituminous Concrete will not be measured for separate payment.

The Removal of Concrete Floor Slab will be measured by the number of square yards that is completed and accepted.

The Removal of Concrete sidewalk will be measured by the number of square yards that is completed and accepted. This includes varying thicknesses and styles of sidewalk, including but not limited to curb-face sidewalk, sidewalk ramps and sidewalk.

The Removal of Concrete Apron will be measured by the number of square yards that is completed and accepted.

The removal of concrete curb will be measured by the number of linear feet that is completed and accepted.

The Removal of Temporary Pavement will be measured by the number of square yards that is completed and accepted.

Basis of Payment:

Add the following:

The Cutting of Bituminous Concrete is incidental and will paid for as a portion of the work of the associated contract items.

The work will be paid for at the contract unit price per square yard for "Removal of Concrete Building Slab," "Removal of Concrete Sidewalk", "Removal of Concrete Apron", and "Removal of Concrete Apron" complete in place which price shall include excavation, site handling, breaking of material for disposal off-site, and any associated environmental conditions and all materials, tools, equipment, labor and work incidental thereto.

The work will be paid for at the contract unit price per linear foot for "Removal of Concrete Curb" complete which price shall include excavation, site handling, on-site storage, and disposal from the site and all materials, tools, equipment, labor and work incidental thereto.

The work will be paid for at the contract unit price per square yard for "Removal of Temporary Pavement" complete in place which price shall include excavation, site handling, on-site storage of material for reuse on site, and all materials, tools, equipment, labor and work incidental thereto.

The work will be paid for at the contract unit price per square yard for "Removal of Bituminous Surface" complete in place which price shall include excavation, removal, site handling, disposal and all materials, tools, equipment, labor and work incidental thereto.

The work will be paid for at the contract unit price per linear foot for "Removal of Bituminous Curb" complete in place which price shall include excavation, removal, site handling, disposal and all materials, tools, equipment, labor and work incidental thereto.

Pay Item	Pay Unit
Earth Excavation	CY
Channel Excavation-Earthwork	CY
Removal of Concrete Building Slab	SY
Removal of Concrete Sidewalk	SY
Removal of Concrete Apron	SY
Removal of Concrete Curb	LF
Removal of Temporary Pavement	SY
Removal of Bituminous Surface	SY
Removal of Bituminous Curb	LF

ITEM #0202216A – EXCAVATION AND REUSE OF EXISTING CHANNEL BOTTOM MATERIAL

Description:

This work shall consist of excavating existing channel bottom material, herein referred to as natural channel bed material, in areas where the channel bottom is to be disturbed and regraded to create a work area for a bridge, culvert, articulated concrete block placement, cofferdam installation, as shown on the plans or as directed by the Engineer. This item shall also include the stockpiling and protecting of the excavated material on-Site, subsequent placement, top dressing, or backfilling of the excavated stockpiled material within the watercourse, as shown on the plans or as directed by the Engineer.

Materials:

The material for this item shall consist of the existing naturally-formed rocks, cobbles, gravel, soils and clean natural sediments from within the channel.

Any material excavated from shale, ledge (bedrock) formations broken from larger boulders, or material with sharp acute edges will not be accepted. Broken concrete will not be accepted.

Geotextile: Geotextile shall be as specified in M.08.01-19 Geotextiles.

Construction Methods:

1. Stockpiling of Material. The Contractor shall submit for the Engineer's approval a proposed location for stockpiling material. The proposed location shall be upland where disruption to the channel or impact to wetland areas caused by moving the natural channel bed material to and from the stockpile are minimized. The Contractor shall prepare the area approved by the Engineer, suitable in size and location for stockpiling the natural channel bed material.

The stockpile shall be located where it can remain undisturbed for the duration of the channel reconstruction or as shown on the plans and shall be protected using sedimentation control measures. The stockpile area shall be free of debris and cleaned adequately to prevent mixing with underlying soil or other materials, including the use of a separation barrier such as: high-survivability geotextile fabric, polyethylene sheeting, or similar. The stockpile area shall be adequately covered to protect the excavated natural bed material from erosion by rain, wind, or other forces.

2. Excavation of Natural Channel Bed Material. The Contractor shall notify the Engineer 10 days in advance of excavation and placement of natural channel bed material activities. The Contractor shall layout the horizontal excavation limits for the abutments, walls and riprap locations with respect to the edge of the existing channel bed. The Engineer will identify and confirm the limits of the exposed natural channel bed material during excavation under this item. The Engineer will identify the bottom limit of excavation, an amount up to but not exceeding 24

inches in depth, unless approved by the Engineer or their authorized delegate, based upon visual inspection of the natural channel bed material. After the limits of excavation have been determined, the Contractor shall excavate the natural channel bed material, separate from any other roadway, structure, channel or unsuitable material excavation on Site. After the natural channel bed material has been excavated, it shall be placed in the pre-approved stockpile area.

3. Backfilling and Placement with Natural Channel Bed Material. The stockpiled natural channel bed material shall be placed as fill material as specified at the designated location(s) to the required thickness and elevation as shown on the plans or as directed by the Engineer or their authorized delegate. Placement methods likely to cause segregation of the various sizes of stone will not be permitted. Placement techniques shall prevent integration with non-natural channel bed material and shall keep the natural channel bed material relatively homogenous. The natural channel bed material shall be placed in a manner that replicates the original condition of the channel prior to excavation and to the elevation as shown on the plans.

4. Top Dressing with Natural Channel Bed Material. The stockpiled natural channel bed material shall be used as top dressing over riprap or other material as specified at the designated location(s) to the required thickness and elevation as shown on the plans or as directed by the Engineer or their authorized delegate. Placement techniques shall prevent integration with the non-natural channel bed material and shall keep the natural channel bed material relatively homogenous. The natural channel bed material shall be placed in a manner that replicates the original condition of the channel prior to excavation and to the elevation as shown on the plans.

5. Site Maintenance. When backfilling, placing, or top dressing, the Contractor shall perform all containment, diversion, or other separation of the channel flow to minimize sediment transport down channel.

In the event there is surplus channel bottom material, the Contractor shall located and stockpile material for reuse as a later time.

If the Engineer determines that there is an insufficient quantity of natural channel bed material within the Project limits, the Contractor shall procure Supplemental Channel Bed Channel Material as specified under Item #0202217A.

If it is required for the Project to have washing-in of supplemental channel bed material, the Contractor shall procure Washing-in Supplemental Channel bed Material as specified under Item #0202218A.

The pre-approved stockpile areas shall be restored to the satisfaction of the Engineer. Work to restore/regrade stockpile areas will be paid for under the respective pay item(s).

Method of Measurement:

This work will be measured for payment by the number of cubic yards of natural channel bed material excavated, stockpiled, maintained, installed, and accepted.

The Engineer will delineate the horizontal pay limit prior to the start of excavation. The vertical pay limit will be measured from the top of the existing channel bottom to the bottom of excavation required specifically for the stockpiling of channel bottom material.

Any material excavated beyond the approved horizontal pay limits or deeper than the depth of natural channel bed material identified and approved by the Engineer will be measured for payment separately under the applicable pay item(s). Additional excavation required to complete the Contract work will be measured for payment separately under the applicable pay item(s).

Basis of Payment:

Payment for this work will be made at the Contract unit price per cubic yard for "Excavation and Reuse of Existing Channel Bottom Material." The price shall include all materials, equipment, geotextile, tools, and labor incidental to the preparation of the stockpile area, excavation of natural channel bed material, hauling and handling of the material to the stockpile, and separation of any rock ledge or concrete debris, storing, and protecting (including sedimentation controls and covering) excavated material.

Payment for clearing and grubbing of the approved stockpile area will be included in the item "Clearing and Grubbing."

Riprap or other specified material as shown on the plan will be paid for under the respective items.

Payment for Supplemental Channel Bed Material will be included in the Item #0202217A "Supplemental Channel bed Material.," which will also include the removal of any surplus or suitable material that it displaces.

Payment for washing in supplemental channel bed channel material will be included in the Item #0202218A "Washing-in Supplemental Channel bed Material.".

Payment for the channel excavation and removal and proper disposal of an all surplus and/or unsuitable material be included in item that it displaces. Additional approved channel excavation and disposal of surplus and unsuitable material will be paid as "Channel Excavation – Earth" ,

Payment for all containment, diversion or other separation of channel flow will be included in the item "Cofferdam and Dewatering" or special provision for "Handling Water."

Pay Item	Pay Unit
Excavation and Reuse of Existing Channel Bottom Material	CY

ITEM #0202315A - DISPOSAL OF CONTROLLED MATERIALS

Description:

Work under this item shall consist of the loading, transportation and final off-site disposal/ recycling/treatment of controlled materials (excluding dewatering fluids) that have been generated from various excavations within the AOEC(s), brought to the WSA and determined to be contaminated with regulated substances at non-hazardous levels. This contamination is documented in the reports listed in the "Notice to Contractor – Environmental Investigations." The results contained in the environmental investigation reports listed in the "Notice to Contractor – Environmental Investigations" show levels of various contaminants that the Contractor may encounter during construction. Actual levels found during construction may vary and such variations will not be considered a change in condition provided the material can still be disposed as non-hazardous at one or more of the disposal facilities listed herein. The controlled materials, after proper characterization by the Engineer, shall be taken from the WSA, loaded, transported to and treated/recycled/disposed of at a permitted treatment/recycle/disposal facility listed herein.

The Contractor must use one or more of the Department-approved treatment/recycle/ disposal facilities for the disposal of non-hazardous materials shown on the table *ConnDOT Approved Treatment, Storage, and Disposal Facilities, Dated March 2023* that is at the end of this section.

Note: each bin will require an additional 10 days (or more) for PADEP to review analytical data and approve material for disposal prior to facility acceptance of material. This is in addition to all other restrictions and wait periods defined below.

The above list contains treatment/recycle/disposal facilities which can accept the waste stream generated by the project in quantities that may be limited by their permits and their operations restrictions. It is the responsibility of the contractor to verify that a facility will be available and capable of handling the volume as well as the chemical and physical characteristics of material generated by the project.

Construction Methods:

A. Material Disposal

The Engineer will sample materials stored at the WSAs at a frequency established by the selected treatment/recycling/disposal facilities. The Contractor shall designate to the Engineer which facility it intends to use, as well as the facility acceptance criteria and sampling frequency, prior to samples being taken. The Contractor is hereby notified that laboratory turnaround time is expected to be fifteen (15) working days. Turnaround time is the period of time beginning when the Contractor notifies the Engineer which facility it intends to use and that the bin within the WSA is full and ready for sampling and ending with the Contractor's receipt of the laboratory analytical results. Any change of intended treatment/recycling/disposal facility may prompt the

need to resample and will therefore restart the time required for laboratory turnaround. The laboratory will furnish such results to the Engineer. Upon receipt, the Engineer will make available to the Contractor the results of the final waste characterization determinations. **No delay claim will be considered based upon the Contractor′s failure to accommodate the laboratory turnaround time as identified above.**

The Contractor shall obtain and complete all paperwork necessary to arrange for material disposal (such as disposal facility waste profile sheets). It is solely the Contractor's responsibility to co-ordinate the disposal of controlled materials with its selected treatment/recycling/disposal facility(s). Upon receipt of the final approval from the facility, the Contractor shall arrange for the loading, transport and treatment/recycling/disposal of the materials in accordance with all Federal and State regulations. **No claim will be considered based on the failure of the Contractor's selected disposal facility(s) to meet the Contractor's production rate or for the Contractor's failure to select sufficient facilities to meet its production rate.**

Any material processing (including but not limited to the removal of woody debris, scrap metal, pressure-treated and untreated wood timber, large stone, concrete, polyethylene sheeting or similar material) required by the Contractor's selected facility will be completed by the Contractor prior to the material leaving the site. It is solely the Contractor's responsibility to meet any such requirements of its facility. Any materials removed shall be disposed of or recycled in a manner acceptable to the Engineer at no additional cost. If creosote treated timbers are removed, they will be disposed of under the item "Disposal of Contaminated Timber Piles", "Disposal of Contaminated Railroad Ties" or in accordance with Article 1.04.05 in the absence of such items.

All manifests or bills of lading utilized to accompany the transportation of the material shall be prepared by the Contractor and signed by an authorized Department representative, as Generator, for each truck load of material that leaves the site. The Contractor shall forward the appropriate original copies of all manifests or bills of lading to the Engineer the same day the material leaves the Project.

A load-specific certificate of treatment/recycling/disposal, signed by the authorized agent representing the disposal facility, shall be obtained by the Contractor and promptly delivered to the Engineer for each load.

B. Material Transportation

In addition to all pertinent Federal, State and local laws or regulatory agency polices, the Contractor shall adhere to the following precautions during the transport of controlled materials off-site:

- Transported controlled materials are to be covered sufficiently to preclude the loss of material during transport prior to leaving the site and are to remain covered until the arrival at the selected treatment/recycling/disposal facility.

- All vehicles departing the site are to be properly logged to show the vehicle identification, driver′s name, time of departure, destination, and approximate volume, and contents of materials carried.

- No materials shall leave the site unless a treatment/recycling/disposal facility willing to accept all of the material being transported has agreed to accept the type and quantity of waste.

C. Equipment Decontamination

All equipment shall be provided to the work site free of gross contamination. The Engineer may prohibit from the site any equipment that in his opinion has not been thoroughly decontaminated prior to arrival. Any decontamination of the Contractor's equipment prior to arrival at the site shall be at the expense of the Contractor. The Contractor is prohibited from decontaminating equipment on the Project that has not been thoroughly decontaminated prior to arrival.

The Contractor shall furnish labor, materials, tools and equipment for decontamination of all equipment and supplies that are used to handle Controlled Materials. Decontamination shall be conducted at an area designated by the Engineer and shall be required prior to equipment and supplies leaving the Project, between stages of the work, and between work in different AOEC's.

The Contractor shall use dry decontamination procedures. Residuals from dry decontamination activities shall be collected and managed as Controlled Materials. If the results from dry methods are unsatisfactory to the Engineer, the Contractor shall modify decontamination procedures as required.

The Contractor shall be responsible for the collection and treatment/recycling/disposal of any liquid wastes that may be generated by its decontamination activities in accordance with applicable regulations.

Method of Measurement:

The work of "DISPOSAL OF CONTROLLED MATERIALS" will be measured for payment as the actual net weight in tons of material delivered to the treatment/recycling/disposal facility. Such determinations shall be made by measuring each hauling vehicle on the certified permanent scales at the treatment/recycling/disposal facility. Total weight will be the summation of weight bills issued by the facility specific to this Project. Excess excavations made by the Contractor beyond the payment limits specified in Specification Sections 2.02, 2.03, 2.06, and 2.86, or the Contract Special Provisions (as appropriate) will not be measured for payment and the Contractor assumes responsibility for all costs associated with the appropriate handling, management and disposal of this material.

The disposal of excavated materials, originally anticipated to be controlled materials, but determined by characterization sampling <u>not</u> to contain concentrations of regulated chemicals

(non-polluted or "clean" materials) will not be measured for payment under this item but will be considered as surplus excavated materials and will be paid in accordance with Article 1.04.05.

Any materials stored in the WSAs, and which are reused within Project limits, will not be measured for payment under this item. This material will be paid for under Item 0202318A – Management of Reusable Controlled Material or in accordance with Article 1.04.05 in the item's absence.

Equipment decontamination, the collection of residuals, and the collection and disposal of liquids generated during equipment decontamination activities will not be measured separately for payment.

Any material processing required by the Contractor-selected disposal facility, including the proper disposal of all removed materials other than creosote treated wood, will not be measured for payment.

Basis of Payment:

This work will be paid for at the Contract unit price, which shall include the loading and transportation of controlled materials from the WSAs to the treatment/recycling/disposal facility; the fees paid to the facility for treatment/recycling/disposal; sampling and laboratory testing; the preparation of all related paperwork; and all equipment, materials, tools, and labor incidental to this work. **This unit price will be applicable to all of the listed disposal facilities and will not change for the duration of the Project.**

This price shall also include equipment decontamination; the collection of residuals generated during decontamination and placement of such material in the WSA; and the collection and disposal of liquids generated during equipment decontamination activities.

Pay Item	Pay Unit
Disposal of Controlled Materials	TON

ITEM #0202318A - MANAGEMENT OF REUSABLE CONTROLLED MATERIAL

Description:

Work under this item shall include all materials, equipment, tools and labor required to load, transport from the WSA, place, and compact reusable controlled materials in fill areas located within the Project limits. "Reusable controlled material" is soil that contains contaminant concentrations above analytical detection limits, but below the applicable regulatory criteria.

Construction Methods:

Controlled material stored within the WSA which is determined to be reusable following analytical testing shall be loaded, transported, placed and compacted at fill areas located within the Project limits in accordance with the following conditions: (1) such soil is deemed to be structurally suitable for use as fill by the Engineer; (2) such soil is not placed below the water table; 3) the DEP groundwater classification of the area where the soil is to be reused as fill does not preclude said reuse; and (4) such soil is not placed in an area subject to erosion.

Method of Measurement:

"Management of Reusable Controlled Material" will be measured for payment by the number of cubic yards of material loaded and transported from the WSA and placed at fill areas located within the Project limits in accordance with the Contract.

Basis of Payment:

"Management of Reusable Controlled Material" will be paid for at the Contract unit price, which shall include all materials, equipment, tools and labor necessary to load and transport reusable controlled materials from the WSA to fill areas located within the Project limits and to place and compact the reusable material. This price shall include any decontamination of soil handling equipment, and the treatment/recycling/disposal of wastes generated in conjunction with such decontamination.

No separate payment will be made for consolidating previously tested individual stockpiles that have been deemed reusable, but shall be considered incidental to the work.

The disposal of any reusable controlled material that fails to meet material testing requirements for the intended use in accordance with the Contract requirements, as well as any excess reusable material, will be paid under Item 202315A, "Disposal of Controlled Material".

Pay Item	Pay Unit
Management of Reusable Controlled Materials	CY

ITEM #0202450A – VIDEO INSPECTION SURVEYS AND REPORT

Description:

Work under this item shall include Pre-Construction Video Survey and Report of the project area.

Materials:

Submit 3 copies of both Preconstruction Video Survey and Reports in DVD and hard copy PDF format.

Construction Methods:

The Contractor shall conduct a preconstruction survey performed by an independent Professional Engineer, sufficiently detailed, of existing conditions of bridge structures, roadways, sidewalks, parking areas, grounds, walls, signs and surface utilities signals and channel to provide complete coverage of the project site, adjoining construction, and site improvements. This video survey and report shall be similar to a pre-blast survey. The video shall be supplemented by an audio narration noting exterior existing conditions of the property. The locations and the conditions of each site improvement shall be included.

Method of Measurement:

Payment under this item will not be measured for payment and will be earned in proportion to the value of item that is completed and accepted.
for payment.

Basis of Payment:

This work will be paid for at the contract lump sum price for "Video Survey and Report", which price shall include all materials, equipment, tools, and labor incidental to the completion of this item.

Pay Item	Pay Unit
Video Inspection Surveys and Report	LS

ITEM #0202452A - TEST PITS

Description:

Test pits shall be performed for determining the location of underground utilities. This work shall consist of the removal and satisfactory disposal of all materials, the removal of which is necessary for the proper completion of the work, at the locations show on the plans or as ordered, and backfilling, all in accordance with these specifications.

Utility facilities to be located shall include pipes, conduits, service connections, handholes, structures, tanks, utility appurtenances, and any miscellaneous items directed by the Engineer such as telltales/ markers on the existing pipes, etc.

Construction Methods:

Test pits shall be made in conformity with the requirements of the plans or as ordered by the Engineer. The Contractor shall furnish and employ such shores, braces, pumps, etc., as may be necessary for the protection of property, proper completion of the work and the safety of the public and employees of the Contractor and the Department. All bracing, etc., shall be removed when no longer required for the construction or safety of the work.

Wherever portions of existing full-depth bituminous concrete pavement are to be removed in conjunction with test pits, they shall be removed to neat lines. Where the limits of the areas in which such bituminous pavement is to be removed are adjacent to existing bituminous concrete pavement that is to remain in place, the limits shall be cut by a method approved by the Engineer.

The Contractor shall perform field surveys to establish the horizontal and vertical location and to document the type and size of the utilities at each test pit. The work shall be performed in accordance with the requirements of Section 9.80, Construction Staking. The Contractor shall furnish the Engineer copies of all test pit data.

After the test pit is completed, the Contractor shall notify the Engineer. The test pit shall not be backfilled until directed by the Engineer.

When backfilling is required, the material used shall be of a quality satisfactory to the Engineer and shall be free from large or frozen lumps, wood, and other extraneous material. All backfill placed below subgrade shall be placed in layers of not more than 6 inches (150 millimeters) in depth after compaction and shall be thoroughly compacted by means of mechanical rammers or vibrators or by pneumatic tampers. Hand tampers shall be used only upon written permission of the Engineer. Unless otherwise ordered by the Engineer, the backfill shall be brought to the surface of the surrounding ground or subgrade and neatly graded.

All suitable material removed in making the excavation shall be used for backfill unless otherwise directed by the Engineer. All surplus or unsuitable material shall be removed and disposed of as directed and in accordance with the handling and disposal of controlled material,

as required. Should additional material be required for backfilling, it may be obtained from the Project excavation or from borrow pits, gravel pits, or elsewhere as the Engineer may direct.

Test pits performed within Areas of Environmental Concern (AOEC) or Low Level Areas of Environmental Concern (LLAOEC) shall meet the requirements for controlled material handling listed elsewhere in the specifications. Excess material generated from these areas which cannot be reused back on-site will require disposed in accordance with the applicable specifications and will be paid for under the appropriate environmental items and not included in the cost of the test pit. Test Pits performed in the area of Environmental Land Use Restrictions (ELUR) on and adjacent to the Materials Innovation and Recycling Authority (MIRA) property shall meet the requirements for ELUR soil management and restoration listed elsewhere in the specifications. If any of the existing engineered controls are encountered and impacted in the ELUR they shall be restored in accordance with the specification for ELUR Soil Management and Restoration and paid for separately under the corresponding item.

Method of Measurement:

Test pits will be measured as each excavated, backfilled, surveyed, documented, and accepted per site and as directed by the Engineer. There will be no separate measurement for mobilization and demobilization associated with this item.

Basis of Payment:

Test Pits will be paid for at the contract unit price each complete in place and accepted, which price shall include all materials, equipment, tools, handhole extensions, covers, surveys, and labor incidental thereto per site.

The price shall also include backfilling, patching roadways, and sidewalks in kind, restoration of the ground where required and the disposal of unsuitable and surplus material. No additional payment will be made for shoring, bracing, pumping, and bailing or for material or equipment necessary for the satisfactory completion of the work. If “Granular Fill” or “Reuse Stockpiled Materials” are used for backfill, payment will be made at their respective contract unit prices. If handling and disposal of contaminated materials or restoration of ELUR engineered controls is required, they shall be paid for under the applicable items and not included in the cost of the test pit.

Pay Item	Pay Unit
Test Pit	EA

ITEM #0202640A - 2-INCH GROUNDWATER MONITORING WELL ABANDONMENT

Description:

Work under this item shall consist of the abandonment of 2-inch groundwater monitoring wells by a registered well driller at the locations shown on the Plans or as directed by the Engineer.

The well driller must be registered in the State of Connecticut in accordance with Regulations of Connecticut State Agencies (RCSA) Department of Consumer Protection (DCP) Regulations for the Well Drilling Industry, Sections 25-128-35, -58b and -60b.

Materials:

Groundwater monitoring wells shall be sealed with a grout complying with RCSA 25-128-36 (e.g., bentonite clay grout, bentonite cement grout, etc.

Construction Methods:

The Contractor shall submit the name of the registered driller and a copy of their Certificate of Registration, as indicated in the Connecticut Department of Consumer Protection (DCP) Regulations Section 25-128, at least fourteen (14) days prior to starting well abandonment work.

Seven existing 2-inch monitoring wells, as depicted on the Project Plans (Drawing HM-102) are to be abandoned. Prior to the planned excavation work, the Contractor shall confirm the location and depth of the subject wells. Wells with a total depth of up to 15 feet below ground surface (bgs), and located within the areas of planned excavation work (i.e., soil remediation) may be removed as a part of such work and will not require abandonment by a registered driller. Wells with a depth greater than 15 feet bgs must be properly abandoned by a registered driller prior to commencement of earthwork.

The Contractor shall coordinate the work of monitoring well abandonment with the Engineer. No such work shall be performed without the Engineer present to verify abandonment procedures.

Well Abandonment Procedure:

1. The well shall be plugged to prevent the entrance of surface water, circulation of water between or among producing zones, or any other process resulting in the contamination or pollution of groundwater resources.

2. The well shall be checked from land surface to the entire depth of the well before it is sealed to ensure against the presence of any obstruction that will interfere with sealing operations.

3. The well shall be filled and sealed with any of the following materials: neat cement grout, sand cement grout, bentonite clay grout, or sand clay or bentonite cement grout.

4. The grout material shall be placed in such a way to prevent voids in the grout or dilution of the grout.

5. The well shall be abandoned in such a manner that it does not become a channel for the vertical movement of water or other substance to the potable ground water resources.

6. Upon completion of abandonment of the well, the top of the casing and grout material shall not be terminated more than four feet below the ground surface of the final grade.

Within 30 days of completion of the well abandonment, the licensed well drilling contractor shall complete the DCP Well Abandonment, Verification of Work Completed Form, in accordance with CGS Section 25-131, and submit such form to the Engineer.

Method of Measurement:

Monitoring well abandonment will be measured for payment by the number of 2-inch groundwater monitoring wells abandoned at locations shown on the Plans and directed by the Engineer.

Basis of Payment:

This work will be paid for at the Contract unit price per well abandoned. Wells that are removed as a part of excavation that are not abandoned by a registered driller (i.e., are not called out to be removed wells up to 15 feet deep) will not be paid for under this item. This unit price shall include all equipment, materials and labor, including the furnishing of specialty services and specialized equipment, backfilling, excavation, and implementation of health and safety provisions incidental to the abandonment of the groundwater monitoring wells.

Pay Item	Pay Unit
2-Inch Groundwater Monitoring Well Abandonment	EA

ITEM #0204151A - HANDLING WATER

Description:

Work under this item shall consist of designing, furnishing, installing, maintaining, and removing of a temporary water handling system. This may include water-handling-cofferdams, bypass pipes, bypass pumps/hoses, temporary energy dissipation, sump pumps, drainage channels, water handling for ancillary drainage, and dewatering. A temporary water handling system redirects water beyond, through, or around the limits of construction to allow work to be done in the dry.

Materials:

The materials required for this work shall be as shown on the plans, on the accepted Contractor's Working Drawing submittal, or as ordered by the Engineer.

Construction Methods:

The Contractor shall prepare and submit written procedures for handling water. Working Drawings, in accordance with Article 1.05.02, shall also be prepared and submitted.

The Contractor shall consider stream conditions, water elevations, expected weather, and risks associated with the Site to determine the type of temporary water handling system required to redirect water away from work being performed. The system shall be designed to comply with the Temporary Hydraulic Table in the Contract plans and be compatible with the stage of construction and Maintenance and Protection of Traffic scheme, as indicated in the Contract, and shall conform to Section 1.10.

The Contractor shall be responsible for maintaining and repairing the water handling system throughout the duration of the Contract. If the system becomes damaged, displaced, or not functioning properly due to construction activities, stream conditions or storm events, the Contractor shall be responsible to remediate the system back to working order per plan or as required at the direction of the Engineer.

Unless otherwise directed by the Engineer, all temporary water handling system components shall be removed and disposed of off-site when no longer required.
Pumped water shall be in accordance with Article 2.04.03-2.

Method of Measurement:

The work under this item, being paid on a lump sum basis, will not be measured for payment.

Basis of Payment:

This work will be paid for at the Contract lump sum price for "Handling Water" complete and accepted, which price shall include designing (including submittals and Working Drawings), furnishing, installing, maintaining, and removing of all temporary water handling system components as are necessary for completion of the work. This price shall include all materials, equipment, tools, labor and work incidental thereto.

A schedule of values for payment shall be submitted to the Engineer for review and comment.

Pay Item	Pay Unit
Handling Water	LS

ITEM #0204213A - HANDLING CONTAMINATED GROUNDWATER

Description:

Under this Item, the Contractor shall collect, manage, treat, and dispose of contaminated groundwater generated during dewatering operations within the designated Groundwater Areas of Environmental Concern (GW AOECs) within the project limits.

Contaminated groundwater is defined as "groundwater which has been generated from excavations within the designated GW AOECs containing substances at concentrations that exceed the effluent limits for the DEEP General Permit for the Discharge of Groundwater Remediation Wastewater Directly to Surface Water". The presence of contaminants removable through control of settleable solids does not constitute contaminated groundwater. Groundwater contamination caused by the Contractor's activities or work practices is also not considered contaminated groundwater.

The contamination and groundwater depth at the time of the investigation is documented in the reports listed in the "Notice to Contractor – Environmental Investigations". Contaminants and depth to groundwater is provided for the Contractor's information and may be influenced by factors such as seasonal groundwater table changes, tidal changes, drought or flooding conditions, local withdrawals from the aquifer, local construction, etc. Additional information with regard to soil descriptions and groundwater observations may also be available if geotechnical investigations were conducted for the project. The Contractor shall contain contaminated groundwater and 1) treat it on-site prior to discharge to sanitary sewer; 2) treat it on-site prior to discharge to surface water; or 3) transport water to an off-site treatment/disposal facility.

This Item does not apply to the possible diversion of existing storm water flow around the construction site during Project activities. Diversion of existing storm water or surface flows shall be completed in accordance with the Contract and all applicable permits. This item also does not include process water or wastewater generated by the Contractor's work activities.

Construction Methods:

Submittals:
See Paragraph 1a. On-Site Treatment System with Discharge to Sanitary Sewer,
See Paragraph 2a. On-Site Treatment System with Discharge to Surface Water

A. General

The use of this item must be approved by the Engineer before mobilization of any treatment system equipment. It is the Contractor's responsibility to determine the expected groundwater generation rate from construction activities, select the appropriate groundwater management method, and size its system capacity to meet those dewatering needs.

All equipment required as a part of this Item shall be installed in a location and manner acceptable to the Engineer and in accordance with the manufacturer's recommendations. Equipment shall be decontaminated prior to arrival at the Project, decontaminated prior to being moved to another area of the project, and then decontaminated before it leaves the Project, at no additional cost to the City. Solids (soil or sediment) generated by on-site dewatering activities shall be brought to the Waste Stockpile Area (WSA) for testing and characterization by the Engineer.

The Contractor is responsible for operating and maintaining the equipment at all times when dewatering in the GW AOEC(s) occurs. This includes providing appropriate supervision during evenings, weekends, and holidays. If the system is intended to operate unattended, a remote alarm system acceptable to the Engineer shall be installed to monitor critical system operating parameters and the Contractor shall be responsible for providing rapid emergency response during non-working hours in the event a system malfunction occurs. A list of names and phone numbers shall be displayed in the immediate vicinity of the system for emergency contacts.

The Contractor shall report releases from the groundwater treatment system due to overfilling or equipment/piping failure to the DEEP Spill Response Unit in accordance with RCSA 22a-450 and provide the Engineer with all information, including the DEEP case number. All costs related to spill response associated with the Contractor's on-site containment or treatment system will be the responsibility of the Contractor.

The Contractor shall collect all samples related to permit compliance in the presence of the Engineer. The Contractor shall provide informational copies of all groundwater analytical results and discharge monitoring reports to the Engineer as they are generated.

The Contractor shall operate the dewatering equipment at a rate that removes the groundwater that naturally infiltrates the excavation. The Contractor shall not cause a hydraulic gradient that draws groundwater into the excavation at an excessive rate. Additional treatment required due to the mobilization of off-site contaminants caused by the Contractor dewatering at an excessive rate will be the responsibility of the Contractor.

Additional treatment related to the Contractor's work activities (i.e. treatment or increased charges due to changes in pH or introduction of different contaminants into the groundwater) and management and disposal of excess water related to the Contractor's process water or waste water will not be included under this item but will be considered a part of the Contractor's cost for the item under which the work is being performed.

B. Groundwater Management Methods

The Contractor shall use one or more of the following methods for the management and disposal of contaminated groundwater. Based on project specifics and site constraints, the Contractor may choose to use more than one of the following methods on a single project. All methods may not be possible at the site due to sanitary sewer or permitting restrictions.

1. On-Site Treatment System with Discharge to Sanitary Sewer

a. Contractor Submittals

At least 14 days prior to any submittal to the Publicly Owned Treatment Works (POTW) or DEEP, the Contractor shall submit the treatment system design, which has been sealed by a Professional Engineer licensed in the State of Connecticut to the Engineer for review and comment. Equipment shall prevent sediments and solids, as well as contaminants in excess of the permit allowable effluent concentrations, from entering the sanitary sewer. This submittal shall include a schematic or diagram that shows all treatment system equipment, well point locations, pump set-ups in excavations, sedimentation control methods, system location, method of conveyance, flow rates, pipe sizes, valve locations, sampling ports, discharge locations, electrical power connection, etc.

The Contractor shall submit the manufacturer's data sheets, assembly details and performance data on all treatment equipment. If dewatering equipment is to remain on site between October 15 and April 15, the Contractor shall include its method to prevent the treatment system equipment from freezing (heat tape, immersion heaters, etc.).

The Contractor shall detail its method to collect and contain water in its excavations. The Contractor shall also describe in detail its methods for limiting the quantity of water entering the excavation, including shoring, location of well points, limiting excavation size, preventing entry of surface water into the excavation, etc. The Contractor shall also include its assumptions and flow rate calculations related to the sizing of the system.

It is the Contractor's responsibility to design and properly size the system to accommodate the anticipated contaminants and dewatering rates based on its construction activities, POTW limitations, and permit requirements. The Contractor is alerted that construction activities may be limited based on permit restrictions or POTW limitations.

No claim for delay or request for additional time will be considered based upon the Contractor's failure to accommodate the review process.

b. Permits

Groundwater generated by construction activities within a GW AOEC shall be appropriately treated and discharged to the sanitary sewer system within Project limits. Management and discharge of contaminated groundwater shall be accomplished in accordance with a DEEP General Permit and POTW requirements. The Contractor shall be responsible for registering under the General Permit, any other necessary State or local permits, and all associated fees.

The DEEP General Permit for the Discharge of Groundwater Remediation Wastewater to Sanitary Sewer is available at www.ct.gov/deep. The Contractor shall submit the most

current permit registration form to the DEEP. A minimum lead-time of six (6) weeks can be expected to process and submit the registration, in addition to coordination time with the POTW. **No claim for delay or request for additional time will be considered based upon the Contractor's failure to accommodate the permitting process.** The Contractor shall not submit the permit registration to the DEEP prior to the Engineer's review of and comment on the treatment system.

The Contractor shall submit a copy of the DEEP permit certificate of registration to the Engineer prior to initiating any discharge.

All testing required by the general permit shall be conducted by a laboratory certified by the Connecticut Department of Public Health (DPH) for the method specified in the permit. The Contractor shall submit copies of the analytical results to the all parties specified in the permit terms and conditions and to the Engineer.

No claim for delay or request for additional time will be considered based upon the Contractor's failure to design a system to meet this performance specification. It is the Contractor's responsibility to properly size the treatment system and temporary containment tanks based on its anticipated flow rates from construction activities and to determine the level of treatment required to meet permit discharge limits.

c. Treatment System Operation

The Contractor shall ensure that all personnel involved in the groundwater treatment operations understand the terms of the General Permit. In the event of a conflict between the requirements of the Contract and the permit, the more stringent will apply.

The Contractor shall not commence work activities within any GW AOEC until such time as:

i. the temporary groundwater treatment system design is reviewed by the Engineer and comments are adequately addressed,

ii. the system is installed in accordance with the accepted design and is completely operational, and

iii. a copy of the Contractor's permit certificate of registration has been submitted to the Engineer.

The Contractor shall make any sanitary sewer tie-in modifications necessary to accommodate the treatment unit only after obtaining approval from the Engineer and the POTW.

The Contractor shall take all meter readings required by the permit and forward them to the appropriate parties.

The Contractor shall collect all samples related to permit compliance in the presence of the Engineer and shall submit copies of the analytical results and discharge monitoring reports to the appropriate agency(ies) as required by the General Permit terms and conditions. The Contractor shall provide informational copies of all analytical results and discharge monitoring reports to the Engineer as they are generated. In the event of an exceedance, the Contractor shall immediately comply with the "***Duty to Correct, Record, and Report Violations***" section of the General Permit. The Contractor shall provide the Engineer a copy of the required DEEP reporting and then document its review of the treatment system and all actions taken to correct the exceedance in writing to the Engineer within 48 hours of receiving laboratory data documenting the exceedance.

If the discharge must be suspended due to an effluent violation, the Contractor shall only restart the discharge after obtaining all necessary approvals from the DEEP/POTW and in full compliance with the General Permit and any amendments imposed thereto.

No claim for delay, request for additional time, or request for additional design/redesign costs for the system will be considered based upon the Contractor's failure to design/redesign a system to meet this performance specification.

2. On-Site Treatment System with Discharge to Surface Water

a. Contractor Submittals

At least 14 days prior to <u>any</u> submittal to the DEEP, the Contractor shall submit the treatment system design, which has been sealed by a Professional Engineer licensed in the State of Connecticut, to the Engineer for review and comment. Equipment shall prevent sediments and solids, as well as contaminants in excess of the permit allowable effluent concentrations, from discharging. This submittal shall include a schematic or diagram that shows all treatment system equipment, well point locations, pump set-ups in excavations, sedimentation control methods, system location, method of conveyance, flow rates, pipe sizes, valve locations, sampling ports, discharge locations, electrical power connection, etc.

The Contractor shall submit the manufacturer's data sheets, assembly details and performance data on all treatment equipment. If dewatering equipment is to remain on site between October 15 and April 15, the Contractor shall include its method to prevent the treatment system equipment from freezing (heat tape, immersion heaters, etc.).

The Contractor shall detail its method to collect and contain water in its excavations. The Contractor shall also describe in detail its methods for limiting the quantity of water entering the excavation, including shoring, location of well points, limiting excavation size, preventing entry of surface water into the excavation, etc. The Contractor shall also include its assumptions and flow rate calculations related to the sizing of the system.

It is the Contractor's responsibility to design and properly size the system to accommodate the anticipated contaminants and dewatering rates based on its construction activities and permit requirements. The Contractor is alerted that construction activities may be limited based on permit restrictions.

No claim for delay or request for additional time will be considered based upon the Contractor's failure to accommodate the review process.

b. Permits

Groundwater generated by construction activities within a GW AOEC shall be appropriately treated and discharged to surface water within Project limits. Management and discharge of contaminated groundwater shall be accomplished in accordance with a DEEP General Permit. The Contractor shall be responsible for registering under the General Permit and all associated fees.

The DEEP General Permit for the Discharge of Groundwater Remediation Wastewater Directly to Surface Water is available at www.ct.gov/deep. The Contractor shall submit the most current permit registration form to the DEEP. A minimum lead-time of six (6) weeks can be expected to process and submit the registration. **No claim for delay or request for additional time will be considered based upon the Contractor's failure to accommodate the permitting process.** The Contractor shall not submit the permit registration to the DEEP prior to review of and comment on the treatment system by the Engineer.

The Contractor shall submit a copy of the DEEP permit certificate of registration to the Engineer prior to initiating any discharge.

All testing required by the General Permit shall be conducted by a laboratory certified by the Connecticut Department of Public Health (DPH) for the method specified in the permit. The Contractor shall submit copies of the analytical results to the all parties specified in the permit terms and conditions and to the Engineer.

No claim for delay or request for additional time will be considered based upon the Contractor's failure to design a system to meet this performance specification. It is the Contractor's responsibility to properly size the treatment system and temporary containment tanks based on its anticipated flow rates from construction activities and to determine the level of treatment required to meet permit discharge limits.

For sites where the receiving water body does not qualify the site for registration under the DEEP General Permit for the Discharge of Groundwater Remediation Wastewater Directly to Surface Water and the discharge is anticipated to continue for 30 days or less, the Contractor may qualify for a DEEP Temporary Authorization (TA) to discharge to surface water. The Contractor will be bound to the terms and conditions of the TA the same as if it were a permit. If the Contractor applies for, and receives, a TA from the

DEEP, all other requirements of this specification will apply, except that where the specification refers to a permit, the TA will be substituted.

c. Treatment System Operation

The Contractor shall ensure that all personnel involved in the groundwater treatment operations understand the terms of the General Permit. In the event of a conflict between the requirements of this Item and the permit, the more stringent will apply.

The Contractor shall not commence work activities within any GW AOEC until such time as:

i. the temporary groundwater treatment system design is reviewed by the Engineer and comments are adequately addressed,

ii. the system is installed in accordance with the accepted design and is completely operational, and

iii. a copy of the Contractor's permit certificate of registration has been submitted to the Engineer.

The Contractor shall take all meter readings required by the permit and forward them to the appropriate parties.

The Contractor shall submit copies of the analytical results and discharge monitoring reports to the appropriate agency(ies) as required by the General Permit terms and conditions. The Contractor shall provide informational copies of all analytical results and discharge monitoring reports to the Engineer as they are generated. In the event of an exceedance, the Contractor shall immediately comply with the "***Duty to Correct, Record, and Report Violations***" section of the General Permit. The Contractor shall provide the Engineer a copy of the required DEEP reporting and then document its review of the treatment system and all actions taken to correct the exceedance in writing to the Engineer within 48 hours of receiving laboratory data documenting the exceedance.

If the discharge must be suspended due to an effluent violation, the Contractor shall only restart the discharge after obtaining all necessary approvals from the DEEP and in full compliance with the General Permit and any amendments imposed thereto.

No claim for delay, request for additional time, or request for additional design/redesign costs for the system will be considered based upon the Contractor's failure to design/redesign a system to meet this performance specification.

3. Off-Site Treatment and Disposal

At least 14 days prior to <u>any</u> work involving the dewatering of contaminated groundwater,

the Contractor shall submit for the Engineer's review and comment its proposed system to collect and contain the contaminated groundwater. This submittal shall include schematics of proposed pump set-ups in excavations; sedimentation control measures; probable location of temporary containment tanks; schematics of proposed method to transfer liquids from temporary containment tanks to transport vehicles; schematic of proposed method to off-load liquids at the off-site permitted treatment/disposal facility; documentation that transport vehicles hold a "Waste Transportation Permit" for contaminated liquids per CGS 22a-454; and the name of the disposal facility from the following list of Department-approved and DEEP-permitted treatment facilities for State-regulated liquid disposal:

Clean Harbors of CT
51 Broderick Rd.
Bristol, CT 06010
(860)224-7600

United Oil Recycling
Gracey Ave.
Meriden, CT 06450
(203)238-6754

Bridgeport United Recycling
50 Cross St.
Bridgeport, CT 06610
(203)238-6754

All testing required to meet facility acceptance parameters shall be conducted by the Contractor in the presence of the Engineer. The Contractor is hereby notified that laboratory turnaround time is expected to be fifteen (15) working days. The Contractor shall provide informational copies of the laboratory results to the Engineer. **No delay claim will be considered based upon the Contractor's failure to accommodate the laboratory turnaround time as identified above or to design its system with sufficient holding capacity to accommodate this requirement.**

The Contractor shall obtain and complete all paperwork necessary to arrange for disposal of the contaminated groundwater (such as disposal facility waste profile sheets). It is solely the Contractor's responsibility to coordinate the disposal with its selected facility. Upon receipt of the final approval from the facility, the Contractor shall arrange for the loading, transport and disposal in accordance with all Federal and State regulations. **No claim will be considered based on the failure of the Contractor's selected disposal facility(s) to meet the Contractor's production rate or for the Contractor's failure to select sufficient facilities to meet its production rate.**

The Contractor will be responsible for disposal of the entire shipment as the Hazardous Waste Generator for water that undergoes a change in waste classification due to the Contractor's work activities or processes (i.e. contaminated groundwater being classified characteristically hazardous for pH due to grouting operations).

Method of Measurement:

Within fourteen (14) calendar days after addressing the Engineer's comments on the proposed system(s) for Handling Contaminated Groundwater, the Contractor shall submit to the Engineer for approval a cost breakdown of its lump sum bid price. The submission must include substantiation showing that the cost breakdown submitted is reasonable based on the Contractor's lump sum bid. The cost breakdown shall be in accordance with the following payment schedule:

a. The cost to prepare the design for proposed system(s) for Handling Contaminated Groundwater, including preparation and submittal of all permit registration applications, in accordance with these specifications. Design costs shall not exceed 10% of the total cost of the item.

b. The procurement and installation cost for the proposed system(s) for Handling Contaminated Groundwater in accordance with these specifications. Procurement and installation costs shall not exceed 20% of the total cost of the item.

c. Equipment decontamination and demobilization and restoration of site. Decontamination and demobilization costs shall not exceed 10% of the total cost of the item.

d. The remaining costs for operation, monitoring, permit compliance, sampling and analysis, disposal costs, and maintenance of the proposed system(s), including cleaning of the temporary containment tanks of settled solids, transporting of solids to the WSA, and transportation of the contaminated dewatering wastewater to an off-site permitted treatment/disposal facility in accordance with these specifications shall be divided evenly throughout the duration of the project work involving contaminated groundwater at the discretion of the Engineer.

Increased costs directly related to the Contractor's operation (i.e. treatment or increased charges due to changes in pH or additional contaminants, treatment and disposal of excess water related to process or waste water, etc.) will not be paid under this item but will be considered a part of the Contractor's cost for the item under which the work is being performed.

Basis of Payment:

This work will be paid for at the Contract lump sum price for "Handling Contaminated Groundwater" which price shall include: all work and materials involved with handling contaminated groundwater from within GW AOECs and shall include all equipment, materials, tools and labor incidental to removal of the contaminated groundwater from the excavation; conveying contaminated groundwater from the dewatering point to the temporary containment tanks and groundwater treatment facility; treatment; conveying discharge of contaminated wastewater to a sanitary sewer, surface water or off-site disposal at a permitted treatment/disposal facility (including transportation); disposal or recycling of used treatment media (i.e. bag filters and spent carbon); permit applications; disposal and permit fees; POTW fees; electrical costs; sampling and documentation costs; laboratory costs; design and monitoring; mobilization, operation, and maintenance of the system; site work; all required equipment decontamination; transportation of solids to the WSA; and equipment demobilization.

Sedimentation control associated with work under this Item will be paid under the appropriate items of the Contract.

Pay Item	Pay Unit
Handling Contaminated Groundwater	LS

ITEM #0209001A – FORMATION OF SUBGRADE

Work under this item shall conform to the requirements of Section 2.09, amended as follows:

Construction Methods:

Add the following:

Construction activities and traffic on subgrades should be limited. Areas where subgrades deform shall be corrected as specified under ITEM #0202000A – Earth Excavation.

Method of Measurement:

Add the following:

The Formation of Subgrade will not be measured for separate payment.

Basis of Payment:

Payment for the Formation of Subgrade is incidental and the work, materials, tools, equipment and labor associated with it will be included as a portion of the cost of the associated items.

ITEM #0212001A – REUSE SUBBASE

Work under this item shall conform to the requirements of Section 2.12, amended as follows:

Construction Methods:

Add the following:

As specified elsewhere, existing Subbase will be excavated separately and stockpiled on site for reuse.

The Contractor will test this material and supplement it with offsite aggregate, blend it to achieve a usable material to be used to reduce the amount of Subbase that is imported to the site.

Method of Measurement:

Add the following:

Reused Subbase will be measured for payment by the cubic yards that is completed and accepted.

Basis of Payment:

The work will be paid for at the contract unit price per cubic yard for "Reused Subbase" complete in place which price shall include, excavation, site handling, the furnishing and blending of supplemental material, testing, placement, compaction and all materials, tools, equipment, labor and work incidental thereto.

Pay Item	Pay Unit
Reused Subbase	CY

ITEM #0219005A – SEDIMENTATION CONTROL COIR FIBER ROLL SYSTEM

ITEM #0219011A – SEDIMENT CONTROL SYSTEM AT CATCH BASIN

Description:

This work shall consist of furnishing, installing, cleaning, maintaining, replacing, and removing sedimentation control at catch basins at the locations and as shown on plans and as directed by the engineer.

Materials:

Sack shall be manufactured from a specially designed woven polypropylene geotextile sewn by a double needle machine, using a high strength nylon thread. Sack shall be manufactured by the following or an approved equal:

Siltsack®
SI Geosolutions:
www.sigeosolutions.com
(800)621-0444

Dandy Sack™
Dandy Products Inc.
P.O. Box 1980
Westerville, Ohio 43086
Phone: 800-591-2284
Fax: 740-881-2791
Email: dlc@dandyproducts.com
Website: www.dandyproducts.com

FLeXstorm Inlet Filters
Inlet & Pipe Protection
24137 W. 111th St - Unit A
Naperville, IL 60564
Telephone: (866) 287-8655
Fax: (630) 355-3477

The sack will be manufactured to fit the opening of the catch basin or drop inlet. Sack will have the following features: two dump straps attached at the bottom to facilitate the emptying of sack and

lifting loops as an integral part of the system to be used to lift sack from the basin. The sack shall have a restraint cord approximately halfway up the sack to keep the sides away from the catch basin walls, this cord is also a visual means of indicating when the sack should be emptied. Once the strap is covered with sediment, the sack should be emptied, cleaned and placed back into the basin.

Sedimentation control on-site shall consist of Coir Logs, or approved equal.

Construction Methods:

Installation, removal, and maintenance shall be per manufacturer instructions and recommendations.

Method of Measurement:

Sediment Control System at Catch Basin will be measured as each installed, maintained, accepted, and removed. There will be no separate measurement for maintenance or replacement associated with this item.

Sedimentation Control Coir Fiber Roll System will be measured by the number of linear feet that is completed and accepted.

Basis of Payment:

Sediment Control System at Catch Basin will be paid for at the contract unit price each complete in place and accepted, which price shall include all maintenance throughout construction, disposal of debris, materials, equipment, tools, and labor incidental thereto.

The work will be paid for at the contract unit price per linear foot for "Sedimentation Control Coir Fiber Roll System" complete in place which price shall include installation, maintenance, removal of sediment, site handling, and all materials, tools, equipment, labor and work incidental thereto.

Pay Item	Pay Unit
Sedimentation Control Coir Fiber Roll System	LF
Sedimentation Control at Catch Basin	EA

ITEM 0286000A DRAINAGE TRENCH EXCAVATION
ITEM 0286000.10A ROCK IN DRAINAGE TRENCH EXCAVATION

Work under this item shall conform to the requirements of Section 2.86, amended as follows:

Description:

Add the following:

Drainage trench excavation consists of the excavation necessary for the proper installation of drainage structures, pipes, pipe ends and any other incidental drainage items. The scope of work is increased to cover excavation and backfill for utilities, including but not limited to gas, water, lighting, sewer, communications, and electrical utilities.

In various portions of the project site, miscellaneous amounts of concrete are required to be removed.

Materials:

Add the following:

Materials shall conform to utility requirements.

Construction Methods:

Add the following:

The limits of drainage trench excavation and backfill will be adjusted to conform to the requirement of the utility to be constructed.

Bituminous concrete pavement will be excavated in a separate operation and will be disposed of properly. Bituminous concrete pavement is not allowed as backfill material unless it is processed and used in the construction of the roadway pavement section.

Bedding materials and warning tape shall be placed per each utility requirement.

Miscellaneous amounts of concrete items are required to be removed within the project area. Examples are, but not limited to, the removal of concrete light pole foundations, drainage structures, sanitary structures, utility structures and utility pads.

Method of Measurement:

Add the following:

Trench Excavation for the various utilities will not be measured directly for payment, but it wh.

The Cutting of Bituminous Concrete will not be measured for separate payment.

Rock In Drainage Trench Excavation will include the removal of miscellaneous concrete items to be removed such as concrete light pole foundations, drainage structures, sanitary structures, utility structures and utility pads and will be measured by the cubic yard and accepted.

Basis of Payment:

Add the following:

Utility excavation is considered incidental to the work and will be paid for as a portion of the work of the associated contract items.

Rock In Drainage Trench Excavation will be paid for at the contract unit price per cubic yard including excavation, breaking of materials, handling, and disposal of materials including labor equipment and incidentals.

Pay Item	Pay Unit
Rock in Drainage Trench Excavation	CY

ITEM #0304003A – REUSE PROCESSED AGGREGATE BASE

Work under this item shall conform to the requirements of Section 3.04, amended as follows:

Construction Methods:

Add the following:

As specified elsewhere, existing Processed Aggregate Base will be excavated separately and stockpiled on site for reuse.

The Contractor will test this material and supplement it with offsite aggregate, blend it to achieve a usable material to be used to reduce the amount of Processed Aggregate Base that is imported to the site.

Method of Measurement:

Add the following:

Reused Processed Aggregate Base will be measured for payment by the cubic yards that is completed and accepted.

Basis of Payment:

The work will be paid for at the contract unit price per cubic yard for "Reused Processed Aggregate Base" complete in place which price shall include, excavation, site handling, the furnishing and blending of supplemental material, testing, placement, compaction and all materials, tools, equipment, labor and work incidental thereto.

Pay Item	Pay Unit
Reused Processed Aggregate Base	CY

ITEM #0519004A – ELASTOMERIC MEMBRANE WATERPROOFING AND FLOODPROOFING

Description:

Work under this Item is intended to provide specific procedural requirements to be followed during the application of elastomeric waterproofing membranes, installation of floodproofing barriers, and installation of floodproof doors and windows as shown on the Plans. Work under this item shall include transporting and stockpiling materials; and covering, securing, and maintaining the stockpiled materials throughout the duration of the Project.

Materials:

Materials shall be as shown on the Project Plans.

1. Elastomeric Membrane Waterproofing: The contractor shall select a cold-fluid applied waterproofing membrane from one of the following:
   (a) Hydralastic 836 SL; as manufactured by W.R. Meadows, Inc.
   (b) 9235 Waterproofing Membrane; as manufactured by LATICRETE International. Inc.
   (c) Sikalastic-320 NS; as manufactured by Sika Corporation.
   (d) Or approved equal.

2. Flood Panels: The contractor shall select removable flood protection barriers for doors and windows from one of the following:
   (a) FRA Flood Panel; as manufactured by Floor Risk America.
   (b) FB22 Flood Protection Barrier; as manufactured by Presray Corporation.
   (c) Lift-Out Flood Barrier; as manufactured by Architecture Metals Ltd. Co.
   (d) Or approved equal.
3. Floodproof Doors: The Contractor shall select waterproof doors from one of the following manufacturers:
   (a) Architecture Metals Ltd. Co.
   (b) Or approved equal.
4. Floodproof Windows: The Contractor shall select waterproof windows from one of the following manufacturers:
   (a) Fenex, LLC.
   (b) Or approved equal.

Construction Methods:

A. General

1. References
   (a) ASTM C1250 – Standard Test Method for Nonvolatile Content of Cold Liquid-Applied Elastomeric Waterproofing Membranes.
   (b) ASTM C836 - Standard Specification for High Solids Content, Cold Liquid-Applied Elastomeric Waterproofing Membrane for Use with Separate Wearing Course.
   (c) ASTM D412 - Standard Test Methods for Vulcanized Rubber and Thermoplastic Elastomers – Tension.
   (d) ASTM D2240 - Standard Test Method for Rubber Property—Durometer Hardness.
   (e) ASTM D2369 - Standard Test Method for Volatile Content of Coatings
   (f) ASTM E96 - Standard Test Methods for Water Vapor Transmission of Materials.
   (g) ASTM B 209 - Standard Specification for Aluminum and Aluminum-Alloy Sheet and Plate.
   (h) ASTM B 211 - Standard Specification for Aluminum and Aluminum-Alloy Bar, Rod, and Wire.
   (i) Aluminum Association - Specification for Aluminum Structures, 7th Edition.
   (j) ASME Structural Welding Code Section IX.
   (k) FEMA Technical Bulletin 3-93 - Non-Residential Flood Proofing.
   (l) SEI/ASCE 7-16 - Minimum Design Loads for Buildings and Other Structures.
   (m) ASCE 24-14 AWS D1.2 - Structural Welding Code - Aluminum.
   (n) Aluminum Structures - A Guide to Their Specifications and Design.
   (o) U.S. Army Corps of Engineers, EP 1165-2-314 - Flood Proofing Regulations, 15 December 1995.

2. Submittals
   (a) Submit manufacturer's product data sheets on each product to be used, including:
      i. Preparation instructions and recommendations.
      ii. Storage and handling requirements and recommendations.
      iii. Installation instructions.
   (b) Shop Drawings: Provide shop drawings showing layout, profiles, and product components, including anchorage, hardware, and finishes. Include dimensional plans, applicable material specifications, elevations and sections detailing mounting and connections, and load diagrams.
3. Quality Assurance
   (a) Manufacturer Qualifications: Manufacturer must demonstrate previous successful experience in design and manufacture of similar flood-related closures. Upon request, provide supporting evidence including list of installations, descriptions, name, and method of contact.
   (b) Installer Qualifications: Use an experienced installer and adequate number of skilled personnel who are thoroughly trained and experienced in the application of fluid applied waterproofing membranes.
   (c) Obtain waterproofing materials from a single manufacturer regularly engaged in manufacturing the product.

(d) Obtain flood barriers from a single manufacturer regularly engaged in the manufacturing the product.
(e) Provide products which comply with all state and local regulations controlling use of volatile organic compounds (VOCs).

4. Mock-ups
   (a) Prior to installation of waterproofing membrane, apply waterproofing membrane to 10 $ft.^2$ of wall to demonstrate surface preparation, crack and joint treatment, corner treatment, thickness, and to demonstrate tie-ins with adjoining construction, and other termination conditions, as well as qualities of materials and execution.
   (b) Cooperate and coordinate with the owner's inspection and testing agency. Do not cover any installed waterproofing membrane unless it has been inspected, tested and approved.
5. Delivery, Storage and Handling
   (a) Deliver materials to site in manufacturer's original, unopened containers and packaging, with labels clearly identifying product name and manufacturer.
   (b) Store materials in a clean, dry area in accordance with manufacturer's instructions.
   (c) Store at temperatures between 40° - 70° F (4° - 21° C).
   (d) Protect materials during handling and application to prevent damage or contamination.
6. Job Conditions
   (a) Maintain environmental conditions (temperature, humidity, and ventilation) within limits recommended by manufacturer for optimum results. Do not install products under environmental conditions outside manufacturer's absolute limits.
   (b) Do not apply waterproofing membrane if rainfall is forecast or imminent within 12 hours.
   (c) Do not apply waterproofing membrane to any surfaces containing frost.

B. Execution

1. Examination
   (a) Examine surfaces to receive membrane and barrier hardware. Notify Engineer if surfaces are not acceptable.
   (b) Do not begin surface preparation or installation until unacceptable conditions have been corrected.
2. Surface Preparation
   (a) Elastomeric Waterproofing Membrane:
      i. Protect adjacent surfaces not designated to receive waterproofing.
      ii. Clean and prepare surfaces to receive waterproofing in accordance with manufacturer's instructions.
      iii. Do not apply waterproofing to surfaces unacceptable to manufacturer.
      iv. Clean concrete and masonry surfaces so they are free of all coatings, dirt, oil, paints and any other contaminants.
      v. Patch all holes and voids and smooth out any surface misalignments.
      vi. Priming.

(b) Removable Flood Barriers:
   i. Clean surfaces thoroughly prior to installation.
   ii. Prepare surfaces using the methods recommended by the manufacturer for achieving the best result for the substrate under the project conditions.

3. Installation
   (a) Elastomeric Waterproofing Membrane:
      i. Apply waterproofing membrane system in accordance with manufacturer's instructions.
      ii. Gently mix membrane prior to application.
      iii. Apply membrane by trowel, flat-blade squeegee, or roller at manufacturer's recommended rate.
      iv. If a two-coat application is required, apply second coat as soon as possible with no more than eight hours between coats.
      v. Frequently inspect surface area to ensure proper adhesion and consistent thickness is achieved.
      vi. Work material into any fluted rib forming indentations.
      vii. Provide minimum cured membrane thickness per manufacturer.
   (b) Removable Flood Barriers:
      i. Install in accordance with manufacturer's installations instructions, approved shop drawings, shipping, handling, and storage instructions, and product carton instructions for installation.
      ii. Panels shall be installed level, square, plumb, and rigid.
      iii. Sealants, water-stop, and grouting to be applied per product application directions and in accordance with manufacturer's instructions.
      iv. Tolerances: All dimensional requirements must be in accordance with manufacturer's installation instructions and shop drawings.
4. Final Review
   (a) The Engineer and Contractor shall jointly review completed work areas. Any irregularities or other criteria that do not meet the requirements of the Engineer shall be addressed at this time.

Method of Measurement:

The elastomeric waterproofing membrane shall be measured by the number of square yards of waterproofed surface completed and accepted. The removable flood barriers shall be measured by the square foot of area protected.

Basis of Payment:

This item will be paid for at the contract unit price per square yard of membrane waterproofing and square foot of flood proof barriers installed and accepted in place, which shall include surface preparation, furnishing, storing and applying the system, technical representative and Quality control testing, and any necessary repairs and remediation work as well as materials, equipment, tools, labor incidental to work.

Pay Item	Pay Unit
Elastomeric Waterproofing Membrane	SY
Removable Flood Barriers	SF

ITEM #0520036A - ASPHALTIC PLUG EXPANSION JOINT SYSTEM

Description: Work under this item shall consist of furnishing and installing an asphaltic plug expansion joint system (APJ) in conformance with ASTM D6297, as shown on the plans, and as specified herein.

Work under this item shall also consist of the removal and disposal of bituminous concrete, membrane waterproofing, existing joint components and sealing elements, cleaning and sealing median barrier joints, parapet joints, and sidewalk joints.

Work under this item excludes the removal of Portland cement concrete headers.

Materials: The APJ component materials shall conform to ASTM D6297 and the following:

Aggregate: The aggregate shall meet the following requirements:

a) Loss on abrasion: The material shall show a loss on abrasion of not more than 25% using AASHTO Method T96.
b) Soundness: The material shall not have a loss of more than 10% at the end of five cycles when tested with a magnesium sulfate solution for soundness using AASHTO Method T 104.
c) Gradation: The aggregate shall meet the requirements of Table A below:
d) Dust: aggregate shall not exceed 0.5% of dust passing the #200 sieve when tested in accordance with AASHTO T-11.

Table A

Square Mesh Sieves	**1" (25.0 mm)**	**¾" (19.0 mm)**	**½" (12.5 mm)**	**⅜" (9.5 mm)**	**No. 4 (4.75 mm)**
% passing	**100**	**90 - 100**	**20 - 55**	**0 - 15**	**0 - 5**

A sample of the aggregate shall be submitted to the Department with a Certified Test Report in accordance with Article 1.06.07 for each 20 tons of loose material or its equivalent number of bags delivered to the job site. The Certified Test report must include a gradation analysis resulting from a physical test performed on the actual material that accompanies the report.

Anti-Tacking Material: This material shall be a fine graded granular material with 100% passing the $^{3}/_{16}$" sieve and no more than 5% passing the #200 when tested in accordance with AASHTO T-27.
Backer Rod: All backer rods shall satisfy the requirements of ASTM D5249, Type 1.
Bridging Plate: The bridging plates shall be steel conforming to the requirements of ASTM A36 and be a minimum ¼" thick and 8" wide. For joint openings in excess of 3" the minimum plate dimensions shall be ⅜" thick by 12" wide. Individual sections of plate shall

not exceed 4' in length. Steel locating pins for securing the plates shall be size 16d minimum, hot-dip galvanized, and spaced no more than 12" apart.

Concrete Leveling Material: Shall be a cementitious-based material that conforms to ASTM C928 Standard Specification for Packaged, Dry, Rapid-Hardening Cementitious Materials for Concrete Repair, for R3 performance requirements in Table 1 and achieve the following:

a. Final set in 45 Minutes
b. 2500 psi compressive strength in 24 hours
c. 5000 psi compressive strength in 7 days

Parapet Sealant: The sealant used in parapet joint openings shall be a single component non-sag silicone sealant that conforms to the requirements of ASTM D5893.

Sidewalk Sealant: The sealant used in sidewalk joint openings shall be a rapid cure, self-leveling, cold applied, two-component silicone sealant. The silicone sealant shall conform to the requirements listed in Table B:

Table B

Properties - As Supplied	**Test Method**	**Requirement**
Extrusion Rate	ASTM C1183	200-600 grams/min
Leveling	ASTM C639	Self-Leveling
Specific Gravity	ASTM D792	1.20 to 1.40
Properties - Mixed	**Test Method**	**Requirement**
Tack Free Time	ASTM C679	60 min. max.
Joint Elongation – Adhesion to concrete	ASTM D5329 [1,2,3]	600% min
Joint Modulus @ 100% elongation	ASTM D5329 [1,2,3]	15 psi max
Cure Evaluation	ASTM D5893	Pass @ 5 hours

1. Specimens cured at 77 ± 3^0F and 50 ± 5% relative humidity for 7 days
2. Specimens size: ½"wide by ½"thick by 2" long
3. Tensile Adhesion test only

The date of manufacture shall be provided with each lot. No sealant shall be used beyond its maximum shelf-life date.

The two–part silicone sealants shown in Table C are known to have met the specified requirements:

Table C

Product	Supplier
Dow Corning 902RCS	Dow Corning Corporation 2200 W Salzburg Road Auburn, Michigan 48611
Wabo SiliconeSeal	BASF/Watson Bowman Acme Corporation 95 Pineview Drive Amherst, New York 14228

Other two-component silicone joint sealants expressly manufactured for use with concrete that conform to the aforementioned ASTM requirements will be considered for use provided they are submitted in advance for approval to the Engineer. Other joint sealants will be considered for use only if a complete product description is submitted, as well as documentation describing at least five installations of the product. These documented installations must demonstrate that the product has performed successfully for at least three years on similar bridge expansion joint applications.

A Materials Certificate and Certified Test Report for the asphaltic binder shall be submitted by the Contractor in accordance with the requirements of Article 1.06.07 certifying that the asphaltic binder satisfies the requirements of the most current version of ASTM D6297.

A Materials Certificate for all other components of the APJ, leveling material, backer rod and sealant used in sealing parapet and sidewalk joint openings, shall be submitted by the Contractor in accordance with the requirements of Article 1.06.07

Construction Methods: The APJ shall be installed at the locations shown on the plans and in stages in accordance with the traffic requirements in the special provisions "Maintenance and Protection of Traffic" and "Prosecution and Progress".

At least 30 days prior to start of the work, the Contractor shall submit to the Engineer for approval a detailed Quality Control Plan for the installation of the APJ. The submittal shall include:

a) A list of all manufactured materials and their properties to be incorporated in the joint system, including, but not limited to the asphaltic binder, anti-tack material, backer rod, sealant, leveling material, as well as the aggregate's source.
b) A detailed step by step installation procedure and a list of the specific equipment to be used for the installation. The Quality Control Plan must fully comply with the specifications and address all anticipated field conditions, including periods of inclement weather.

The APJ shall not be installed when bituminous concrete overlay or joint cutout is wet. The APJ shall only be installed when the bridge superstructure surface temperature is within the limits specified in Table D and when the ambient air temperature is within the range of 45^0F to 95^0F.

The bridge superstructure surface temperature range is determined using the thermal movement range provided on the contract plans for the proposed APJ deck installation location and the selected APJ product.

Commented [JLM1]: Reminder to Designer to insert thermal movement range on plans for each APJ location.

Table D

Installation Restrictions	
Designed Deck Joint Thermal Movement Range[2]	**Bridge Superstructure Surface Temperature[1]**
0" to 1"	45° F to 95° F
1-1/8"	45° F to 90° F
1-1/4"	45° F to 80° F
1-3/8"	45° F to 70° F
1-1/2"	45° F to 65° F

1. *The superstructure surface temperature shall be determined from the average of three or more surface temperature readings taken at different locations on the interior girder surfaces by the Contractor as directed by the Engineer. Temperature measurements of the superstructure shall be taken by the contractor with a calibrated hand held digital infrared laser-sighted thermometer on the surfaces of an interior steel girder, or interior concrete girder protected from direct sunlight. The infrared thermometer to be supplied by the Contractor for this purpose shall meet certification requirements of EN61326-1, EN61010-1, and EN60825-1 maintained by the European Committee for Electrotechnical Standardization (CENELEC). The thermometer shall have a minimum distance-to-spot ratio of 50:1 and shall have adjustable emissivity control. The thermometer shall have a minimum accuracy value of ±1% of reading or ±2°F, whichever is greater. The thermometer shall be used in strict accordance with the manufacturer's written directions. An additional infrared thermometer satisfying the same standards to be used in this application shall also be provided to the Engineer for quality assurance purposes.*
2. *Linear interpolation may be used to determine an allowable surface temperature range for thermal movement ranges in between values shown in the table, as approved by the Engineer.*

Prior to installing the APJ, the Contractor shall determine the exact location of the deck joint beneath the bituminous concrete overly.

The APJ shall be installed symmetrically about the deck joint opening to the dimensions shown on the plans or as directed by the Engineer; not to exceed 24 inches measured perpendicular to the deck joint. The proposed saw cut lines shall be marked on the bituminous concrete overlay by the Contractor and approved by the Engineer, prior to saw-cutting. The saw-cuts delineating the edges of the APJ shall extend full depth of the bituminous concrete overlay.

The existing bituminous concrete overlay, waterproofing membrane and/or existing expansion joint material, within the saw cut limits shall be removed and disposed of by the Contractor to create the joint cutout.

Concrete surfaces that will support the bridging plates shall be smooth and form a plane along and across the deck joint. Rough or damaged concrete surfaces shall be repaired with a leveling compound meeting the requirements of this specification. Deteriorated concrete areas within the joint limits shall be repaired as directed by the Engineer: such repairs, when deemed necessary by the Engineer, shall be compensated for under the applicable concrete deck repair items in the Contract. The existing and repaired concrete surfaces shall provide continuous uniform support for the bridging plate and prevent the plate from rocking and deflecting.

Prior to the installation of the backer rod, all horizontal and vertical surfaces of the joint cutout shall be abrasive blast cleaned using an oil-free, compressed air supply. The entire cutout shall then be cleared of all loose blast media, dust, debris and moisture using an oil-free, hot air lance capable of producing an air stream at 3,000ºF with a velocity of 3,000 feet per second.

A single backer rod, with a diameter at least 25% greater than the existing joint opening at the time of installation, shall be installed at an inch below the bridging plate in the existing deck joint opening between the concrete edges.

Asphaltic binder shall be heated to a temperature within the manufacturer's recommended application temperature range which shall be provided in the Quality Control Plan. During application, the temperature of the binder shall be maintained within this range. In no case shall the temperature of the binder go below 350º F nor exceed the manufacturer's recommended maximum heating temperature.

Asphaltic binder shall then be poured into the joint opening until it completely fills the gap above the backer rod. A thin layer of binder shall next be applied to the all horizontal and vertical surfaces of the joint cutout.

Bridging plates shall be abrasive blast-cleaned on-site prior to installation and then placed over the deck joint opening in the joint cutout. The plates shall be centered over the joint opening and secured with locating pins along its centerline. The plates shall be placed end to end, without overlap, such that the gap between plates does not exceed ¼". The plates shall extend to the gutter line and be cut to match the joint's skew angle, where concrete support exists on both sides of the joint. Within APJ installation limits, where concrete support does not exist at both sides of the joint opening (such as where a bridge deck end abuts a bituminous concrete roadway shoulder), bridging plates shall not be installed. Installed bridging plates shall not rock or deflect

in any way. After installation of bridging plates, a thin layer of asphaltic binder shall be applied to all exposed surfaces of the plates.

The remainder of the joint cutout shall then be filled with a mixture of hot asphaltic binder and aggregate prepared in accordance with the submitted Quality Control Plan and the following requirements:

- The aggregate shall be heated in a vented, rotating drum mixer by the use of a hot-compressed air lance to a temperature of between 370° F. to 380° F. This drum mixer shall be dedicated solely for the heating and, if necessary, supplemental cleaning of the aggregate. Venting of the gas and loose dust particles shall be accomplished through ¼" drilled holes spaced no more than 3" on center in any direction along the entire outside surface of the drum
- Once the aggregate has been heated, it shall then be transferred to a secondary drum mixer where it shall be fully coated with asphaltic binder. A minimum of two gallons of binder per 100lbs of stone is required.
- The temperature of the aggregate and binder shall be monitored by the contractor with a calibrated digital infrared thermometer.
- The coated aggregate shall be loosely placed in the joint cutout in lifts not to exceed 2 inches.
- Each lift shall be leveled, compacted and then flooded with hot asphaltic binder to the level of the aggregate to fill all voids in the coated aggregate layer. The surface of each lift shall be flooded until only the tips of the aggregate protrude out of the surface.
- The final lift shall be placed such that no stones shall project above the level of the adjacent overlay surface following compaction of the coated aggregate.
- Following installation of the final lift, sufficient time and material shall be provided to allow all voids in the mixture to fill. This step may be repeated as needed.
- The joint shall then be top-dressed by heating the entire area with a hot-compressed air lance and applying binder. The final joint surface must be smooth with no protruding stones and be absent of voids.
- Once top-dressed, the joint shall have an anti-tack material spread evenly over the entire surface to prevent tracking.

The Contractor shall be responsible for removing all binder material that leaks through the joint and is deposited on any bridge component, including underside of decks, headers, beams, diaphragms, bearings, abutments and piers.

Traffic shall not be permitted over the joint until it has cooled to 130º F when measured with a digital infrared thermometer. Use of water to cool the completed joint is permitted.

<u>Sidewalk, parapet, and/or curb joint openings</u>

Before placement of any sealing materials in parapets, curbs, or sidewalks, the joints shall be thoroughly cleaned of all scale, loose concrete, dirt, dust, or other foreign matter by abrasive blast cleaning. Residual dust and moisture shall then be removed by blasting with oil free

compressed air using a hot air lance. Projections of concrete into the joint space shall also be removed. The backer rod shall be installed in the joint as shown on the plans. The joint shall be clean and dry before the joint sealant is applied. Under no circumstances is the binder material to be used as a substitute for the joint sealant.

Whenever abrasive blast cleaning is performed under this specification, the Contractor shall take adequate measures to ensure that the abrasive blast cleaning will not cause damage to adjacent traffic or other facilities.

The joint sealant shall be prepared and placed in accordance with the manufacturer's instructions and with the equipment prescribed by the manufacturer. Extreme care shall be taken to ensure that the sealant is placed in accordance with the manufacturer's recommended thickness requirements.

The joint sealant shall be tooled, if required, in accordance with the manufacturer's instructions.

Primer, if required, shall be supplied by the sealant manufacturer and applied in accordance with the manufacturer's instructions.

When the sealing operations are completed, the joints shall be effectively sealed against infiltration of water. Any sealant which does not effectively seal against water shall be removed and replaced at the Contractor's expense.

Any installed joint that exhibits evidence of failure, as determined by the Engineer, such as debonding, cracking, rutting, or shoving of the APJ mixture shall be removed and replaced full-width and full–depth to a length determined by the Engineer at no additional cost to the State.

Method of Measurement: This work will be measured for payment by the number of cubic feet of "Asphaltic Plug Expansion Joint System" installed and accepted within approved horizontal limits. No additional measurement will be made for furnishing and installing backer rod and joint sealant in the parapets, concrete medians, curbs and/or sidewalks.

Basis of Payment: This work will be paid for at the contract unit price per cubic foot for "Asphaltic Plug Expansion Joint System," complete in place, which price shall include the saw-cutting, removal and disposal of bituminous concrete, membrane waterproofing, existing joint components and sealing elements, the furnishing and placement of the leveling compound, cleaning of the joint surfaces, furnishing and installing bridging plates, the furnishing and installing of the asphaltic plug joint mixture, the cost of furnishing and installing joint sealant in the parapets, concrete medians, curbs and sidewalks, and all other materials, equipment including, but not limited to, portable lighting, tools, and labor incidental thereto. No additional payment shall be made for the 12" wide bridging plates that are required for deck joint openings with widths in excess of 3".

If directed by the Engineer, additional deck repairs will be addressed and paid for under the applicable concrete deck repair items in the Contract.

Commented [JLM2]: This special provision is OWNED by the Office of Construction. Contact Gregg S. Shaffer, 860 594-3477 or email at gregg.shaffer@ct.gov

ITEM #0601651A - RETAINING WALL (SITE NO. 1)
ITEM #0601652A - RETAINING WALL (SITE NO. 2)
ITEM #0601653A - RETAINING WALL (SITE NO. 3)

Description:

This item shall consist of designing, furnishing and constructing a retaining wall and all incidentals necessary to complete the work in the location, at the grades, and to the dimensions and details shown on the plans.

Retaining Wall Selection: The retaining wall type shall be selected from the list of retaining walls shown on the plans. The plans may also detail a cast-in-place reinforced concrete retaining wall. The Engineer will reject any proposed retaining wall type that is not listed on the plans.

The plans will list all proprietary retaining walls that are appropriate for each Site. This list does not warrant that the walls can be designed to meet either the dimensional, structural, or geotechnical constraints at each Site.

Refer to the Department's Qualified Product List (QPL) for the current approved proprietary retaining wall and for the suppliers' contact information; no other proprietary retaining walls will be allowed. The Department's QPL can be found at:

https://portal.ct.gov/-/media/DOT/documents/dresearch/conndotqplpdf.pdf?la=en

NOTE: SEE THE PLANS FOR THE SPECIFIC RETAINING WALL TYPES THAT ARE ACCEPTABLE FOR EACH SITE.

On-Site Representative: A qualified and experienced representative from the retaining wall supplier shall be at the Site at the initiation of wall construction to assist the Contractor and the Engineer at no additional cost to the Department. The wall supplier's on-Site representative shall have, in the past three years, successfully installed at least three retaining walls of the height, length and complexity similar to the retaining wall(s) shown on the plans and meeting the tolerances specified herein. If there is more than one wall or more than one wall type on the plans, then this criterion will apply to the construction of the initial wall only, or the initial wall of each wall type only. After the initial wall construction, the representative shall also be available on an as needed basis, as requested by the Engineer.

Pre-Installation Meeting: A Pre-Installation meeting shall be scheduled prior to commencement of construction activity. Attendees shall include the Engineer, the Contractor (including wall construction crew chiefs), the wall Subcontractor, wall manufacturer and wall designer, or their respective representatives. No wall construction activity shall be performed until the Contractor's final submittal has been approved by the Engineer and the Pre-Installation meeting has been held.

Design: Design computations are not required for the cast-in-place wall option detailed on the plans except the Contractor shall submit working drawings and design computations, in accordance with Article 1.05.02, for any temporary earth retaining systems (TERS) necessary (included in the lump sum item).. **The submissions for proprietary retaining walls shall be treated as working drawings in accordance with Section 1.05.02.**

1. Design Computations: If the Contractor chooses one of the proprietary wall options, he is fully responsible for the design, detailing and additional specifications required. The actual designer of the retaining wall shall be a qualified Professional Engineer licensed in the State of Connecticut. The designer must have designed at least three proprietary walls within the last three years.
2. Designer's Liability Insurance: The Designer of the proprietary retaining wall shall secure and maintain, at no direct cost to the Department, a Professional Liability Insurance Policy for errors and omissions in accordance with Articles 1.03.07 and 1.05.02.
3. Preliminary Submissions for Proprietary Retaining Walls: Prior to the start of fabrication or construction, the Contractor shall submit working drawings to the Engineer, which shall include, at a minimum the following:
   a. Detailed Plans:
      1) Full plan view of the wall drawn to scale. The plan view must reflect the horizontal alignment and offset from the horizontal control line to the face of the wall. Beginning and ending stations, all utilities, signs, lights, etc. that affect the construction along with all property lines and easement lines adjacent to the retaining wall shall be shown.
      2) Full elevation view of the wall drawn to scale. Elevation views shall indicate the elevation at the top and bottom of walls, horizontal and vertical break points, and the location of finished grade.
      3) Typical cross sections drawn to scale including all appurtenances. Detailed cross sections shall be provided at significant reinforcement transitions such as wall ends.
      4) Details of all wall components and their connections such as the length, size and type of reinforcement and where any changes occur; modular component and facing details including reinforcing steel and reinforcement connections; joint material including geotextile filter location and horizontal joint compression material, etc.
      5) Drainage details for embankment backfill including attachment to outlets shown on plans.
      6) Details of any roadway drainage pipe projecting through the wall, or any attachments to the wall. Details of the treatment of drainage swales or ditches shown on the plans.
      7) Design parameters used along with references from latest edition of American Association of State Highway and Transportation Officials (AASHTO) LRFD Bridge Design Specifications, including the latest interims, as specified in the plans.
      8) Material designations for all materials to be used.

9) Detailed construction methods including a Quality Control plan. Construction Quality Control plans shall include monitoring and testing frequencies (e.g., for setting batter and maintaining horizontal and vertical control), construction restraints, and specific requirements for construction around obstructions.
10) Details of parapet attachments where required, along with any lighting and/or signing requirements.
11) Details of architectural treatment where required.
12) Details of TERS where required.
13) Details of retaining wall treatment where the wall abuts other structures.
14) Treatment at underground utilities where required.

b. Design Computations:
   1) Computations shall clearly refer to the applicable AASHTO LRFD Bridge Design Specifications provisions as stated on the plans.
   2) Documentation of computer programs including all design parameters.
   3) The design shall meet the criteria listed below.

c. Construction Specifications:
   1) Construction methods shall be specific to the proprietary retaining wall chosen. These specifications shall include construction limitations including vertical clearance, right-of-way limits, etc.
   2) Submittal requirements for materials such as certification, quality, and acceptance/rejection criteria.
   3) Details on connection of modular units and connection of reinforcements including assurance of uniform stress transfer.
   4) Any other requirements.

4. Final Submissions for Proprietary Retaining Walls: Once a proprietary retaining wall design has been reviewed and accepted by the Department, the Contractor shall submit working drawings in accordance with Article 1.05.02.

   The working drawing submission shall be made no later than 14 days after acceptance by the Department. No work shall be performed on the retaining wall until the Department has accepted the working drawings.

   Acceptance of the working drawings shall not relieve the Contractor of responsibility for the successful completion of the work.

   The Contractor's designer of the proprietary retaining wall shall review any shop drawings prepared for the fabrication of the wall. One set of full size approved shop drawings shall be submitted per Article 1.05.02-2. Working Drawings.

5. General Design Requirements:
   a. All designs for proprietary walls and TERS (if required) shall meet the requirements of the latest edition of the AASHTO LRFD Bridge Design Specifications including the latest Interims published except as noted otherwise herein.
   b. The wall design shall follow the dimensions of the wall envelope shown on the plans.

      For all proprietary walls, the top of the leveling pad or reinforced concrete toe footing shall be located at or below the bottom of the footing elevation shown on the plans. If no

footing elevation is shown, the minimum wall embedment shall be 4 feet as measured to the top of the leveling pad or toe footing.

If steps at the bottom of the wall are required, they shall be kept at or below the footing elevation shown on the plans. Steps in addition to those shown on the plans will be permitted at no additional cost to the Department.

c. The wall shall be designed to be within all property lines and easement lines shown on the plans. If additional work areas are necessary for the construction of the proprietary retaining wall, the Contractor shall be responsible for obtaining the rights from the affected property owners. Copies of these rights shall be forwarded to the Department.
d. The top of the wall shall be at the top of the wall elevations shown on the plans. Where coping or barrier is utilized, the wall face panel shall extend up into the coping or barrier a minimum of 2 inches. The top of the face panels may be level or sloped to meet the top of the wall line noted.
e. Cast-in-place concrete will not be an acceptable replacement for areas noted by the wall envelope, except for minor grouting of pipe penetrations and leveling required for coping or traffic barrier.
f. The wall shall be designed for a minimum live load surcharge as specified in AASHTO LRFD Bridge Design Specifications Article 3.11.6. If there are specific live load surcharges acting on the wall, they shall also be accounted for. The minimum equivalent fluid pressure used to design the wall shall meet the requirements of AASHTO LRFD Article 3.11.5.
g. If stated on the plans, the retaining wall shall be designed for seismic forces according to the AASHTO LRFD Bridge Design Specifications.
h. If the wall is detailed with a concrete parapet, the top two courses of prefabricated modular walls units shall be designed to support a transverse railing load of 10 kips. The 10 kip load may be distributed over the length of the parapet section between joints, but not exceeding 20 feet. Computations that verify the stability of the top two courses of the modular units shall be submitted to the Engineer.
   The detailing and reinforcement in the parapet section above the gutterline or finished grade, including any light standard attachments, shall be as shown on the plans.
i. The wall shall be designed to accommodate all roadway drainage and drainage structures as shown on the plans.
j. At a minimum, an underdrain system shall be provided for leading subsurface and surface water away from the backfill and outside limits of the wall.
k. Hydrostatic Forces: Unless specified otherwise, when a design high water surface is shown on the plans at the face of the wall, the design stresses calculated from that elevation to the bottom of wall must include a 3-foot minimum differential head of saturated backfill. In addition, the buoyant weight of saturated soil shall be used in the calculation of pullout resistance.
l. The Maximum Design Foundation Pressures for both Strength and Service Limit States shall be as shown on the plans. The foundation pressure stated assumes a uniform pressure distribution. If additional soils information is required by the Contractor's designer, it must be obtained by the Contractor at no additional cost to the Department.

m. Backfill: The friction angle of the Pervious Structure Backfill used in the reinforced fill zone for the internal stability design of the wall shall be assumed to be 34 degrees unless shown otherwise on the plans. The friction angle of the in-situ soils shall be assumed to be a maximum of 30 degrees unless otherwise shown on the plans.

n. Parapet and Moment Slab Design:

1) General requirements for parapet and moment slab design:

Where an unyielding barrier (e.g. concrete barrier, parapet) on top of the retaining wall is warranted, the parapet and moment slab shall be designed in accordance with the latest AASHTO LRFD Bridge Design Specifications, including the latest interim specifications and errata, amended as follows:

The parapet shall be designed and constructed of precast or cast-in-place concrete. The moment slab shall be designed and constructed of cast-in-place reinforced concrete.

Above the finished grade, the parapet dimensions, concrete and reinforcement shall meet the Department's retaining wall parapet details. Below the finished grade, the parapet shall be designed to resist the forces specified in the following table:

MASH Test Level	Parapet Height (in.)	Design Transverse Impact Force F_t (kips)	Height of Design Impact Force (in.)
TL-3	≥ 29	71	19
TL-4	36	68	25
	> 36	80	30
TL-5	42	160	35
	> 42	262	43

The structural design of the moment slab and its connection to the parapet shall resist, at a minimum, a transverse load equal to 100% of F_t. The length of the structural connection between parapet and moment slab assumed to resist transverse force F_t shall be the distance between parapet joints but not greater than 30 feet in any case.

The minimum thickness of the moment slab shall be 1foot.

The design of the moment slab for overturning and sliding shall be based on a lateral force of 10 kips static load. The length of the moment slab assumed to resist sliding and overturning may exceed parapet joint spacing providing the slab is monolithic beneath the joints, but shall be no greater than 30 feet in any case. The moments shall be summed about the front face of the wall facing. All resistance factors shall be taken as 1.0. The internal angle of friction for the soil shall be assumed to be 34 degrees unless otherwise shown on the plans.

Minimum concrete cover for reinforcing steel shall be 2 inches for top bars and 3 inches for bottom bars.

2) Precast Concrete Parapet Alternative:
   - Precast parapet sections shall be no less than 10 feet in length.
   - Parapets shall include details for shear transfer between adjacent units by either concrete shear keys or steel dowels as follows:
     - Shear keys, when used, shall be monolithically cast in each parapet section or joint location. Shear keys shall be located vertically within the top 32 inches of the parapet and shall be a minimum of 24 inches in length with a tapered width between 3 and 4 inches, and a minimum interlock depth of 2 inches.
     - Steel dowels, when used, shall be, at a minimum, 14 inches long and have a 1-inch diameter at each parapet interface. The steel dowels shall be smooth and, at a minimum, number 3 bars. Steel dowels shall be located in each parapet joint and spaced approximately 1 foot apart vertically. Steel dowels shall be positioned to project equally into each adjoining parapet section and shall be detailed to avoid impeding shrinkage and thermal movements. Bond breakers may be used with steel dowels for that purpose. Alternatively, pockets may be cast to receive steel dowels in adjacent parapet units. Pocket widths shall not exceed steel dowel diameters by more than 1/2 inch.
   - Moment slabs for precast concrete parapets shall be structurally continuous throughout the overall retaining wall length. Construction joints are permitted in moment slabs.

3) Cast-in-Place Parapet Alternative:

   The minimum distance between parapet joints shall be 20 feet. Expansion and contraction joints shall be placed in accordance with Section 11.6 of the AASHTO LRFD Bridge Design specifications. Expansion and contraction joints shall be located a minimum of 10 feet from the nearest edge of a catch basin. Expansion and contraction joints shall be located a minimum of 6 feet from the centerline of light standard anchorages and junction boxes. Preformed expansion joint filler, ½ inch thick, shall be installed at the expansion joints in the parapet.

   Parapets shall include details for shear transfer between sections by way of concrete shear keys or steel dowels as follows:
   - Shear keys, when used, shall be monolithically cast in each parapet section or joint location. Shear keys shall be located vertically within the top 32 inches of the parapet and shall be a minimum of 24 inches in length with a tapered width between 3 and 4 inches, and a minimum interlock depth of 2 inches.
   - Steel dowels, when used, shall be a minimum of 14 inches long and have a 1-inch diameter at each parapet interface. The steel dowels shall be smooth and, at a minimum, number 3 bars. Steel dowels shall be located in each parapet joint and spaced approximately 1 foot apart vertically. Steel dowels shall be positioned to project equally into each adjoining parapet sections and shall be detailed to avoid impeding shrinkage and thermal movements. A bond breaker shall be used with steel dowels for that purpose.

Moment slabs for cast-in-place parapets shall extend to the outside face of the retaining wall as shown on the plans. Moment slabs for cast-in-place parapets shall be structurally continuous throughout the overall wall length, except for the purpose of crack control at parapet contraction and expansion joint locations, longitudinal reinforcing within 2 feet of the retaining wall face shall be discontinuous. All remaining longitudinal reinforcement in moment slabs at parapet expansion and contraction joints shall be continuous. A vertical 1 inch deep chamfer on the exposed face of the moment slab shall be provided in locations directly under parapet expansion and contraction joints. Construction joints are permitted in cast-in place moment slabs.

6. Design Requirements for Mechanically Stabilized Earth Walls: The design shall consider the internal stability of the wall mass as outlined below. The global stability of the structure, including slope stability, bearing capacity at strength and service limit states, and total and differential settlement, is the responsibility of the Department.
   a. Soil Reinforcement: The soil reinforcement shall be the same length from the bottom to the top of each wall section. The reinforcement length defining the width of the entire reinforced soil mass may vary with wall height along the length of wall. The minimum length of the soil reinforcement shall be 70% of the wall height, H, or 8 feet, whichever is greater.

      The soil reinforcement shall be of sufficient length to provide for the required factored resistances for sliding, overturning and pullout loads (as designated in AASHTO LRFD Bridge Design Specifications) and shall be the minimum lengths required for external stability as recommended by the Department. Calculations of stresses, pullout factored loads and resistances shall be in accordance with the most recent AASHTO LRFD Bridge Design Specifications.
   b. Calculations for factored loads and resisting forces shall be based on assumed conditions at the end of the design life. The design life shall be 75 years unless otherwise indicated on the plans. The design of soil reinforcements shall account for section loss as outlined in the AASHTO LRFD Bridge Design Specifications. All soil reinforcement shall be hot-dip galvanized in accordance with ASTM A123.

7. Design Requirements for Prefabricated Modular Walls: The general design of the retaining wall shall be according to the AASHTO LRFD Bridge Design Specifications. The Contractor shall be responsible for internal stability aspects of wall design. The design shall consider the stability at each level of modules. The global stability of the structure, including slope stability, bearing capacity at strength and service limit states, and total and differential settlement, is the responsibility of the Department.
   a. Infill: The maximum assumed unit weight of infill material used for overturning stability analysis shall be 100 pounds per cubic foot. If Doublewal modules are to be filled with crushed stone, the maximum assumed unit weight of the infill shall be 80 pounds per cubic foot.
   b. Resistance Factors: The resistance factors used in the design computations shall be as specified in the AASHTO LRFD Bridge Design Specifications amended as follows: The unfactored resistance for pullout of the concrete stem for T-Walls shall be 1.5 times or

greater than the unfactored loads. Shear keys shall not be included in these computations. Only resisting forces developed beyond the theoretical failure plane may be used in these computations.

Materials:

1. Cast-in Place Concrete Walls: The materials furnished and used in the work shall be those prescribed in the Standard Specifications for Roads, Bridges, Facilities and Incidental Construction, including supplemental specifications and applicable special provisions as specified in the Contract.

2. Prefabricated Modular and Mechanically Stabilized Earth Walls: Materials shall meet the following requirements, and those not listed below shall be as prescribed within the Standard Specifications for Roads, Bridges, Facilities and Incidental Construction, including supplemental specifications and applicable special provisions.
   a. Concrete: The concrete shall meet the requirements of Section M.03 and as follows:

      Concrete for all precast components shall be air-entrained, Portland cement, fine and coarse aggregates, admixtures and water. An air-entraining Portland cement or an approved air-entraining admixture shall be used. The entrained-air content shall be from 4% to 7%. The concrete shall attain a minimum 28-day strength (f'_c) of 4,500 pounds per square inch. The mix design shall be furnished to the Engineer.

      Concrete for footings or unreinforced leveling pads shall meet the requirements of Class PCC03340 Concrete. Class PCC04460 Concrete shall be used for cast-in-place concrete copings.

      Concrete Finish: Unless otherwise indicated on the plans or elsewhere in the specifications, the concrete surface for the exposed face shall have a steel form finish. All non-exposed surfaces shall have an unformed finish which shall be free of open pockets of aggregate and surface distortions in excess of 1/4 inch.

      Special Surface Treatment: If a special surface finish is proposed, before proceeding with production, a model face panel shall be provided by the fabricator for the Engineer's approval, to establish a guide and standard for the type of finish on the exposed face. This panel shall be stored at the fabricator's plant to be used for comparison purposes during production. Formed surfaces other than the exposed face shall not require a special finish.

      Acceptance Criteria for Precast Components: Acceptance of precast components shall be based on the concrete strength, the soil reinforcement connection devices and the panel or module dimensions meeting the manufacturer's allowable tolerances. Any chipping, cracks, honeycomb or other defects shall be within acceptable standards for precast concrete or repaired as determined by the Engineer.

It is recognized that certain cracks and surface defects are not detrimental to the structural integrity of the precast components if properly repaired. The Engineer shall determine the need for, and proper method of, such repair and all repairs shall be approved by the Engineer prior to acceptance for use in wall construction.

Marking: The date of manufacture, production lot number, and piece-mark shall be clearly marked on the non-exposed side of each element.

b. Reinforcing Steel: Reinforcing steel shall meet the requirements of ASTM A615, Grade 60.
c. Attachment Devices for Prefabricated Modular Walls: All structural connectors shall be hot-dip galvanized according to the requirements of ASTM A123 (AASHTO M111). The minimum thickness of the galvanizing shall be based on the service life requirements in the AASHTO LRFD Bridge Design Specifications.
d. Soil Reinforcing and Attachment Devices for MSE Walls:
   1) Soil Reinforcement: Steel strip reinforcement bands shall be hot rolled to the required shape and dimensions. The steel shall meet the requirements of ASTM A572 Grade 65 unless otherwise specified.

      Welded wire fabric reinforcement shall be shop fabricated from cold-drawn wire of the sizes and spacing shown on the plans. All wire and welded wire fabric shall meet the requirements of ASTM A1064 or AASHTO M 336M/M 336. Welded wire fabric shall be galvanized in accordance with the requirements of AASHTO M 111 or ASTM A123.

      All soil reinforcement and structural connectors shall be hot-dip galvanized in accordance with ASTM A123 (AASHTO M111). The minimum thickness of the galvanizing shall be based on the service life requirements as previously stated.
   2) Connection Hardware: Connection hardware shall be in accordance with the details on the plans, and shall meet the requirements in the special provisions or plans. All fasteners shall be galvanized in accordance with ASTM A153 or AASHTO M 232 and shall meet the requirements of AASHTO M 164. The minimum thickness of the galvanizing shall be based on the service life requirements as previously stated.
e. Joint Materials: All horizontal and vertical joints between panels shall be covered by a Geotextile (Separation-High Survivability) meeting the requirements of Subarticle M.08.01-19. The minimum width and lap shall be 12 inches. Details of installation including connection of the geotextile to coping shall be provided.
f. Backfill: Backfill shall be Pervious Structure Backfill meeting the requirements of Articles M.02.05 and M.02.06. In addition, the backfill for Mechanically Stabilized Earth Walls shall meet all of the following electrochemical requirements:

PROPERTY	REQUIREMENT	TEST METHODS
Resistivity at 100% saturation	Minimum 3000 ohm-cm	ASTM G57-06 (2012) AASHTO T288
pH	Acceptable Range 5.0 – 10.0	ASTM G51-95 (2012) AASHTO T289
Chlorides	Maximum 100 ppm	ASTM D512 or D4327 AASHTO T291
Sulfates	Maximum 200 ppm	ASTM D516 or D4327 AASHTO T290
Organic Content	Maximum 1%	ASTM D2974 or AASHTO T267

g. Smooth Steel dowels: Steel dowels used in parapet joints shall meet the requirements of ASTM A36 and shall be galvanized in accordance with ASTM A153.

Construction Methods:

1. Cast-in-Place Concrete Walls: All construction methods for cast-in-place retaining walls shall be in accordance with the detailed requirements prescribed for the construction of the appropriate component items as specified in the Standard Specifications for Roads, Bridges, Facilities and Incidental Construction.

2. Prefabricated Modular Walls: All construction methods for prefabricated modular retaining walls shall be in accordance with the detailed requirements prescribed for the construction of the appropriate component items as specified in the Standard Specifications for Roads, Bridges, Facilities and Incidental Construction, with the following additional requirements:
   a. Inspection and Rejection: The quality of materials, process of manufacture, and finished units shall be subject to inspection by the Engineer prior to shipment.
      Modular units which have imperfect molding, honeycomb, open texture concrete, or broken corners shall be repaired to the satisfaction of the Engineer or shall be rejected. Insufficient compressive strength shall also be cause for rejection.
      Modular units with special surface treatments shall be rejected if there are variations in the exposed face that deviate from the approved model as to color or texture in accordance with precast concrete industry standards.
   b. Installation: The modular units shall be installed in accordance with manufacturer's recommendations. Special care shall be taken in setting the bottom course of units to true line and grade.
      The vertical joint opening on the front face of the wall shall not exceed 3/4 inch. Vertical tolerances and horizontal alignment of the wall shall not exceed 3/4 inch in 8 feet from the vertical. The plumbness of the wall from top to bottom shall not exceed 1/2 inch per 8 feet, or 1 inch total, whichever is less, measured from the face line shown on the plans. A strip of geotextile shall be installed at all vertical joints.
      Assembly of the various components shall not place any undue strain or stress on any of the members that constitute the completed structure.

c. Backfilling:
   1) Doublewal:
      - Infill for modular units shall be placed one course at a time, in lifts not exceeding two feet in thickness. The dry density of each lift of Pervious Structure Backfill, after compaction, shall meet the requirements of Article 2.16.03.
      - Placement of the Pervious Structure Backfill behind the wall shall follow erection of successive courses of modular units. The difference in backfill elevation between the interior and exterior of the wall shall not exceed 6 feet.
      - The units may be backfilled with crushed stone if the design of the retaining wall was based on a density of 80 pounds per cubic foot.
      - All Pervious Structure Backfill placed outside of the modular units shall be placed in accordance with the requirements of Article 2.16.03.
      - At the end of each work shift, the Contractor shall slope the last level of backfill away from the wall facing to direct runoff away from the wall face. The Contractor shall control and divert runoff at the ends of the wall to prevent erosion. In addition, the Contractor shall prevent surface runoff from entering the wall construction site.
   2) T-Wall:
      - Backfill placement in the interior of the wall unit and behind the wall shall follow erection of each course of prefabricated wall modules. Backfill shall be placed in such a manner as to avoid any damage or disturbance to the wall materials or misalignment of the modules. Any wall materials which become damaged or disturbed during backfill placement shall be removed and replaced at the Contractor's expense or corrected, as directed by the Engineer. Any backfill material placed within the wall envelope which does not meet the specified material requirements shall be corrected or removed and replaced at the Contractor's expense.
      - Each lift (10 inches thick maximum) shall be placed and compacted with a mechanical or vibratory compactor to meet the density requirements in Article 2.16.03. The Contractor may reduce the lift thickness to obtain the specified density.
      - Compaction within 3 feet of the module face shall be achieved by at least three passes of a lightweight mechanical tamper, roller or vibratory system. The specified lift thickness shall be adjusted as warranted by the type of compaction equipment actually used. Care shall be exercised in the compaction process to avoid misalignment or damage to the module. Heavy compaction equipment shall not be used to compact backfill within 3 feet of the wall face. Sheepfoot rollers and puddling for compaction will not be allowed. The Contractor shall take soil density tests, in accordance with Article 2.16.03, to ensure compliance with specified compaction requirements and if a compaction test fails, no additional backfill shall be placed over the area until the lift is recompacted and a passing test is achieved.
      - The moisture content of the backfill material prior to and during compaction shall be uniform throughout each layer. Backfill material shall have a

placement moisture content less than or equal to the optimum moisture content. Backfill material with a placement moisture content in excess of the optimum moisture content shall be removed and reworked until the moisture content is uniform and acceptable throughout the entire lift. The optimum moisture content shall be determined in accordance with Article 2.16.03.

- At the end of each day's operation, the Contractor shall slope the last level of backfill away from the retaining wall facing to direct runoff away from the retaining wall face. The Contractor shall control and divert runoff at the ends of the wall to prevent erosion or washout of the wall section does not occur. In addition, the Contractor shall prevent surface runoff from entering the wall construction site.

3. Mechanically Stabilized Earth Walls: All construction methods for items not listed below shall be in accordance with the detailed requirements prescribed for the construction of the appropriate items as specified in the Standard Specifications for Roads, Bridges, and Incidental Construction.
   a. Foundation Preparation: The foundation for the structure shall be graded level for a width equal to or exceeding the length of the soil reinforcements, or as shown on the plans. Prior to wall construction the foundation, if not rock, shall be compacted. Any foundation soils found to be unsuitable shall be removed and replaced with Granular Fill or as shown on the plans.

      At each panel foundation level, an un-reinforced concrete leveling pad shall be constructed as shown on the plans. Granular Fill leveling pads are not allowed. The concrete leveling pad shall be cast to the design elevations as shown on the plans and shall meet the pertinent requirements of Section 6.01.
   b. Wall Erection: Panels shall be placed in successive horizontal lifts in the sequence shown on the plans as backfill material is placed behind the panels, and the panels shall be maintained in a vertical position. The vertical joint opening on the front face of the wall panels shall not exceed 3/4 inch. Vertical tolerances and horizontal alignment of the wall face shall not exceed 3/4 inch in 8 feet from the vertical. The plumbness of the wall from top to bottom shall not exceed 1/2 inch per 8 feet, or 1 inch total, whichever is less, measured from the face line shown on the plans.

      The allowable offset in any panel joint shall be 3/4 inch. The final horizontal and vertical joint gaps between adjacent facing panel units shall be within 1/8 inch and 1/4 inch, respectively, of the design final joint opening per the approved working drawings.
   c. Placement of Reinforcements: Soil reinforcements shall be placed normal to the face of the wall, unless otherwise shown on the plans. All reinforcement bands shall be structurally connected to the wall face per the manufacturer's detail.

      The reinforcement shall bear uniformly on compacted soil from the wall connection to the free end of the reinforcing elements. The reinforcement placement elevation shall be at, or at most 2 inches above, the connection elevation. Bending of reinforcement in the horizontal plane that results in a permanent deformation in their alignment is not allowed. Gradual bending in the vertical direction that does not result in permanent deformations is allowable.

Connection of reinforcements to piles or bending of reinforcements around piles is not allowed. A structural connection (yoke) from the retaining wall panel to the reinforcement shall be used to avoid cutting or excessive skewing of reinforcements due to pile or utility conflicts.

Where overlapping of reinforcement may occur, such as at corners, reinforcing connections to panels shall be adjusted to maintain at least 3 inches of vertical separation between overlapping reinforcement.

d. Backfill Placement: Backfill placement shall follow erection of each course of panels. Backfill shall be placed to avoid any damage, disturbance to the wall materials or misalignment of the facing panels, or damage to soil reinforcement. The Contractor shall place backfill to the level of connection and shall ensure that no voids exist directly underneath the reinforcing elements.

Any wall materials which become damaged or disturbed during backfill placement shall be either removed and replaced at the Contractor's expense or corrected, as directed by the Engineer. The Contractor may submit alternative corrective procedures to the Engineer for consideration. Proposed alternative corrective procedures shall have the concurrence of the MSE wall supplier and designer, in writing, prior to submission to the Engineer for consideration. All corrective procedure development and actions shall be at the Contractor’s expense.

Any backfill material placed within the reinforced soil mass which does not meet the specified requirements shall be corrected or removed and replaced at the Contractor's expense.

The fill shall be spread by moving the machinery parallel to or away from the wall facing so that the steel reinforcement remains normal to the face of the wall. Construction equipment shall not operate directly on the steel reinforcement. A minimum fill thickness of 3 inches over steel reinforcement shall be required prior to operation of vehicles. Sudden braking and sharp turning shall be avoided.

Backfill shall be installed in accordance with Article 2.16.03, except as follows:

If 30% or more of the backfill material is greater than 3/4 inch in size, the acceptance criterion for control of compaction shall be either a minimum of 70% of the dry density of the material as determined by a test method performed by the Contractor, or by following a specification provided by the wall supplier. The wall supplier’s specification shall be based on a test compaction section, which defines the type of equipment, lift thickness, number of passes of the specified equipment, and placement moisture content.

Backfill shall be compacted using a static-weighted or vibratory roller. Sheepfoot or grid type rollers shall not be used for compacting material within the limits of the soil reinforcement. The Contractor shall take soil density tests, in accordance with Article 2.16.03, to ensure compliance with specified compaction requirements.

The maximum lift thickness after compaction shall not exceed 10 inches, regardless of the vertical spacing between layers of soil reinforcements. The Contractor shall decrease this lift thickness, if necessary, to obtain the specified density. Prior to placement of the soil reinforcements, the backfill elevation at the face shall be level with the connection after compaction. From a point approximately 3 feet behind the back face of the panels to the free end of the soil reinforcements, the backfill shall be 2 inches above the attachment device elevation unless otherwise shown on the plans.

Compaction within 3 feet of the back face of the panels shall be achieved by at least three passes of a lightweight mechanical tamper, roller or vibratory system. The minimum number of passes and rolling pattern shall be determined, prior to construction of the wall, by constructing a test pad section. The minimum dimensions of the test pad shall be 5 feet wide, 15 feet long, and 3 feet final depth. The specified lift thickness shall be adjusted as warranted by the type of compaction equipment actually used. Care shall be exercised in the compaction process to avoid misalignment of the panels or damage to the attachment devices. Heavy compaction equipment shall not be used to compact backfill within 3 feet of the wall face.

The moisture content of the backfill material prior to and during compaction shall be uniform throughout each layer. Backfill material shall have a placement moisture content less than or equal to the optimum moisture content. Backfill material with a placement moisture content in excess of the optimum moisture content shall be removed and reworked until the moisture content is uniform and acceptable throughout the entire lift. The optimum moisture content shall be determined in accordance with Article 2.16.03 (with oversize correction, as outlined in Note 7).

At the end of each day's operation, the Contractor shall slope the last level of backfill away from the wall facing to direct runoff away from the wall face. The Contractor shall control and divert runoff at the ends of the wall to prevent erosion. In addition, the Contractor shall prevent surface runoff from entering the wall construction site.

Method of Measurement:

This work, being paid for on a lump sum basis, will not be measured for payment. Prior to the commencement of work on this item, the Contractor shall submit a proposed schedule of values for review and approval by the Engineer.

Basis of Payment:

This work will be paid for at the Contract lump sum price for "Retaining Wall (Site No. X)," complete in place, which price shall include all work shown within the pay limits on the plans for the retaining wall including the following:

1. Design and construction of the proprietary retaining wall.
2. Excavation required for the construction of the retaining wall.
3. Design and construction of temporary earth retaining systems to retain the existing facilities during construction.
4. The furnishing, placing and compacting of Pervious Structure Backfill within the payment lines.
5. The furnishing and placing of backfill drainage systems for the wall.
6. The furnishing and placing of rigid metal conduit, junction boxes, light standard anchorages, and other electrical appurtenances located within the wall proper.
7. Services of the On-Site Representative.
8. Any other work and materials shown on the plans for the retaining wall.

The price shall also include all materials, equipment, tools and labor incidental thereto.

Bedrock or boulders in excess of 1 cubic yard encountered in the excavation, will be paid for under the item "Structure Excavation - Rock."

Pay Item	Pay Unit
Retaining Wall (Site No. 1)	LS
Retaining Wall (Site No. 2)	LS
Retaining Wall (Site No. 3)	LS

ITEM #0707009A - MEMBRANE WATERPROOFING (COLD LIQUID ELASTOMERIC)

Description:

Work under this item consists of furnishing and installing a seamless elastomeric waterproofing membrane system applied to a concrete or steel surface as shown on the plans, in accordance with this specification and as directed by the Engineer. Work shall also include conditioning of the surface to be coated and all quality-control testing noted herein.

The completed membrane system shall be comprised of a primer coat, two layers of the membrane coating (minimum total thickness of 80 mil and maximum total thickness not to exceed 120 mil), an additional 40 mil membrane layer with aggregate broadcast into the material while still wet, reinforcing material at deck panel joints and two applications of asphalt emulsion (tack coat) at a rate of 0.05-0.07 gal/s.y. each, allowing the first application to break prior to applying the second.

Materials:

The Contractor shall select a waterproofing membrane system from the Department's current Qualified Product List (QPL) for Spray-Applied Membrane Waterproofing System. All materials incorporated in the works shall meet the Manufacturer's specification for the chosen system. The Engineer will reject any system that is not on the QPL.

Reinforcing material shall be as recommended by the manufacturer.

Materials Certificate: The Contractor shall submit to the Engineer a Materials Certificate for the primer, membrane and aggregate in accordance with the requirements of Article 1.06.07.

Construction Methods:

At least 30 days prior to installation of the membrane system, the Contractor shall submit to the Engineer a Site-specific Installation Plan that includes the manufacturer's recommended procedure for preparing the deck surface, pre-treatment or preparing at cracks and gaps, treatment at curbs, vertical surfaces or discontinuities, applying the primer and membrane, placing of aggregated coat and all Quality Control (QC Plan) testing operations to be performed during the membrane system's installation. Procedures shall also include recommended repairs of system non-compliant issues identified during application. The system shall be applied to the prepared area(s) as defined or shown in the plans, strictly in accordance with the Installation Plan.

A technical representative, in the direct employ of the manufacturer, shall be present on-Site immediately prior to and during application of the membrane. The representative shall inspect and approve the surface prior to priming, and provide guidance on the handling, mixing and addition of components and observe application of the primer and membrane. The technical representative shall perform all required QC testing and remain on the Project site until the membrane has fully cured.

All QC testing, including verbal direction or observations at the time of installation, shall be recorded and submitted to the Engineer for inclusion in the Project records. The QC testing data shall be received by the Department's project personnel prior to any paving over the finished membrane, or within 24 hours following completion of any staged portion of the work.

1. Applicator Approval: The Contractor's membrane Applicator shall be fully trained and licensed by the membrane manufacturer and shall have successfully completed at least three spray membrane projects in the past five years. The Contractor shall furnish references from those projects, including names of contact persons and the names, addresses and phone numbers of persons who supervised the projects. This information shall be submitted to the Engineer prior to the submittal of the Installation Plan. The Engineer shall have sole authority to determine the adequacy and compliance of the submitted information. Inadequate proof of ability to perform the work will be grounds to reject proposed applicators.

2. Job Conditions:

   (a) Environmental Requirements: Air and substrate temperatures shall be between 32°F and 104°F and the substrate shall be above the dew point. Outside of this range, the Manufacturer shall be consulted.

   The Applicator shall be provided with adequate disposal facilities for nonhazardous waste generated during installation of the membrane system. The applicator shall follow safety instructions regarding respirators and safety equipment.

   (b) Safety Requirements: All open flames and spark producing equipment shall be removed from the work area prior to commencement of application.

   "No Smoking" signs shall be visibly posted at the Site during application of the membrane waterproofing.

   Personnel not involved in membrane application shall be kept out of the work area.

3. Delivery, Storage and Handling:

   (a) Packaging and Shipping: All components of the membrane system shall be delivered to the Site in the Manufacturer's packaging, clearly identified with the product type and batch number.

(b) Storage and Protection: The Applicator shall be provided with a storage area for all components. The area shall be cool, dry and out of direct sunlight and shall be in accordance with the Manufacturer's recommendations and relevant health and safety regulations.

Copies of Material Safety Data Sheets (MSDS) for all components shall be kept on Site for review by the Engineer or other personnel.

(c) Shelf Life - Membrane Components: Packaging of all membrane components shall include a shelf life date sealed by the Manufacturer. No membrane components whose shelf life has expired shall be used.

4. Surface Preparation:

(a) Protection: The Applicator shall be responsible for the protection of equipment and adjacent areas from over spray or other contamination. Parapets and bridge joints shall be masked prior to application of the materials.

(b) Surface Preparation: Sharp peaks and discontinuities shall be ground smooth. Any peak greater than ¼ inch above the surface profile of the prepared substrate shall be ground to the surrounding elevation. Any valley or minor surface deterioration of ½ inch or greater shall also be repaired. The extent and location of surface patches require the approval of the Engineer before the membrane system is applied.

Surfaces shall be free of oil, grease, curing compounds, loose particles, moss, algae, growth, laitance, friable matter, dirt, bituminous products, and previous waterproofing materials. If required, degreasing shall be done by detergent washing in accordance with ASTM D4258.

The surface shall be abrasively cleaned, in accordance with ASTM D4259, to provide a sound substrate free from laitance.

Voids, honeycombed areas, and blow holes on vertical surfaces shall be repaired as indicated in the Installation Plan.

All steel components to receive membrane waterproofing shall be blast cleaned in accordance with SSPC SP6 and shall be coated with the membrane waterproofing system within the same work shift.

5. Inspection and Testing: Prior to priming of the surface, the Engineer, Applicator and Manufacturer's technical representative shall inspect and approve the prepared substrate.

(a) Random tests for deck moisture content shall be conducted on the substrate by the Contractor at the Site using a "Sovereign Portable Electronic Moisture Master Meter,"

a "Tramex CMEXpertII Concrete Moisture Meter" or approved equal. The minimum frequency shall be one test per 1000 s.f. but not less than three tests per shift for each contiguous section worked on during that shift. Additional tests may be required if atmospheric conditions change and retesting of the substrate moisture content is warranted.

The membrane system shall not be installed on substrate with a moisture content greater than 6%, or at a moisture content above the amount recommended by the system's Manufacturer, whichever is less.

(b) Random tests for adequate tensile bond strength shall be conducted by the Contractor on the substrate using an adhesion tester in accordance with the requirements of ASTM D4541. The minimum frequency shall be one test per 5,000 s.f. but not less than three adhesion tests per shift for each contiguous section worked on during that shift. The locations of the pull tests shall be at least a distance from each other equal to or greater than 1/3 of the width or length (whichever is greater) of the area being worked in that section. The location of the pull tests shall be located in accordance with ASTM D3665 or a statistically-based procedure of stratified random sampling approved by the Engineer.

Adequate surface preparation will be indicated by tensile bond strengths of primer to the substrate greater than or equal to 150 psi or failure in a concrete surface and greater than or equal to 300 psi for steel surfaces.

If the tensile bond strength is lower than the minimum specified, the Engineer may request additional substrate preparation. Any primer not adequately applied shall be removed and new primer applied at the Contractor's expense, as directed by Engineer.

(c) Grouted joints, materials that the membrane cannot bond to, and cracks or discontinuities that cannot be bridged over by the membrane material shall be covered by a reinforcing material recommended by the membrane system's Manufacturer prior to application of membrane layers as approved or directed by the Engineer.

6. Application:

(a) The System shall be applied in the following distinct steps as follows:
   1) Substrate preparation
   2) Priming
   3) Reinforcing material application over grouted joints, cracks, etc.
   4) Membrane application (minimum 2 layers)
   5) Membrane with aggregate

(b) Immediately prior to the application of any components of the System, the surface shall be adequately dry (see Section 5(a) of this specification) and any remaining dust

or loose particles shall be removed using clean, dry, oil-free compressed air or industrial vacuum.

(c) Where the area to be treated is bound by a vertical surface (e.g. curb or wall), the membrane system shall be continued up the vertical, if shown on the plans or directed by the Engineer.

(d) The handling, mixing and addition of components shall be performed in a safe manner to achieve the desired results, in accordance with the Manufacturer's recommendations or as approved or directed by the Engineer.

(e) A neat finish with well defined boundaries and straight edges shall be provided by the Applicator.

(f) Primer: The primer shall consist of one coat with an overall coverage rate of 125 to 175 s.f./gal unless otherwise recommended in the Manufacturer's written instructions.

All components shall be measured and mixed in accordance with the Manufacturer's recommendations.

The primer shall be spray applied using a single component spray system approved for use by the Manufacturer. If required by Site conditions and allowed by the manufacturer brush, squeegee or roller application will be allowed.

The primer shall be allowed to cure tack-free for a minimum of 30 minutes or as required by the Manufacturer's instructions, whichever time is greater, prior to application of the first lift of waterproofing membrane.

Porous concrete (brick) may require a second coat of primer should the first coat be absorbed.

(g) Membrane and Reinforcing Material: Application of the membrane on the primed surface shall not commence until the primer is cured as described in Section 6(f) of this specification and the adhesion pull tests are completed in accordance with Section 5(b) of this specification.

The waterproofing membrane shall consist of two coats for a total dry film thickness of a minimum 80 mils but not to exceed 120 mils. Adjacent coats shall be of a contrasting color to aid in Quality Assurance and inspection. Any reinforcing material shall be applied immediately before the first coat of membrane in accordance with the Manufacturer's recommendations.

The membrane shall be comprised of Components A and B and a hardener powder which is to be added to Component B in accordance with the Manufacturer's recommendations.

The substrate shall be coated in a methodical manner.

Thickness checks: For each layer, checks for wet film thickness using a gauge pin or standard comb-type thickness gauge shall be carried out once every 100 s.f. Where rapid set time of the membrane does not allow for wet film thickness checks, ultrasonic testing (steel surfaces only), calibrated point-penetrating (destructive) testing, in-situ sampling (cutout of small sections for measuring thicknesses), or other methods approved by the Engineer shall be employed for determination of dry film thickness. The measured thickness of each and every individual test of the membrane shall be greater than or equal to the required thickness.

Bond Strength: Random tests for adequate tensile bond strength shall be conducted on the membrane in accordance with the requirements of ASTM D4541. The minimum test frequency shall be one test per 5,000 s.f. but no less than three adhesion tests per bridge. Adequate adhesion will be indicated by tensile bond strengths of the membrane to the substrate of greater than or equal to 150 psi or failure in a concrete surface, and greater than or equal to 300 psi for steel surfaces.

Repair the membrane system following destructive testing and correct any deficiencies in the membrane system or substrate noted during QC testing in accordance with the Manufacturer's recommendations to the satisfaction of the Engineer at no additional cost to the State.

(h) Repairs: If an area is left untreated or the membrane becomes damaged, a patch repair shall be carried out to restore the integrity of the system. The damaged areas shall be cut back to sound materials and wiped with solvent (e.g. acetone) up to a width of at least four inches on the periphery, removing any contaminants unless otherwise recommended by the Manufacturer. The substrate shall be primed as necessary, followed by the membrane layers. A continuous layer shall be obtained over the substrate with a four-inch overlap onto existing membrane.

Where the membrane is to be joined to existing cured material, the new application shall overlap the existing by at least four inches. Cleaning and surface preparation on areas to be lapped shall be as recommended in the Manufacturer's written instructions.

(i) Aggregated Finish:
1) Apply an additional 40 mil thick layer of the membrane material immediately followed by an aggregate coating, before the membrane cures, at a rate to fully cover the coated area to a point where no membrane material is visible. The membrane and aggregate shall be fully integrated after the aggregate has been applied and the membrane cured.
2) Localized areas not fully coated shall be touched-up with additional membrane and aggregate as needed.

3) Using motorized mechanical sweepers or a vacuum sweeper apparatus, remove all loose and excess aggregate from the surface to the satisfaction of the Engineer and dispose of properly after application prior to allowing traffic onto finished surface or application of tack coat. Any areas not fully coated after sweeping shall be touched up with additional membrane and aggregate as needed.

7. Final Review: The Engineer and the Applicator shall jointly review the area(s) over which the completed system has been installed. Any irregularities or other criteria that do not meet the requirements of the Engineer shall be addressed at this time.

Method of Measurement:

This item shall be measured by the number of square yards of waterproofed surface completed and accepted.

Basis of Payment:

This item will be paid for at the Contract unit price per square yard of "Membrane Waterproofing (Cold Liquid Elastomeric)," complete and accepted in place, which price shall include all surface preparation, furnishing, storing and applying the system, technical representative and Quality Control testing, and any necessary repairs and remediation work as well as all materials, equipment, tools, labor incidental to this work.

Pay Item	Pay Unit
Membrane Waterproofing (Cold Liquid Elastomeric)	SY

ITEM #0819002A - PENETRATING SEALER PROTECTIVE COMPOUND

Description:

Work under this item shall consist of cleaning concrete surfaces of dirt, dust, and debris, and furnishing and applying a clear, penetrating sealer to concrete surfaces where shown on the plans, to provide a barrier against the intrusion of moisture and chlorides. This work also includes furnishing, installing, and removing platforms, scaffolding, ladders, and other means of access as well as shields, as required, to protect adjacent areas and traffic from overspray.

Materials:

The penetrating sealer shall conform to Article M.03.09. A Materials Certificate shall be submitted for the penetrating sealer in accordance with Article 1.06.07. A product not listed on the Qualified Products List (QPL) may be considered for approval. A Certified Test Report shall be submitted in accordance with Article 1.06.07 indicating that the product being considered conforms to the Test Requirements listed on the QPL.

Construction Methods:

Submittals: The Contractor shall submit to the Engineer Safety Data Sheets (SDS), Technical Data Sheets and product literature for the approved sealer. The literature shall include written instructions how to apply the sealer to vertical and horizontal surfaces, and where required, overhead surfaces. Application rate and number of applications of sealer shall be addressed.

The Contractor shall submit to the Engineer, in accordance with Article 1.05.02, written procedures for cleaning the concrete surfaces prior to sealer application The submittal shall include proposed equipment and materials and shall address how adjacent traffic and other areas shall be protected from dust, debris and overspray during the cleaning and application processes. Where the sealer is to be applied to parapets before pavement is placed, the submittal shall address protection of the deck and curb to which membrane waterproofing will be applied. Should the membrane already be present, the submittal shall address shielding of the membrane. It shall also indicate how vegetation and regulated areas shall be protected from overspray. The submittal shall address the conditions under which work may proceed, including wind speed, temperature and precipitation. It shall also include procedures to be followed to protect the work should unfavorable weather conditions occur before the product has been absorbed.

The Contractor shall inspect the surfaces to be sealed to identify surface cleaning needs before submitting the procedures. The Contractor shall identify concrete surfaces that:

- Need repair
- Require special attention or cleaning procedures
- Have been previously treated with coatings or curing compounds that would hinder penetration of the sealer into the concrete
- Will be new or newly repaired

Written procedures shall include observations listed above. Application of penetrating sealer to new concrete shall be addressed in the application procedures. Forms for surfaces of new concrete to receive penetrating sealer shall not be treated using form release oil, which can inhibit or prevent penetration of the sealer into the concrete.

Surface Preparation: Concrete surfaces to which penetrating sealer will be applied shall be clean and free of grease, oil, and other surface contaminants, including biological growth. Dry surfaces may be cleaned by sweeping with brushes or brooms, and blowing clean with oil-free, compressed air. The Contractor shall take care not to damage the concrete surface finish during cleaning operations. Care shall be taken so that cleaning methods do not damage joint sealant or other components of the structure that are to remain.

Application: Application of the sealer may begin only after the Engineer evaluates the concrete surfaces and determines that conditions for installation comply with the accepted written application procedures.

The sealer shall be applied in accordance with the accepted application procedures at the rate specified by the manufacturer. The Contractor shall monitor and record the number of square feet of concrete surface sealed and the number of gallons of sealer applied over that surface area to verify that the required application rate is being met. A minimum of three applications of sealer shall be assumed to be needed. After the first application of the sealer, curing time shall be recorded and submitted to the Engineer. Additional applications of sealer shall be applied as specified in the application instructions, provided adequate time between applications and appropriate curing of the sealer have occurred. For each application, the Contractor shall record the area and number of gallons of sealer applied as well as the curing time for that application. The Contractor may be directed to apply sealer in up to three separate applications if concrete surfaces readily absorb the previous application.

If the Contractor is directed to apply more than three applications of sealer, the additional applications will be compensated as extra work. Should salts, oil or other visually undesirable materials be evacuated from the concrete by the penetrating sealer and remain on the surface after sufficient rain events have occurred, the Engineer may order surface cleaning of the concrete as extra work.

The Engineer shall be provided access to inspect the concrete surface during application and after the sealer has had adequate time to cure.

Method of Measurement:

This work will be measured for payment by the actual number of square yards of concrete, sealed and accepted, within the designated limits. The area will be measured once, regardless of the number of applications required.

Basis of Payment:

This work will be paid for at the Contract unit price per square yard for "Penetrating Sealer Protective Compound," complete, which price shall include all equipment tools, labor and materials, incidental thereto, including the preparation of the concrete surfaces and proper disposal of debris.

The following are not included in the cost of this item and will be considered Extra Work:

- Special cleaning procedures ordered by the Engineer to properly prepare the concrete surface for application of the penetrating sealer (such as removal of tightly adherent biological growth, graffiti, or other difficult-to-remove surface contaminants)
- Additional applications of sealer as noted in the Construction Methods
- Cleaning of evacuated material from sealed surfaces as ordered by the Engineer.

Pay Item	Pay Unit
Penetrating Sealer Protective Compound	SY

ITEM #0901003A – STEEL BOLLARD
ITEM #0901006A – REMOVE AND RESET BOLLARD

Description: Work under this item shall consist of furnishing and installing concrete filled bollards of the type specified at the locations called for on the plans, of as directed by the Engineer. Also included is the removal and resetting of existing concrete bollards.

Description: Material for this work shall conform to the products indicated on the Drawings and the following:

Steel bollard: Schedule 80 steel pipe, six inches in outside diameter, conforming to the requirements of ASTM-A53.

Concrete: M.03, type as indicated.

Polyethylene Cover: Yellow in cover, manufactured by Ideal Shield, LLC, Detroit, MI or approved equal.

Construction Methods:
Install bollards in the locations shown on the Drawings. The steel pipe shall be securely set plumb in concrete. The permanent bollard shall be filled with concrete. The Contractor shall prepare exposed surfaces of steel pipe for painting by thoroughly removing dirt, mud, or other foreign matter.

The steel post shall have an exposed length of 4'. The post shall be installed to a depth of 4', set in a concrete footing of at least 30" in diameter and 42" deep. The post shall be filled with concrete. The top shall be rounded to a convex surface. No sharp edges, burrs, threads or other defects shall be exposed.

Existing bollards, regardless of material type, shall be removed by excavating around them and carefully removing and temporarily storing them until they are able to be reset.

Ater installation disturbed areas are to be restored as shown on the plans or directed by the Engineer.

Method of Measurement:
This work will be measured by the actual number of bollard of the type specified, completed and accepted.

Basis of Payment:
This work will be paid for at the unit price for each "Steel Bollard", complete in place, which shall include excavation, construction of a bollard, polyethylene cover, site handling, concrete bedding, backfill, surface restoration, disposal of surplus or unsuitable materials and additional materials, tools and labor incidental thereto.

This work will be paid for at the unit price for each “Remove and Reset Bollard”, complete in place, which shall include excavation, removal of existing concrete bollard, temporary storage, site handling, removal of existing concrete from bollard, resetting of bollard, placement of concrete bedding, backfill, surface restoration, disposal of surplus or unsuitable materials and additional material, tools and labor incidental thereto.

Pay Item	Pay Unit
Steel Bollard	EA.
Remove and Reset Bollard	EA.

ITEM #0904051A – 3-TUBE CURB MOUNTED BRIDGE RAIL

Description:

Work under this item shall consist of fabricating, galvanizing, transporting and erecting a curb mounted bridge rail comprised of anchorages, concrete inserts, plates, posts, rails, fasteners and epoxy grout in accordance with the plans.

Materials:

Structural steel shapes and plates shall meet the requirements of ASTM A572, Grade 50. Hollow structural sections shall meet the requirements ASTM A500, Grade C or ASTM A501, Grade B. Certified Test Reports and Materials Certificates shall be submitted in accordance with Article 1.06.07. The Certified Test Reports shall address that the steel meets the requirements of Article 1.06.01, Buy America.

All exposed steel shapes, plates and hollow structural sections shall have a controlled content of silicon within the range 0.0% to 0.4% or 0.15% to 0.25%. Before galvanizing, mill test certificates verifying silicon content shall be submitted to the Engineer and the galvanizer.

All steel shapes, plates and hollow structural sections shall be hot-dip galvanized in accordance with ASTM A123.

All high strength bolts shall meet the requirements of ASTM F3125, Grade A325, Type 1. Nuts shall conform to ASTM A563, Grade DH. Circular, flat, hardened steel washers shall meet the requirements of ASTM F436. The bolts, nuts and washers shall be galvanized in accordance with ASTM F2329 or ASTM B695, Class 55.

The anchor rods shall be fully threaded rods in accordance with ASTM F1554, Grade 105. The nuts shall meet the requirements of ASTM A563, Grade DH. The washers shall meet the requirements of ASTM F436. The bolts, nuts and washers shall be galvanized in accordance with ASTM F2329 or ASTM B695, Class 55.

Dome head bolts with wrench slots shall meet the requirements of ASTM F3125, Grade A325, Type 1 or ASTM A449, Grade 1. The nuts shall meet the requirements of ASTM A563, Grade DH. The washers shall meet the requirements of ASTM F436. The bolts, nuts and washers shall be galvanized in accordance with ASTM F2329 or ASTM B695, Class 55.

Concrete inserts shall meet the requirements shown on the plans. The concrete inserts shall be hot dip galvanized in accordance with ASTM A153. The bolts shall meet the requirements of ASTM A307 and the washers shall meet the requirements of ASTM F436. The bolts and washers shall be galvanized in accordance with ASTM F2329.

Epoxy grout shall capable of being installed in the void below the baseplate and meet the following requirements:

Compressive strength, ASTM C579, @ 73 degrees F, 10,000 psi
Tensile strength, ASTM C307 @ 7 days or ASTM D638 @ 7 days, 2,000 psi
Bond strength to concrete, ASTM C882, concrete failure
Bond strength to steel, ASTM C882, 2,500 psi
Volatile organic compounds (VOC), 0.0
Color, gray or concrete gray

Damaged areas of the hot-dip galvanized coatings shall be repaired in accordance with ASTM A780 amended as follows:

Paints containing zinc dust used for repairs shall contain either between 65% to 69% metallic zinc by weight or greater than 92% metallic zinc by weight in dry film.

Construction Methods:

A. Submittals: Prior to fabrication, the Contractor shall submit shop drawings for the bridge rail at each location in accordance with Article 1.05.02 and welding procedures in accordance with Article 1.05.17.

Prior to placing the epoxy grout, the Contractor shall submit the following to the Engineer for review in accordance with Article 1.05.02 Product Data requirements:

1. A copy of the epoxy grout manufacture's data sheet documenting the grout meets the specification requirements.
2. A copy of the epoxy grout manufacturer's printed installation instructions (MPII)
3. A copy of the epoxy grout manufacturer's printed safety instructions

B. Fabrication Requirements: The steel fabricator shall meet the requirements of the AISC Certification Program for Manufacturers of Bridge and Highway Components (CPT).

Shop fabrication of the bridge rail shall meet the requirements of Article 6.03.03-3. Structural steel elements of the bridge rail shall be prepared for galvanizing in accordance with Article M.06.02.

After galvanizing, surfaces with inadequate zinc thickness shall be repaired in the shop according to ASTM A780 and ASTM A123, with the exception that only brush applied flat, light gray zinc rich coating shall be permitted. Aerosol spray or galvanizing repair stick products shall not be used. Surfaces of galvanized steel that are damaged after the galvanizing operation shall be repaired in accordance with ASTM A780 whenever damage exceeds 0.1875 inch in width or 4 inches in length. Damage that occurs in the shop shall be repaired in the shop.

C. Installation Requirements: The anchor rods shall be securely bolted to anchor plates to create anchorage assemblies. The anchorage assemblies shall be accurately positioned and restrained to prevent movement during field placement of the concrete. The concrete inserts shall be accurately positioned and restrained against movement during the placement of concrete.

Field installation of the rail components shall be as shown on the plans.

The connection of the post baseplate to the anchor rods shall be a double nut connection. The post baseplate shall be installed on washers supported by leveling nuts. The baseplate shall be secured in place with a washer topped with a nuts at each anchor rod.

High-strength bolts, including nuts and washers, shall be installed and tensioned in accordance with Subarticle 6.03.03-5(f).

Dome headed bolts shall be installed with a washer, a lock washer and nut.

Epoxy grout shall be placed between the concrete curb and the baseplate at all post locations. The concrete and steel surfaces that will be in contact with the grout shall be dry, clean and free of all loose concrete and contaminants. The galvanized surface of the baseplate shall not be abrasively cleaned. Solvent cleaning is acceptable if allowed by the epoxy grout manufacturer. The grout shall be placed within an area formed around each baseplate. The forms shall be liquid tight and treated with a form release agent. The forms shall have chamfer strips placed along all vertical and horizontal finished grout edges. The vertical faces of the grout shall extend beyond the vertical edges of the baseplate.

Prior to placing the epoxy grout, the curb concrete shall have obtained the compressive strength shown on the plans.

The grout shall be mixed and placed in accordance with the manufacturer's printed installation and safety instructions. Conditions, including the temperature of the mixed grout, air and substrate, at the time of the installation shall meet the manufacturer's recommendations. The grout shall be placed from one side allowing it to flow beneath the baseplate to the formed surfaces and avoid air entrapment. After removal of the forms, rough surfaces and edges shall be trimmed or ground down to provide smooth surfaces and defined edges.

Damage that occurs to the hot-dip galvanized surfaces during transport or during installation shall be repaired in accordance with the requirements of ASTM A780. If paint containing zinc dust is used for repairs, the dry coating thickness shall be at least 50% greater than the thickness of the adjacent hot-dip galvanized coating, but no greater than 4.0 mils. The paint shall be brush applied. The use of aerosol spray cans or galvanizing repair stick is not permitted. The color of the finished repair area shall match the color of the adjacent hot-dip galvanized surface at the time of the repair to the satisfaction of the Engineer.

During installation of the rail and any component parts, the Contractor shall take necessary precautions to prevent any injury or property damage from any falling materials.

All work shall proceed in accordance with the special provisions "Maintenance and Protection of Traffic" and "Prosecution and Progress."

Method of Measurement:

This work will be measured for payment by the number of linear feet of bridge rail installed, complete and accepted, measured within the pay limits shown on the plans.

Basis of Payment:

This work will be paid for at the Contract unit price per linear foot for "3-Tube Curb Mounted Bridge Rail," complete and accepted in place, which price shall include all materials, equipment, tools, and labor incidental thereto.

Pay Item	Pay Unit
3-Tube Curb Mounted Bridge Rail	LF

ITEM #0915000A – TREE PROTECTION

Work under this item shall conform to the requirements of Section 9.15, amended as follows:

Description:

Add the following:

This work will include the installation, maintenance and removal of tree protection devices as indicated or directed by the Engineer.

Materials:

Add the following at the end of the sentence:
Wood shall be framing nominal dimension lumber 6 feet long of varying width and thickness from 2”x2” to 2” x 6” depending on trunk diameter. The binding shall be single strand 9 gauge wire or 1/2" strapping.

Construction Methods:

Add the following:

Prior to construction the Contractor shall place the tree protection devices at the locations shown on the Plans or as directed by the Engineer. The attachments shall be carefully place as not to damage the tree.

Method of Measurement:

Add the following:

Tree protection will measured on a per each for each device that that is installed and accepted.

Basis of Payment:

Add the following:

Tree protection will be paid for at the contract unit price per each device that is measure and accepted including all materials, labor, tools, and equipment incidental to the Work.

Pay Item	Pay Unit
Tree Protection	EA

ITEM #0921007A – MONOLITHIC CONCRETE SIDEWALK AND CURB

Work under this item shall conform to the requirements of Section 9.21, amended as follows:

Construction Methods:

Add the following:

Construction of Monolithic Concrete Sidewalk and Curb shall conform to the details and be constructed in locations shown on the plans.

Method of Measurement:

Add the following:

The Monolithic Concrete Sidewalk and Curb will be measured by the number of square feet that is completed and accepted.

Basis of Payment:

The work will be paid for at the contract unit price per square foot for "Monolithic Concrete Sidewalk and Curb" complete in place which price shall include excavation, process gravel, concrete, and all materials, tools, equipment, labor and work incidental thereto.

Pay Item	Pay Unit
Monolithic Concrete Sidewalk and Curb	SF

ITEM #0950019A – TURF ESTABLISHMENT - LAWN

Description:

The work included in this item shall consist of providing an accepted stand of grass by furnishing and placing seed as shown on the plans or as directed by the Engineer.

Materials:

The materials for this work shall conform to the requirements of Section 9.50 of Standard Specification Form 818. The following mix shall be used for this item:

Turf Seed Mix:
In order to preserve and enhance the diversity, the source for seed mixtures shall be locally obtained within the Northeast USA including New England, New York, Pennsylvania, New Jersey, Delaware, or Maryland. One approved seed mixture is detailed below. Other proposed mixtures must be approved by the ConnDOT Landscape Design office.

Proportion (Percent)	Species Common name	Scientific name
20	Kentucky Bluegrass Improved varieties	Poa pratensis
45	Red Fescue Improved varieties	Festuca rubra
35	Perennial Ryegrass Improved varieties	Lolium perenne

Construction Methods:

Construction Methods shall be those established as agronomically acceptable and feasible and that are approved by the Engineer. Rate of application shall be field determined in Pure Live Seed (PLS) based on the minimum purity and minimum germination of the seed obtained. Calculate the PLS for each seed species in the mix. Adjust the seeding rate for the above composite mix, based on 250 lbs. per acre. The seed shall be mulched in accordance with Article 9.50.03.

Method of Measurement:

This work will be measured for payment by the number of square yards of surface area of accepted established grasses as specified or by the number of square yards of surface area of seeding actually covered and as specified.

Basis of Payment:

This work will be paid for at the contract unit price per square yard for "Turf Establishment - Lawn" which price shall include all seeding, mulch, materials, maintenance, equipment, tools, labor, mowing, and work incidental thereto. Partial payment of up to 60% may be made for work completed, but not accepted.

Pay Item	Pay Unit
Turf Establishment - Lawn	SY

ITEM #0969060A - CONSTRUCTION FIELD OFFICE, SMALL

Description:

Under the item included in the bid document, adequate weatherproof office quarters shall be maintained and related furnishings, materials, equipment and other services, shall be provided by the Contractor for the duration of the work, and if necessary, for a close-out period determined by the Engineer. The office, furnishings, materials, equipment, and services are for the exclusive use of City of Meriden (City) forces, the Contractor, and others who may be engaged to augment City forces with relation to the Contract. The City has acquired the property located at 261 Cook Avenue, Meriden, CT for use as the Field Office for this project. The unit is 2 floors and is equipped with both kitchen and bathroom facilities. Liability of the office quarters shall remain with the Contractor.

Furnishings/Materials/Supplies/Equipment:

All furnishings, materials, equipment and supplies shall be in like new condition for the purpose intended and require approval of the Engineer.

Office Requirements:

The Contractor shall furnish the office quarters and equipment as described below:

Office Layout: The office shall be as provided by the City of Meriden, and shall be partitioned so there is a separation between the City and the Contractor.

Lavatory Facilities: The Field Office is equipped by the City with a toilet facility that is properly ventilated and complies with applicable sanitary codes for use by the Contractor and City personnel and such assistants as they may engage; The lavatory shall have hot and cold running water and a flush-type toilet. For all facilities the Contractor shall supply lavatory and sanitary supplies, as well as cleaning services as necessary.

Windows and Entrances: The windows shall be of a type that will open and close conveniently, shall be sufficient in number and size to provide adequate light and ventilation, and shall be fitted with locking devices, blinds and screens. The entrances shall be secure, screened, and fitted with a lock for which four keys shall be furnished. Copies of all keys to the construction field office shall be furnished to the City and will be kept in their possession. Any access to the entrance ways shall meet applicable building codes, with appropriate handrails. Stairways shall be ADA/ABA compliant and have non-skid tread surfaces.

Lighting: The City shall equip the office interior with electric lighting that provides a minimum illumination level of 100 foot-candles at desk level height, and electric outlets for each desk and drafting table. The Contractor shall provide exterior lighting that provides a minimum illumination level of 2 foot-candles throughout the parking area and for a minimum distance of 10 ft. on each side of the field office.

Parking Facility: The Contractor shall maintain the existing parking area, adjacent to the field office. If a paved parking area is not readily available, the Contractor shall construct a parking area and driveway consisting of a minimum of 6 inches of processed aggregate base graded to drain. The base material will be extended to the office entrance.

Field Office Security: Physical Barrier Devices - This shall consist of physical means to prevent entry, such as: 1) All windows shall be barred or security screens installed; 2) All field office doors shall be equipped with dead bolt locks and regular day operated door locks; and 3) Other devices as directed by the Engineer to suit existing conditions.

Electric Service: The City shall equip the field office with an electric service panel, wiring, outlets, etc., to serve the electrical requirements of the field office, including: lighting, general outlets, computer outlets, calculators etc., and meets the following minimum specifications:

A. 120/240 volt, 1 phase, 3 wire
B. Ampacity necessary to serve all equipment. Service shall be a minimum 100 amp dedicated to the construction field office.
C. The electrical panel shall include a main circuit breaker and branch circuit breakers of the size and quantity required.
D. Additional 120 volt, single phase, 20 amp, isolated ground dedicated power circuit with dual NEMA 5-20 receptacles will be installed at each desk and personal computer table (workstation) location.
E. Additional 120 volt, single phase, 20 amp, isolated ground dedicated power circuit with dual NEMA 5-20 receptacles will be installed, for use by the Telephone Company.
F. Additional 120-volt circuits and duplex outlets as required meeting National Electric Code requirements.
G. One exterior (outside) wall mounted GFI receptacle, duplex, isolated ground, 120 volt, straight blade.

Heating, Ventilation and Air Conditioning (HVAC): The City shall equip the field office with sufficient heating equipment to maintain a temperature range of 68°- ambient temperature Fahrenheit within the field office.

Telephone Service: The Contractor shall provide telephone service. The Contractor shall pay all charges.

Additional Equipment, Facilities and Services: The Contractor shall provide at the field Office at least the following to the satisfaction of the Engineer:

Furnishing Description	Office Size			
	Small	Med.	Large	Extra Large
	Quantity			
Office desk (2.5 ft. x 5 ft.) with drawers, locks, and matching desk chair that have pneumatic seat height adjustment and dual wheel casters on the base.	1	3	5	8

Furnishing Description	Office Size			
	Small	Med.	Large	Extra Large
	Quantity			
Standard secretarial type desk and matching desk chair that has pneumatic seat height adjustment and dual wheel casters on the base.	-	-	-	1
Personal computer tables (4 ft. x 2.5 ft.).	2	3	5	8
Drafting type tables (3 ft. x 6 ft.) and supported by wall brackets and legs; and matching drafters stool that have pneumatic seat height adjustment, seat back and dual wheel casters on the base.	1	1	1	2
Conference table, 3 ft. x 12 ft.	-	-	-	1
Table – 3 ft. x 6 ft.	-	-	-	1
Office Chairs.	2	4	8	20
Mail slot bin – legal size.	-	-	1	1
Non-fire resistant cabinet.	-	-	2	4
Fire resistant cabinet (legal size/4 drawer), locking.	1	1	2	3
Storage racks to hold 3 ft. x 5 ft. display charts.	-	-	1	2
Vertical plan racks for 2 sets of 2 ft. x 3 ft. plans for each rack.	1	1	2	2
Double door supply cabinet with 4 shelves and a lock – 6 ft. x 4 ft.	-	-	1	2
Case of cardboard banker boxes (Min 10 boxes/case)	1	1	2	3
Open bookcase – 3 shelves – 3 ft. long.	-	-	2	2
White Dry-Erase Board, 36” x 48”min. with markers and eraser.	1	1	1	1
Interior partitions – 6 ft. x 6 ft., soundproof type, portable and freestanding.	-	-	6	6
Coat rack with 20 coat capacity.	-	-	-	1
Wastebaskets - 30 gal., including plastic waste bags.	1	1	1	2
Wastebaskets - 5 gal., including plastic waste bags.	1	3	6	10
Electric wall clock.	-	-	-	2
Telephone.	1	1	1	-
Full size stapler 20 (sheet capacity, with staples)	1	2	5	8
Desktop tape dispensers (with Tape)	1	2	5	8
8 Outlet Power Strip with Surge Protection	3	4	6	9
Rain Gauge	1	1	1	1
Business telephone system for three lines with ten handsets, intercom capability, and one speaker phone for conference table.	-	-	-	1
Mini refrigerator - 3.2 c.f. min.	1	1	1	1
Hot and cold water dispensing unit. Disposable cups and bottled water shall be supplied by the Contractor for the duration of the project.	1	1	1	1
Microwave, 1.2 c.f. , 1000W min.	1	1	1	1

Furnishing Description	Office Size			
	Small	Med.	Large	Extra Large
	Quantity			
Fire extinguishers - provide and install type and *number to meet applicable State and local codes for size of office indicated, including a fire extinguisher suitable for use on a computer terminal fire.	*	*	*	*
Electric pencil sharpeners.	1	2	2	2
Electronic office type printing calculators capable of addition, subtraction, multiplication and division with memory and a supply of printing paper.	1	1	2	4
Small Multi-Function Laser Printer/Copier/Scanner/Fax combination unit, network capable, as specified below under Computer Related Hardware and Software.	1	1		
Large Multi-Function Laser Printer/Copier/Scanner/Fax combination unit, network capable, as specified below under Computer Related Hardware and Software.			1	1
Field Office Wi-Fi Connection as specified below under Computer Related Hardware and Software	1	1	1	1
Wi-Fi Printer as specified below under Computer Related Hardware and Software.	1	1	1	1
Digital Camera as specified below under Computer Related Hardware and Software.	1	1	3	3
Video Projector as specified below under Computer Related Hardware and Software.	-	-	-	1
Smart Board as specified below under Computer Related Hardware and Software.	-	-	-	1
Infrared Thermometer, including annual third party certified calibration, case, and cleaning wipes.	1	1	1	2
Concrete Curing Box as specified below under Concrete Testing Equipment.	1	1	1	1
Concrete Air Meter and accessories as specified below under Concrete Testing Equipment as specified below. Contractor shall provide third party calibration on a quarterly basis.	1	1	1	1
Concrete Slump Cone and accessories as specified below under Concrete Testing Equipment.	1	1	1	1
First Aid Kit	1	1	1	1
Flip Phones as specified under Computer Related Hardware and Software.	-	-	-	-
Smart Phones as specified under Computer Related Hardware and Software.	-	-	-	-

The Contractor shall also provide a sufficient number of air conditioning units for the Field Office that will adequately maintain a temperature range of 68°-75° Fahrenheit within the field office.

The furnishings and equipment required herein shall remain the property of the Contractor. Any supplies required to maintain or operate the above listed equipment or furnishings shall be provided by the Contractor for the duration of the project.

Computer Related Hardware and Software: The City will supply by its own means the actual Personal Computers for the City representatives. The Contractor shall supply the Field Office Wi-Fi Connection, Wi-Fi Printer, Digital Camera(s), Flip Phones, Smart Phones, Multifunction Laser Printer/Copier/Scanner/Fax, Video Projectors, and Smart Board(s) as well as associated hardware and software, must meet the requirements of this specification.

Within 10 calendar days after the signing of the Contract but before ordering/purchasing the Wi-Fi Printer (separate from the Multifunction Laser Printer/Copier/Scanner/Fax), Field Office Wi-Fi, Digital Camera(s), Flip Phones, Smart Phones, Multifunction Laser Printer/Copier/Scanner/Fax, Video Projector(s) and Smart Board(s) as well as associated hardware, the Contractor must submit a copy of their proposed order(s) with catalog cuts and specifications to the City for review and approval. The Wi-Fi Printer, Wi-Fi Router, Flip Phones, Smart Phones, digital cameras, Projector(s) and Smart Board(s) will be reviewed by City personnel. The Multifunction Laser Printer/Copier/Scanner/Fax will also be reviewed by the City. The Contractor shall not purchase the hardware, software, or services until the City informs them that the proposed equipment, software, and services are approved. The Contractor will be solely responsible for the costs of any hardware, software, or services purchased without approval.

The Contractor and/or their internet service provider shall be responsible for the installation and setup of the field office Wi-Fi, Wi-Fi printer, and the configuration of the wireless router as directed by the City. Installation will be coordinated with City and Project personnel.

After the approval of the hardware and software, the Contractor shall contact the designated representatives of the City, a minimum of 2 working days in advance of the proposed delivery or installation of the Field Office Wi-Fi Connection, Wi-Fi Printer, Digital Camera(s), Flip Phones, Smart Phones, Multifunction Laser Printer/Copier/Scanner/Fax, Video Projectors and Smart Board(s), as well as associated hardware, software, supplies, and support documentation.

The Contractor shall provide all supplies, paper, maintenance, service and repairs (including labor and parts) for the Wi-Fi printers, copiers, field office Wi-Fi, fax machines and other equipment and facilities required by this specification for the duration of the Contract. All repairs must be performed with-in 48 hours. If the repairs require more than a 48 hours then an equal or better replacement must be provided.

Once the Contract has been completed, the hardware and software will remain the property of the Contractor.

First Aid Kit: The Contractor shall supply a first aid kit adequate for the number of personnel expected based on the size of the field office specified and shall keep the first aid kit stocked for the duration that the field office is in service.

Rain Gauge: The Contractor shall supply install and maintain a rain gauge for the duration of the project, meeting these minimum requirements. The rain gauge shall be installed on the top of a post such that the opening of the rain gauge is above the top of the post an adequate distance to avoid splashing of rain water from the top of the post into the rain gauge. The Location of the rain gauge and post shall be approved by the Engineer. The rain gauge shall be made of a durable material and have graduations of 0.1 inches or less with a minimum total column height of 5 inches. If the rain gauge is damaged the Contractor shall replace it prior to the next forecasted storm event at no additional cost.

Concrete Testing Equipment: If the Contract includes items that require compressive strength cylinders for concrete, in accordance with the Schedule of Minimum Testing Requirements for Sampling Materials for Test, the Contractor shall provide the following equipment.

A) Concrete Cylinder Curing Box – meeting the requirements of Section 6.12 of the Standard Specifications.

B) Air Meter – The air meter provided shall be in good working order and meet the requirements of AASHTO T 152.

C) Slump Cone Mold – Slump cone, base plate, and tamping rod shall be provided in like-new condition and meet the requirements of AASHTO T119, Standard Test Method for Slump of Hydraulic-Cement Concrete.

All testing equipment will remain the property of the Contractor at the completion of the project.

Insurance Policy: The Contractor shall provide a separate insurance policy, with no deductible, in the minimum amount of five thousand dollars ($5,000) in order to insure all State-owned data equipmentand supplies used in the office against all losses. The Contractor shall be named insured on that policy, and the City of Meriden shall be an additional named insured on the policy. These losses shall include, but not be limited to: theft, fire, and physical damage. The City will be responsible for all maintenance costs of City owned computer hardware. In the event of loss, the Contractor shall provide replacement equipment in accordance with current City equipment specifications, within seven days of notice of the loss. If the Contractor is unable to provide the required replacement equipment within seven days, the City may provide replacement equipment and deduct the cost of the equipment from monies due or which may become due the Contractor under the Contract or under any other contract. The Contractor's financial liability under this paragraph shall be limited to the amount of the insurance coverage required by this paragraph. If the cost of equipment replacement required by this paragraph should exceed the required amount of the insurance coverage, the City will reimburse the Contractor for replacement costs exceeding the amount of the required coverage.

Maintenance: During the occupancy, the Contractor shall maintain all facilities and furnishings provided under the above requirements, and shall maintain and keep the office quarters clean through the use of weekly professional cleaning to include, but not limited to, washing & waxing floors, cleaning restrooms, removal of trash, etc. Exterior areas shall be mowed and clean of debris. A trash receptacle (dumpster) with weekly pickup (trash removal) shall be provided. Snow removal, sanding and salting of all parking, walkway, and entrance ways areas shall be accomplished during a storm if on a workday during work hours, immediately after a storm and prior to the start of a workday. If snow removal, salting and sanding are not completed by the

specified time, the City will provide the service and all costs incurred will be deducted from the next payment estimate.

Method of Measurement:

The furnishing and maintenance of the construction field office will be measured for payment by the number of calendar months that the office is in place and in operation, rounded up to the nearest month.

There will not be any price adjustment due to any change in the minimum computer related hardware and software requirements.

Basis of Payment:

The furnishing and maintenance of the Construction Field Office will be paid for at the Contract unit price per month for "Construction Field Office, (Small)," which price shall include all material, equipment, labor, service contracts, licenses, software, repair or replacement of hardware and software, related supplies, utility services, parking area, external illumination, trash removal, snow and ice removal, and work incidental thereto, as well as any other costs to provide requirements of this specified this specification.

Pay Item	Pay Unit
Construction Field Office, (Small)	MONTH

ITEM NO. 0971001A – MAINTENANCE AND PROTECTION OF TRAFFIC

Description: is supplemented by the following:

The Contractor shall maintain and protect traffic as described by the following and as limited in the special provision for Section 1.08 - Prosecution and Progress:

Strike-out the following: The Contractor shall provide the Engineer the name of the person who shall be responsible for installing and maintaining all temporary traffic control devices in work zones on limited access highways.

This person shall be certified as a Traffic Control Supervisor by ATSSA, or other qualification acceptable to the Department. This certification or qualification shall be maintained and valid throughout the duration of the Contract.

Commercial and Residential Driveways
The Contractor shall maintain access to and egress from all commercial and residential driveways throughout the Project limits. The Contractor will be permitted to temporarily close ½ of affected driveways or 1 driveway when there are multiple property accesses, while actively working with coordination and permission from the owner or proprietor.

Intermediate Term Sidewalk Closures
The Contractor shall maintain and protect existing ADA compliant pedestrian accommodations, or a minimum of 4 feet in width, on all existing sidewalks, sidewalk ramps, and access to pedestrian pushbuttons, with the following exception:

- During the allowable periods and when the Contractor is actively constructing pedestrian amenities or installing signal equipment, the Contractor will be allowed to close pedestrian sidewalks and sidewalk ramps and restrict access to pedestrian pushbuttons for no more than a continuous 48-hour period of time.

No more than two corners of an intersection may be closed for an intermediate term sidewalk closure at any time. Where all four corners of an intersection have sidewalks and sidewalk ramps, diagonal corners shall not be closed at the same time.

During the intermediate term sidewalk closure, all approaches to the sidewalk shall be blocked by Construction Barricades with Sidewalk Closed signs.

The contractor shall maintain ADA compliant pedestrian access through the site at all times. This may be achieved through use of drums, cones, barricades, signs, and other pedestrian traffic protection measures.

The Contractor shall ensure that traffic control signals with pedestrian phases where access to the pushbuttons cannot be provided are revised at the start of the closure to automatically activate the pedestrian phase every signal cycle.

- Intermediate term sidewalk closures may be extended with prior approval of the Engineer.

Parking Areas
The contractor is required to maintain the existing number of parking spaces on the project site at all times. Should it be necessary to block parking spaces during the course of construction, the number of parking spaces blocked are to be provided elsewhere on the site. The Contractor may make use of temporary parking areas, as indicated on the plans.
The contractor shall maintain safe vehicular access through the site at all times. This may be achieved through the use of drums, cones, barricades, signs, and other vehicular traffic protection measures.

MPT for privately owned areas is not graphically depicted on the project plans. The Contractor shall develop a Maintenance and Protection of Traffic Plan for privately owned site parking and accessways for the areas depicted on Sheet MPT-101 and as necessary to provide safe and timely pedestrian and vehicular access, for approval by the Engineer.

Construction Methods: is supplemented as follows:

General
The unpaved section shall be the full width of the road and shall be perpendicular to the travel lanes. The Contractor will be allowed to maintain traffic on processed aggregate for a duration not to exceed 30 calendar days and opposing traffic lane dividers shall be used as a centerline, except for parking areas.

The Contractor is required to delineate any raised structures within the travel lanes, so that the structures are visible day and night, unless there are specific Contract plans and provisions to temporarily lower these structures prior to the completion of work.

The Contractor shall schedule operations so that pavement removal and roadway resurfacing shall be completed full width across a roadway or bridge section by the end of a work shift, or as directed by the Engineer.

When the installation of all intermediate courses of bituminous concrete pavement is completed for the entire roadway, the Contractor shall then install the final course of bituminous concrete pavement.

When the Contractor is excavating adjacent to the roadway, the Contractor shall provide a 3-foot shoulder between the work area and travel lanes, with traffic drums spaced every 50 feet. At the end of the work shift if the vertical drop-off exceeds 3 inches, the Contractor shall provide a temporary bituminous concrete traversable slope of 4:1 or flatter that is acceptable to the Engineer.

The Contractor, during the course of any active overhead construction work, shall close the lanes directly below the work area for the entire length of time overhead work is being undertaken. At no time shall an overhead sign/object be left partially removed or installed.

When an existing sign is to be relocated or replaced, the work shall be completed during the same work shift.

The field installation of a signing pattern shall constitute interference with existing traffic operations and shall not be allowed, except during the allowable periods.

Existing Signing
The Contractor shall maintain all existing overhead and side-mounted signs within the Project limits throughout the duration of the Project. The Contractor shall temporarily relocate signs and sign supports as many times as deemed necessary, and shall install temporary sign supports if necessary and as directed by the Engineer.

Requirements for Winter
The Contractor shall schedule a meeting with representatives of the City, including the offices of Engineering Traffic, to determine any interim traffic control measures the Contractor shall accomplish prior to winter to provide safety to motorists and permit adequate snow removal procedures. This meeting shall be held prior to **October 31 of each year** and will include, but not be limited to, discussion of the status and schedule of the following items: lane and shoulder widths, pavement restoration, traffic signal work, pavement markings, and signing.

Signing Patterns
The Contractor shall erect and maintain all signing patterns in accordance with the traffic control plans contained herein. Proper distances between advance warning signs and proper taper lengths are mandatory.

See Plans MPT-100 through MPT-103. As noted in the Section 1.08.01 Limit of Operations, the Contractor must submit any revisions to the proposed traffic control plans or any other traffic related changes to the Engineer for review and approval at least 30 days prior to implementation.

When a scheme for maintenance of traffic, which may include detours, is shown on the plans or described in the special provisions; this shall govern unless an alternate scheme acceptable to the Engineer is offered by the Contractor at no additional cost. If no scheme is shown on the plans or described in the special provisions, and the Contractor wishes to deviate from the provisions of maintaining traffic as described in this Section, the Contractor may submit and the Engineer may approve a schedule showing a proposed sequence of operations and a compatible method of maintaining traffic.

Article 9.71.05 – Basis of Payment is supplemented by the following:

The temporary relocation of signs and supports, and the furnishing, installation and removal of any temporary supports shall be paid for under the item "Maintenance and Protection of Traffic".

Any modifications to the Traffic Control Plans (MPT-101 through MPT-103) will be paid for under the item "Maintenance and Protection of Traffic".

The cost of furnishing, installing, and removing the material for the 4H:1V traversable slope shall be paid for under the item "Maintenance and Protection of Traffic".

All Maintenance and Protection of Traffice items that are not individually paid for separately will be paid for here.

Pay Item	Pay Unit
Maintenance and Protection of Traffic	LS

WORK IN TRAVEL LANE AND SHOULDER
TWO LANE HIGHWAY
ALTERNATING ONE-WAY TRAFFIC OPERATIONS

SIGN FACE
108 SQ. FT (MIN.)

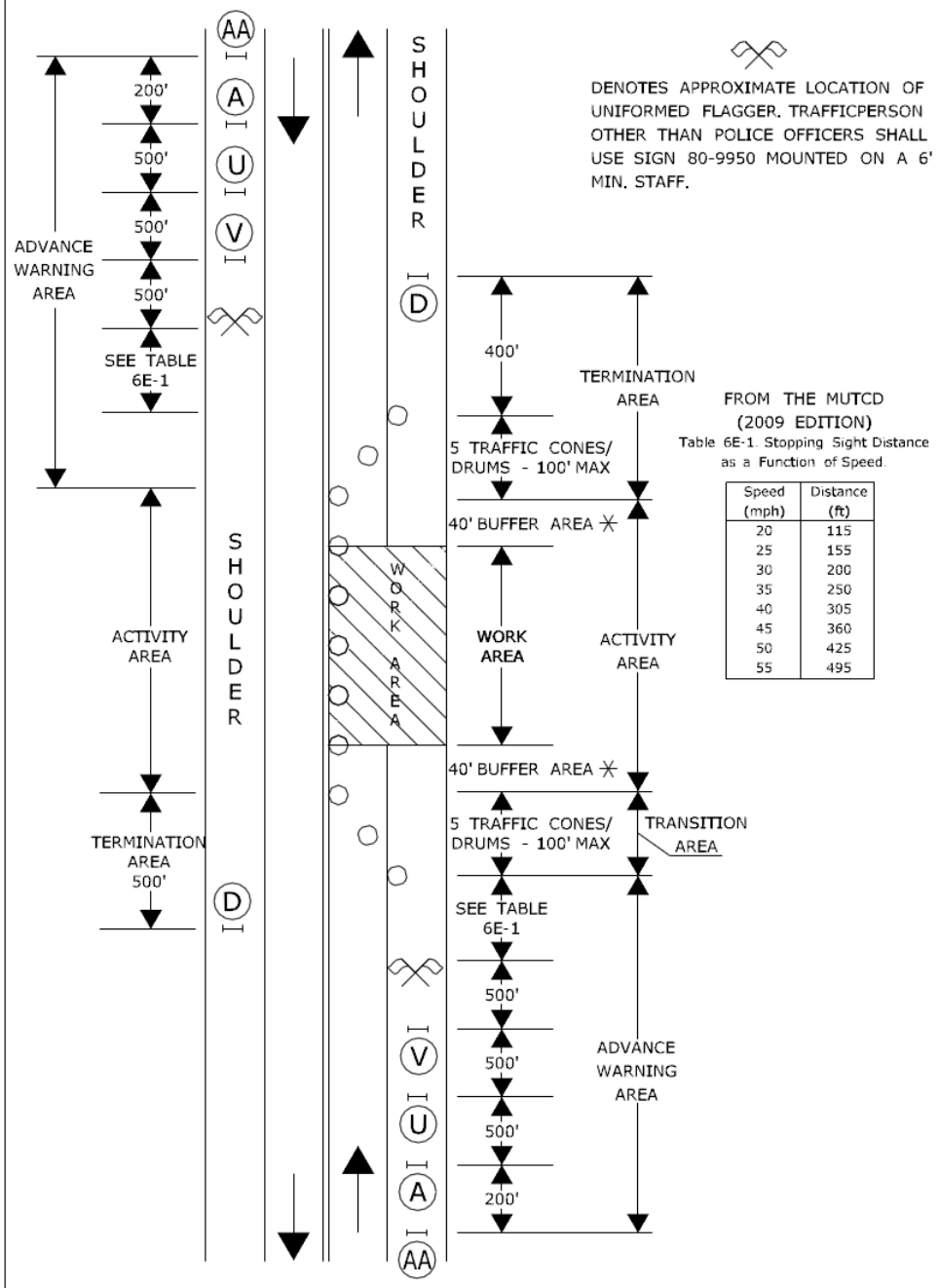

FROM THE MUTCD
(2009 EDITION)
Table 6E-1. Stopping Sight Distance as a Function of Speed

Speed (mph)	Distance (ft)
20	115
25	155
30	200
35	250
40	305
45	360
50	425
55	495

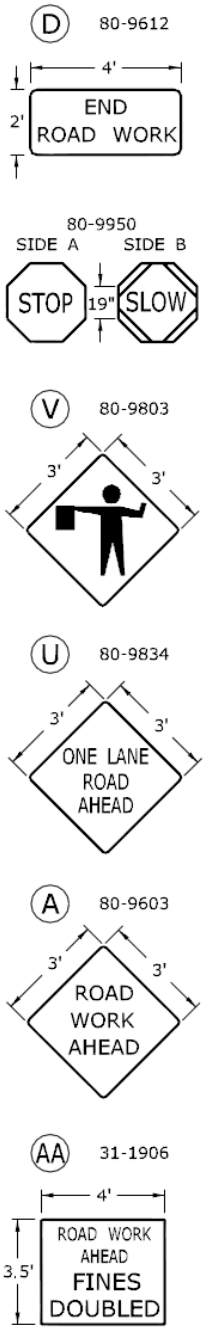

◯ TRAFFIC CONE **OR** TRAFFIC DRUM
✳ OPTIONAL ⊗ TRAFFIC DRUM ⊢⊣ PORTABLE SIGN SUPPORT
⟵ HIGH MOUNTED INTERNALLY ILLUMINATED FLASHING ARROW

SCALE: NONE

CONSTRUCTION TRAFFIC CONTROL PLAN

PLAN 13 - SHEET 1 OF 2

SEE NOTES 1, 2, 4, 6, 7, 8

CONNECTICUT DEPARTMENT OF TRANSPORTATION
BUREAU OF ENGINEERING & CONSTRUCTION

APPROVED Charles S. Harlow 2012.06.05 15:55:23-04'00'
PRINCIPAL ENGINEER

ITEM #971001A

WORK IN TRAVEL LANE AND SHOULDER
TWO LANE HIGHWAY
ALTERNATING ONE-WAY TRAFFIC OPERATIONS

SIGN FACE
108 SQ. FT (MIN.)

HAND SIGNAL METHODS TO BE USED BY UNIFORMED FLAGGERS

THE FOLLOWING METHODS FROM SECTION 6E.07, FLAGGER PROCEDURES, IN THE "MANUAL ON UNIFORM TRAFFIC CONTROL DEVICES," SHALL BE USED BY UNIFORMED FLAGGERS WHEN DIRECTING TRAFFIC THROUGH A WORK AREA. THE STOP/SLOW SIGN PADDLE (SIGN NO. 80-9950) SHOWN ON THE TRAFFIC STANDARD SHEET TR-1220 01 ENTITLED, "SIGNS FOR CONSTRUCTION AND PERMIT OPERATIONS" SHALL BE USED.

A. TO STOP TRAFFIC

TO STOP ROAD USERS, THE FLAGGER SHALL FACE ROAD USERS AND AIM THE STOP PADDLE FACE TOWARD ROAD USERS IN A STATIONARY POSITION WITH THE ARM EXTENDED HORIZONTALLY AWAY FROM THE BODY. THE FREE ARM SHALL BE HELD WITH THE PALM OF THE HAND ABOVE SHOULDER LEVEL TOWARD APPROACHING TRAFFIC.

B. TO DIRECT TRAFFIC TO PROCEED

TO DIRECT STOPPED ROAD USERS TO PROCEED, THE FLAGGER SHALL FACE ROAD USERS WITH THE SLOW PADDLE FACE AIMED TOWARD ROAD USERS IN A STATIONARY POSITION WITH THE ARM EXTENDED HORIZONTALLY AWAY FROM THE BODY. THE FLAGGER SHALL MOTION WITH THE FREE HAND FOR ROAD USERS TO PROCEED.

C. TO ALERT OR SLOW TRAFFIC

TO ALERT OR SLOW TRAFFIC, THE FLAGGER SHALL FACE ROAD USERS WITH THE SLOW PADDLE FACE AIMED TOWARD ROAD USERS IN A STATIONARY POSITION WITH THE ARM EXTENDED HORIZONTALLY AWAY FROM THE BODY. TO FURTHER ALERT OR SLOW TRAFFIC, THE FLAGGER HOLDING THE SLOW PADDLE FACE TOWARD ROAD USERS MAY MOTION UP AND DOWN WITH THE FREE HAND, PALM DOWN.

◯ TRAFFIC CONE **OR** TRAFFIC DRUM
✳ OPTIONAL ⊗ TRAFFIC DRUM ⊢⊣ PORTABLE SIGN SUPPORT
⟵ HIGH MOUNTED INTERNALLY ILLUMINATED FLASHING ARROW

SCALE: NONE

CONSTRUCTION TRAFFIC CONTROL PLAN
PLAN 13 - SHEET 2 OF 2
SEE NOTES 1, 2, 4, 6, 7, 8

CONNECTICUT DEPARTMENT OF TRANSPORTATION
BUREAU OF ENGINEERING & CONSTRUCTION

APPROVED Charles S. Harlow 2012.06.05 15:55:45-04'00'
PRINCIPAL ENGINEER

ITEM #0979004A – CONSTRUCTION BARRICADE DETECTABLE

Section 9.79 is supplemented and amended as follows:

09.79.01—Description:

Replace the entire Article with the following:

Under this item the Contractor shall furnish all Construction Barricade Detectable required on the Project as stated in the item "Maintenance and Protection of Traffic," as shown on the plans, and as directed by the Engineer.

The Construction Barricade Detectable shall conform to the following:

1. have continuous detectable bottom and top surfaces able to be detected by a person with a visual disability traveling with the aid of a long cane;
2. the bottom of the bottom surface shall be no higher than 2 inches above the ground;
3. the top of the top surface shall be no lower than 32 inches above the ground;
4. the requirements of the 2016 AASHTO MASH.

09.79.02—Materials:

Delete the last sentence and add the following:

Prior to using Construction Barricade Detectable on the Project, the Contractor shall submit to the Engineer a copy of the Eligibility Letter issued by the FHWA to the manufacturer documenting that the barricades comply with the requirements of the 2016 AASHTO MASH and are eligible for reimbursement under the Federal-aid highway program.

Pay Item	Pay Unit
Construction Barricade Detectable	EA

ITEM #1300061A - WATER MAIN SUPPORT SYSTEM

Description:

Work under this item shall consist of furnishing and installing all necessary support members, connection plates, and necessary hardware for the support of the water main crossing the Hanover Street bridge. The cost of the rollers shall be included in the cost of Item 1301658A – "10" DUCTILE IRON PIPE INSTALLED ON BRIDGE (WATER MAIN)"

Materials:

Steel plates and rolled shapes shall be ASTM A36 steel. All structural steel plates and shapes shall be hot-dipped galvanized in accordance with ASTM A123. Bolts shall be ASTM A325, Type 1.

U-bolts shall be 7/8-inch steel round bar conforming to the requirements of ASTM A709, Grade 36. The U-bolts, nuts and the base plates shall be hot-dip galvanized in accordance with ASTM A153.

Construction Methods:

Support members shall be securely bolted into place prior to placing other components of the support system. Connection plates shall be field welded to the girders, and diaphragm supports to connection plates, in accordance with 1.05.17. Roller assemblies shall have top and bottom nuts on the threaded rods to allow vertical adjustment of the rollers.

Following installation of the water main the U-bolt hold downs will be installed.

All water main installation work shall be in accordance with the City of Meriden.

Method of Measurement:

This work being paid for on a Lump Sum basis shall not be measured for payment.

Basis of Payment:

This work will be paid for at the contract Lump Sum price for "Water Main Support System", complete in place, which price shall include all materials, equipment, tools and labor incidental thereto.

Pay Item	Pay Unit
Water Main Support System	LS

ITEM #1301081A 6" DUCTILE IRON PIPE (WATER MAIN)
ITEM #1301082A 8" DUCTILE IRON PIPE (WATER MAIN)
ITEM #1301084A 10" DUCTILE IRON PIPE (WATER MAIN)
ITEM #1302003A 6" GATE VALVE
ITEM #1302004A 8" GATE VALVE
ITEM #1302006A 10" GATE VALVE
ITEM #1302047A RESET GATE BOX (WATER MAIN)
ITEM #1302059A ADJUST GATE BOX (WATER MAIN)
ITEM #1302204A 6" x 6" TAPPING SLEEVE AND VALVE
ITEM #1302206A 8" x 8" TAPPING SLEEVE AND VALVE
ITEM #1302208A 10" x 10" TAPPING SLEEVE AND VALVE
ITEM #1302300A 10" CONNECTION TO HANOVER STREET
ITEM #1302301A 8" CONNECTION TO CHERRY STREET

Description

A. This work consists of furnishing and installing ductile iron water mains and appurtenances; removing, resetting, adjusting, or relocating existing water facilities; testing the completed water mains for pressure and leakage requirements; disinfecting all completed water main; in conformity with the requirements of this Specification and other Contract Documents.

B. The Contractor shall coordinate all work with the City of Meriden Water Department. The City shall be responsible for opening and closing all valves as required for the Contractor's work. The Contractor shall notify the City a minimum of 48 hours in advance of any desired valve operations. The Contractor is advised that the Water Department may not be able to respond to valve operation requests within 48 hours because of emergency conditions and that no claim shall be made against the Owner for this occurrence.

C. The Contractor shall notify the City in writing with a copy to the Engineer of any service disruptions related to work on this project at least 48 hours in advance of such disruptions. In addition, a notice concerning service disruptions must be placed in the local newspaper one day before, and also on the actual day of the scheduled disruption.

D. The Contractor shall submit for approval their proposed method and means to provide temporary by-passes as needed.

E. Excavation for watermain shall conform to the Section 2.86 Drainage Trench Excavation.

F. The Contractor shall furnish the Engineer, in the manner as directed, three (3) notarized Certificates of Conformance and Manufacture that all materials and/or equipment to be furnished under this contract meets the specification requirements. When directed, each shipment of material shall be accompanied by the manufacturer's notarized Certificate of Conformance and Manufacture. Unless otherwise specifically specified, all testing of materials shall be provided by the Contractor at no additional expense to the Owner. In addition, each manufacturer's Certificate shall be endorsed or accompanied by the Contractor's Certificate that the material certified by the manufacturer will be the material incorporated in the work.

G. The Contractor shall maintain at the jobsite, in good order, one copy of all contract documents. Upon completion of work, the Contractor shall record on a 24" x 36" mylar set of the contract drawings, at scale 1" =40', any field changes of dimensions and detail that may have occurred, changes by change orders, and details not on the original contract drawings.

Specifically, the following information shall be shown on the record drawings for utilities within the contract work area:

1. As-built surface profile of proposed utility.
2. Top of rock profile, if applicable.
3. All building utility services shall be accurately shown on the map.
4. All newly installed water lines shall be shown with curb boxes, valves, reducers, increasers, T's, hydrants, and house lines. Accurate dimensions to each valve from ranges of buildings or curb lines shall be shown. The proposed water main shall be located from the curb line and labeled with size and date of installation.
5. Building and lot numbers shall be shown for all lots where applicable.

On a set of specifications or plan the Contractor shall legibly mark each section to record the manufacturer, trade name, catalog number and supplier of products which were actually installed. These record documents consisting of contract drawings and specifications shall be delivered to the Engineer as one of the requirements for final payment.

Materials

A. All materials shall be tested at the place of manufacture. All materials shall be subject to careful inspection in the presence of the Engineer or authorized inspector just before being laid or installed and shall be subject to approval before acceptance.

ITEM #1301081A	ITEM #1302047A
ITEM #1301082A	ITEM #1302059A
ITEM #1301084A	ITEM #1302204A
ITEM #1302003A	ITEM #1302206A
ITEM #1302004A	ITEM #1302208A
ITEM #1302006A	ITEM #1302300A
	ITEM #1302301A

All material found during the progress of the work to have cracks, flaws, or other defects shall be rejected by the Engineer or resident representative, and the Contractor shall promptly remove such defective material from the site of the work.

B. The following material specifications are to be followed:

1. Ductile iron pipe and fittings shall be manufactured in accordance with ANSI / AWWA C151 / A21.51, latest revision, thickness Class 52 per AWWA C150, latest revision.
2. Fittings shall be ductile iron rated at 355 psi (or higher as indicated on plans) conforming to AWWA C110, latest revision.
3. Compact style ductile iron mechanical joint fittings shall be ductile iron class 350 in accordance with ANSI / AWWA C-153 / A21.53 and ANSI / AWWA C104 / A21.4 for cement lining. Mechanical joint nuts and bolts shall be high strength low alloy steel per ANSI / A21.11 and shall include all accessories.
4. Ductile iron pipe and fittings shall be provided with a double thickness of cement-mortar lining conforming to ANSI / AWWA C104 / A21.5, latest revision. The cement-mortar lining shall be seal coated.
5. Joints for ductile iron pipe shall be rubber gasket push-on type unless otherwise indicated on plans and shall conform to ANSI / AWWA C150 / A21.50.
6. Fittings shall have mechanical joints with retainer glands rated at 350 psi. Mechanical joint restraint for ductile iron pipe shall conform to ASTM-A-536-84. It shall be Series 1100 Megalug, EBAA Iron Inc. or approved equal
7. Pipe and fitting joints shall conform to AWWA C111, latest revision.
8. Copper tubing shall be Type K, soft copper, shall meet the requirements of Federal Specification WW-T7996 and shall conform to ASTM specification B-75, B-88, and B-68 as they apply to Type K copper tubing.

C. Anchoring couplings shall be ductile iron mechanical joint couplings that provide a positive restrained connection between fitting and valve. Anchoring tees shall have mechanical joint main run ends. The branch shall have a plain end with an integral gland and mechanical joint gland, which can be rotated, to provide a restrained connection with the adjacent valve, fitting, etc. All pipe and fittings shall be plainly marked for weight and pressure rating. Fittings of substandard weight or dimensions will not be accepted.

D. Transition couplings or connecting sleeves shall be Type 44 mechanical sleeve couplings designed for the specific types of pipes to be joined and shall be manufactured by the Smith Blair or approved equal.

E. Concrete for thrust blocks shall conform to the requirements of Article M.03 for Class “A”.

ITEM #1301081A	ITEM #1302047A
ITEM #1301082A	ITEM #1302059A
ITEM #1301084A	ITEM #1302204A
ITEM #1302003A	ITEM #1302206A
ITEM #1302004A	ITEM #1302208A
ITEM #1302006A	ITEM #1302300A
	ITEM #1302301A

F. Strap rods shall be ¾" round steel or wrought iron. Clamps shall not be less than 2" wide and 3/8" thick. Bolts securing clamps shall not be less than 5/8" round. Clamps and rods are to be protected against corrosion by a heavy coat of bituminous asphalt varnish after final assembly.

G. Gate valves (boxes) shall be of iron body, bronze mounted, resilient seated, solid wedge disc, non-rising stem type, fitted with "O" ring seals, conforming to the requirements of AWWA C509, latest revision. Valves shall be suitable for 250 psi minimum working pressure and 450 psi test pressure. The operating nut shall be two (2) inches square and valves shall open "right" or clockwise. All interior and exterior surfaces of the valve body and bonnet and any exposed metallic surfaces of the gate shall be coated with a fusion bonded epoxy conforming to the requirements of AWWA C550, latest revision.

Valve boxes shall be heavy pattern cast-iron, three-piece, screw type construction consisting of top section, mid-section and enlarged base (No. 6 for valve sizes up to 8", and No. 160 for 10" valves) of sufficient length to provide without extension the required cover. The lower section shall be at least 5-1/4" inside diameter belled at the bottom to fit over the valve top. The middle section shall connect securely to the bottom section. The upper section shall screw over the outside threads of the middle section and be provided with a 6" diameter cover with the word "water" cast in raised letters. Valve boxes shall be coated with coal-tar, pitch enamel or equal accepted coating. Valve boxes shall be "Buffalo" type as manufactured by Buffalo Pipe and Foundary, J.C. Clow & Sons, Inc., or equal.

Boxes shall be cast iron, three-piece, screw type 5-1/4" shaft diameter. Boxes shall have the word "WATER" clearly cast into the cover. Boxes must be North American made. Complete box consists of (1) cover, (2) top section, (3) bottom section, (4) #6 base.

Boxes shall have a range of 45" to 66" (26" top, 30" bottom)

H. Curb boxes shall be Buffalo Style screw type, 2-1/2" and must have brass pentagon nut and cover with a flush fit. Curb boxes must be North American made with the top section w/ cover of 2-1/2" x 30" and the base of 2 ½" x 39".

I. Tapping sleeves and valves shall be mechanical joint suitable for 200 psi working pressure. Tapping sleeves shall be similar to Mueller H-615 ductile iron with a Class 125 outlet flange per ANSI B16.1. The operating nut shall be two (2) inches square and shall open "RIGHT" or clockwise.

ITEM #1301081A	ITEM #1302047A
ITEM #1301082A	ITEM #1302059A
ITEM #1301084A	ITEM #1302204A
ITEM #1302003A	ITEM #1302206A
ITEM #1302004A	ITEM #1302208A
ITEM #1302006A	ITEM #1302300A
	ITEM #1302301A

Tapping valves shall be similar to Mueller H-667.

J. Underground-type plastic line marker shall be a manufacturer's standard permanent, bright-colored, continuous-printed plastic tape, not less than 6" wide x 0.1575" thick. Provide blue tape with printing which indicates buried water.

K. Pipe insulation shall conform to the following specifications:

1. Pittsburgh Corning Foamglas Super K insulation, 1.5" thick with an R=4.7 where specified on plans

L. Resilient seat valves shall conform to the following specifications:

1. Open right
2. 250 psi rated working pressure.
3. Must comply fully with AWWA C509
4. MJ X MJ
5. Must have oversized, full port opening and smooth waterway.
6. Must be epoxy coated inside and outside. Must be certified NSF61 and conform to ANSI / AWWA C550 standard.
7. Wedge must provide a positive stop.

M. Miscellaneous materials not specified herein, shall be of the type, size, material and manufacture as shown on the drawings or as required for the installation. Such miscellaneous material shall be as approved by the Engineer.

Construction Methods

A. The construction of new water mains, services, and appurtenances shall be done by the Contractor subject to these documents. The Meriden Water Department shall retain the right to limit the length of time any main, or mains, shall be out of service, as emergency requirements demand. The length of any section of water main, temporarily removed from service for the operations under the Contract, shall be determined by the capability of the distribution system to supply water by other routes to the areas adjacent to or directly affected by the section of service. Water service to individual customers may be interrupted only during the Contractor's work hours and as allowed by the Water Department.

ITEM #1301081A	ITEM #1302047A
ITEM #1301082A	ITEM #1302059A
ITEM #1301084A	ITEM #1302204A
ITEM #1302003A	ITEM #1302206A
ITEM #1302004A	ITEM #1302208A
ITEM #1302006A	ITEM #1302300A
	ITEM #1302301A

B. All pipes, fittings, valves, and hydrants shall be carefully inspected for defects prior to installation.

C. Each pipe shall be placed in the trench carefully. The Contractor shall furnish all slings, or straps to permit satisfactory support of all parts of pipe when it is being handled. The Contractor shall take all necessary precautions to prevent movement of pipe in the event of the trench flooding. Any length of pipe broken or damaged due to mishandling or negligence on the part of the Contractor shall be replaced at no cost to the Owner.

D. Ends of the pipe shall be thoroughly cleaned before the joint is made. The surface of the joint shall be painted with required lubricant applied in accordance with the manufacturer's directions. The lubricant shall be of the type recommended by the pipe manufacturer. Pipes shall be jointed in strict accordance with pipe manufacturer's directions and work shall be done by skilled personnel.

E. Pipe shall be laid on fine sand bedding as shown on the trench details in the contract drawings with the bedding tamped under, around and up to the springline of the pipe.

F. No pipe or fittings shall be laid in water or on a frozen trench bottom or when, in the opinion of the Engineer, the trench conditions or the weather are unsuitable for such work. All joints shall be checked by a feeler ring gauge to insure proper positioning of rubber gaskets. Thrust blocks shall be used in accordance with City of Meriden Standard Details.

G. At locations where water main construction involves abrupt changes in pipe alignment, the changes shall be made with fittings as indicated on the contract drawings or ordered by the Engineer. Changes in pipe alignment shown at other locations shall be made with deflection of pipe joints and short lengths as required.

H. All ductile iron pipe filler pieces that must be cut on-site from full pipe lengths shall be cut with a power saw and prepared in accordance with the pipe manufacturer's recommendations. Insofar as it is practical, the Contractor shall have on hand manufacturer supplied filler pieces (short length of pipe with plain ends) to minimize on-site cutting of pipe.

I. Concrete thrust blocks shall be constructed at all tees, bends, valves, plugs and caps. Thrust blocks shall be of the size indicated on the drawings and shall, in all cases when cast-in-place is approved, be poured against undisturbed earth. Where thrust blocks are in contact with the pipe, concrete shall be kept clear of pipe joints. Thrust blocks shall be used in accordance with City of Meriden Standard Details. Pre-cast

blocks are to be used at all locations where water main is to be placed in service within one day and embedded straps are not required.

J. Ductile iron fittings of the proper type shall be furnished and installed wherever shown in the drawings and as required by the Engineer. All mechanical joints of fitting shall be restrained with retainer glands torqued to 72.5 lb-ft or as recommended by the manufacturer. In addition, all pipe joints within 24 feet of bends or tees shall be restrained (coveralls).

K. Vertical bends were shown on the drawings shall be anchored in both directions with pipe clamps and tie rods. The Contractor shall provide the necessary tie rods and clamps. Tie rods and clamps shall be as manufactured by the Grinnell Company, Inc., or equal.

L. Valves shall be installed in the mains approximately were shown on the contract drawings. Each valve shall be installed with a gate box set vertically with top even with finished grade.

M. The existing water main pipe shall be cut using methods approved by the pipe manufacturer with the open pipe end prepared for installation of watertight cap or plug. If the condition of the existing pipe is such that a cap or plug cannot be installed, then the Contractor shall install a flexible coupling and capped filler piece. The Contractor shall close all valves on abandoned water mains and remove the upper sections of their valve boxes.

N. Wherever curves are negotiated by deflecting successive lengths of pipe, the deflection of each length of pipe shall not exceed three (3) degrees at any one joint. Consult manufacturer's literature for allowable deflection in inches for various pipe sizes and lengths to meet this requirement.

O. Installation of tapping sleeve and valve and tapping of existing water main shall be accomplished using equipment and procedures recommended by the manufacturer. The Contractor shall be responsible for preparing existing water mains for tapping by the City of Meriden Water. The Contractor must excavate, expose, and support the existing mains(s) and attach the tapping sleeve and valve in accordance with the manufacturer's recommendations and to the satisfaction of the Water Department. Water Department personnel shall perform the actual tap after which the Contractor shall furnish and install the valve box, back fill the work pit, and restore the pavement as specified elsewhere.

P. During trench-filling, install a continuous underground-type plastic line marker,

located directly over buried pipe at 36" below finished grade.

Q. Resetting water gates shall mean the minor adjustment (less than 1 vertical ft.) of existing curb stop and gate valve boxes to the proposed grade not involving major reconstruction of the unit. (Examples of adjusting are screwing/sliding adjustable type boxes up or down to bring the valve box to required grade or using approved extension pieces to bring valve boxes to required grades).

R. Adjust gate boxes equal to or greater than 1 vertical ft. shall mean the installation of portions or complete new gate boxes and stem extensions on an existing valve that is required to be re-aligned so that the valve boxes are set plumb and are centered on the valve-operating nut. Care must be taken to ensure no part of the riser section bears on any part of the valve.

Hydrostatic Testing

A. Tests for leakage shall be conducted on all portions of completed water pipelines and appurtenances and all methods and procedures for performing the testing of water mains shall be subject to the acceptance of the Engineer. Unless otherwise permitted, the testing shall be conducted with partial backfilling over the barrel of any new pipe, between new pipes, pipe fittings, valves, and appurtenances of the section. Interiors of all pipes shall be cleaned of all dirt and foreign materials. The water pipelines may be tested in convenient sections acceptable to the Engineer.

B. Testing of water mains shall conform to the requirements of Section 4 of the AWWA Specification C 600, latest revision, except as herein specified. The test pressure shall be a minimum of 200 psi or 50% above working pressure, whichever is greater, for at least a two-hour duration. Maximum allowable leakage shall be as specified for the appropriate pipe diameter. Test results shall be accurate to within 0.1 of a gallon.

C. Testing of water mains shall be performed by a third party hired by the Contractor and approved by the City at the Contractor's expense and witnessed by the Engineer. Notarized records of the test results shall be submitted by the Contractor to the Engineer. In case the specified rate of leakage for the portion of the pipeline being tested is exceeded, the Contractor shall find and repair the leaks and the pipelines shall be retested repeatedly if necessary, by the Contractor, until the required conditions are met, at no additional expense to the Owner.

ITEM #1301081A	ITEM #1302047A
ITEM #1301082A	ITEM #1302059A
ITEM #1301084A	ITEM #1302204A
ITEM #1302003A	ITEM #1302206A
ITEM #1302004A	ITEM #1302208A
ITEM #1302006A	ITEM #1302300A
	ITEM #1302301A

Disinfecting Water Mains and Appurtenances

A. All portions of completed water mains and appurtenances are to be disinfected before acceptance for operation by the City. In particular, the Contractor shall follow all of the disinfection procedures of Section 9 – Disinfection Procedures of AWWA Specification C 601, unless otherwise directed by the Engineer.

The Contractor shall be responsible for satisfactory disposal of all flushing water and chlorinated water at no additional expense to the Owner. The Contractor shall submit to the Engineer, the type of chlorine to be used, the disinfection experience for the workers, and the procedures and equipment to be used.

B. After the mains have been flushed clean, samples of the water contained in the mains shall be arranged by the Contractor to be taken for bacterial analysis by a testing laboratory certified in Connecticut. Only after the analyses of the samples are acceptable to the City shall the mains be made part of the system. In the event that positive reports of contamination are received, the Contractor shall flush and re-chlorinate the mains as many times as may be necessary to obtain acceptable results. Samples shall be obtained from corporation cocks with copper gooseneck assemblies installed as directed along the main to be disinfected. After samples have been collected, the gooseneck assembly may be removed and retained for future use.

C. The Contractor shall be warned the water main disinfection should be only accomplished by specially trained personnel and that the project's water mains are vital to the safety and well-being of the municipality. State Health Department approval of the water main disinfection is to be received by the Contractor in a timely manner so as to quickly place the water mains into service.

D. The Contractor shall submit an affidavit of compliance to the Engineer. The affidavit of compliance shall be the bacteriological test results certifying the water samples from the water main to be free of coliform bacteria contamination.

E. The Contractor's workers who are responsible for the water main work should be aware of the potential health hazards with chlorine and should be trained to observe carefully the prescribed construction practices and disinfection procedures. The effectiveness of disinfection depends in large measure on maintaining clean pipes and avoiding major contamination during construction.

F. The Contractor shall give thorough consideration to the impact of highly chlorinated water flushed to the receiving environment. If there is any question that damage may be caused by a chlorinated water discharge (to fish life, plant life, physical

installations, or other downstream water uses of any type), then an adequate amount of reducing agent should be applied by the Contractor to the water being disposed of to neutralize thoroughly the chlorine residual remaining in the water.

G. To prevent possible backflow or siphonage of contaminants into the water distribution system which is in service, the Contractor will be required to provide a reduced pressure backflow preventer (RPD) on the temporary piping which is supplying water from the distribution system to the water main being treated and to provide such other safety and control measures as directed by the City.

H. The Contractor shall be required to take samples and have testing performed by a certified testing laboratory for a minimum of the following items:

1. Total Coliform
2. Standard Plate Count
3. Gross Hydrocarbons
4. Volatile Organics

I. The Engineer shall take the required water samples after completion of flushing and disinfecting of the water main as directed by the Engineer. The Contractor shall be responsible for coordination and delivery of the samples to the certified testing laboratory. The Contractor shall bear the costs of all water quality testing and analysis expenses by the certified laboratory.

Method of Measurement

A. Ductile iron pipe for water mains shall be measured for payment by the linear foot for each size as measured along the axis of the pipe from the face of the hub forming the beginning of the work to the hub or spigot constituting the end of the line, measured through all fittings and valves in the line. Pipe for side street connections shall be measured from the centerline of the cross or tee to the point of connection to existing pipe.

B. Flexible couplings, transition couplings, crosses, tees, reducers, bends, anchor couplings, joint restraints, thrust blocks will not be measured separately for payment, the cost of which shall be included in the price bid per linear foot for furnishing and installing the various sizes of ductile iron pipe for water mains.

ITEM #1301081A	ITEM #1302047A
ITEM #1301082A	ITEM #1302059A
ITEM #1301084A	ITEM #1302204A
ITEM #1302003A	ITEM #1302206A
ITEM #1302004A	ITEM #1302208A
ITEM #1302006A	ITEM #1302300A
	ITEM #1302301A

C. Pipe for new hydrant branches shall be measured from the centerline of the hydrant tee to the connection to the hydrant assembly. Pipe for hydrant branch extension shall be measured for payment from the existing hydrant branch pipe joint to the connection to the hydrant assembly.

D. Gate valves will be measured for payment by the unit of the particular size in place and accepted, including valve box.

E. Resetting Gate Boxes will be measured for payment by the unit that is adjusted in place and accepted.

1. Regardless of the Contractor's operations requiring the gate box at each location to be reset more than once, each Reset Gate Box shall only be paid for once.

F. Adjust Gate Boxes, > 1ft., will be measured for payment by the unit that are complete in place, measured and accepted.

1. Regardless of the Contractor's operations requiring the gate box at each location to be adjusted more than once, each Adjust Gate Box shall only be paid for once.

G. Tapping sleeve and valves will be measured for payment by the unit of the particular size in place and accepted, including valve box.

H. Testing, flushing and disinfection of new water mains and appurtenances will not be measured for payment.

I. Maintaining temporary service connections and providing temporary water will not be measured for payment.

Basis of Payment

A. Ductile iron pipe for water mains of various sizes measured in place as provided above, shall be paid for at the respective contract unit prices bid, per linear foot, which payment shall constitute full compensation for furnishing and installing all pipe, fittings and appurtenances, including trench excavation and backfill, impervious trench dam, gravel fill, temporary pavement restoration, warning tape, joint restraints, thrust blocks, dewatering, support systems, hydrostatic testing and disinfecting and all other costs incidental and necessary to complete the work as specified, as indicated and as directed by the Engineer.

ITEM #1301081A	ITEM #1302047A
ITEM #1301082A	ITEM #1302059A
ITEM #1301084A	ITEM #1302204A
ITEM #1302003A	ITEM #1302206A
ITEM #1302004A	ITEM #1302208A
ITEM #1302006A	ITEM #1302300A
	ITEM #1302301A

B. Gate valves including valve boxes and masonry units shall be paid for at the contract unit price per each of the particular size, which shall constitute full compensation for furnishing and installing all gate valves and valve boxes including trench excavation and backfill, gravel fill, temporary pavement restoration, hydrostatic testing and disinfection.

C. Reset Gate Boxes shall be paid for at the contact unit price per each, which shall constitute full compensation for making adjustments to grade, excavation, backfilling, materials, and labor incidental to the work.

D. Adjust Gate Boxes shall be paid for at the contact unit price per each, which shall constitute full compensation for making adjustments to grade, excavation, backfilling, materials, and labor incidental to the work.

E. Maintaining temporary service, connections, installation of insulation, and plugging and abandoning water mains shall not be paid for separately.

F. Tapping sleeves and valves shall be paid for at the contract price for each of the particular size, which shall constitute full compensation for furnishing and installing, support, trench excavation and backfill, gravel fill, temporary pavement restoration, hydrostatic testing, and disinfecting. The contractor is responsible for all tapping and testing fees.

G. No separate payment will be made for flushing, testing and disinfection of water mains and related work. Compensation for such work as required shall be considered to be included in the contract prices bid for other water main items.

Pay Item	Pay Unit
6” Ductile Iron Pipe (Water Main)	LF
8” Ductile Iron Pipe (Water Main)	LF
10” Ductile Iron Pipe (Water Main)	LF
6” Gate Valve (Water Main)	EA
8” Gate Valve (Water Main)	EA
10” Gate Valve (Water Main)	EA
Reset Gate Box (Water Main)	EA
Adjust Gate Box (Water Main)	EA
6” x 6” Tapping Sleeve and Valve (Water Main)	EA
8” x 8” Tapping Sleeve and Valve (Water Main)	EA
10” x 10” Tapping Sleeve and Valve (Water Main)	EA
10” Connection to Hanover Street	EA
8” Connection to Cherry Street	EA

ITEM #1301081A
ITEM #1301082A
ITEM #1301084A
ITEM #1302003A
ITEM #1302004A
ITEM #1302006A
ITEM #1302047A
ITEM #1302059A
ITEM #1302204A
ITEM #1302206A
ITEM #1302208A
ITEM #1302300A
ITEM #1302301A

ITEM #1301658A –10" DUCTILE IRON PIPE INSTALL ON BRIDGE (WATER MAIN)

Description:

The Contractor shall furnish and install ductile iron pipe of the sizes indicated, and all the fittings and appurtenances to the lines and grades shown on the Contract Drawings, complete as shown, specified or directed, including but not limited to; pressure reducing valves, bends, concrete expansion sleeves, restraints, blow off assemblies, gate/butterfly valves, air valves, sterilization fittings, tapping sleeves, tapping gates, gate boxes, tees, thrust blocks and anchors, polyurethane foam insulation and HDPE insulation sleeve, casing pipe, transporting materials, digging test pits, the clearing, trenching, disposing of unused excavated materials, furnishing installing and field testing the pipelines complete with lacings and harnessing, concrete anchor/thrust blocks and utility identification tape, all trenching, rock removal, refilling trenches, filter fabric, furnishing additional material for refilling, trench compaction/testing, miscellaneous grading, sheeting, bracing, pumping and all incidental work where required, and coring of the concrete backwall to the specifications and details of the District, except as otherwise herein provided for.

The cost of all necessary supports, hardware and appurtenant work for the support of the water main on the bridge shall be covered under Item #1300061A – WATER MAIN SUPPORT SYSTEM.

Reference to "OWNER" in this Item refers to "City of Meriden".

Materials:

All materials used shall be from manufacturers and models as specified in the Owner's Approved Materials List unless otherwise approved by the Engineer.

Ductile Iron Pipe - Submittals: Submit the manufacturer's literature and/or shop drawings for the materials of this section shall be submitted for approval. The Contractor shall furnish detailed drawings as follows and no work shall be fabricated until they have been approved by the Engineer:

1. Dimensions and general details for typical length of pipe.

2. Detail of joint between pipes for both push-on and restrained joints together with installation instructions.

3. Dimensions and general details for all fittings including joint details for both mechanical and restrained joints.

4. Location plans or lists showing number of pipes and fittings and other such information as needed for installation.

Prior to pipe-laying, the Contractor shall dig test pits where the new pipe connects to the present water main to ascertain the location, elevation and cross-sectional dimensions of the present mains.

Pipe Specifications: All ductile iron pipe with push-on joints shall be the 60-42-10 grade cast in revolving molds in full accord with the following American National Standard, except for details for the joints and other modifications stated herein: "Ductile Iron Pipe, Centrifugally Cast in Metal Molds or Sand-Lined Molds, for Water or Other Liquids".

ANSI/AWWA C151/A 21.51, furnished in 18-foot or 20-foot lengths. Push-on joints for such pipe shall be in accordance with ANSI/AWWA C111/A 21.11.

All requirements of the American National Standards Institute Specifications will be rigidly enforced and the foundry shall submit regularly to the Engineer, single copies of the report of tensile tests and low temperature impact tests as required in Section 51-12 and 51-13 of the ANSI/AWWA C151/A 21.51.

The Contractor shall submit to the Engineer a certified statement that the inspection and all of the specified tests have been made and met as required in Section 511.4.2 of ANSI/AWWA C151/ A21.51.

The ductile iron pipe to be furnished under this Contract shall conform to the following dimensions:

Size (Inches)	Thickness (Class)	Insulation
10	54	2.21"

Where shown, specified or ordered, the pipe shall have push-on joints of the type which employs a single elongated, grooved rubber gasket to affect a watertight joint seal. The joints shall conform to the latest American National Standard for "Rubber Gasket Joints for Ductile Iron and Gray Iron Pressure Pipe and Fittings", ANSI/AWWA C111/A21.11, except as otherwise specified herein. The rubber gaskets shall be manufactured from high quality rubber satisfactory to the Engineer and shall be similar to the gaskets used in the Tyton joint as manufactured by the United States Pipe and Foundry Company or the Fastite joint as manufactured by the American Cast Iron Pipe Company or the Grip-Tite joint as manufactured by Griffin Pipe Products Co. or approved equal.

Where shown, specified or ordered, the pipe shall have restrained joints of a type which employs a single elongated, rubber gasket to affect a watertight joint seal. The joints shall conform in general to ANSI/AWWA C111/A21.11. The rubber gaskets shall be manufactured from high quality rubber satisfactory to the Engineer. The restrained joint pipe shall be as manufactured by the American Cast Iron Pipe Company, McWane, Super Lock, TR Flex, or approved equal.

The grooved rubber gaskets and joint lubricant shall be furnished with the pipe and shall be considered included in the price bid per linear feet of pipe. The gasket shall be plainly identified as to pipe size and packaged in a suitable and satisfactory manner for shipment.

Each pipe shall have cast or stamped designation of the maker's name or mark, the year in which the pipe is cast, and the letters "DI" or "DUCTILE" as required by the American National Standards Institute Specifications. The weight and thickness class shall be painted on each pipe,

as required by the American National Standards Institute Specifications, and a record of weight for each pipe before the application of a lining or coating shall be submitted to the Engineer.

Fitting Specifications: All ductile iron fittings to be furnished under this Contract shall conform to the American National Standard for "Ductile-Iron and Gray-Iron Fittings, 3-inch through 48-inch, for Water and other Liquids", ANSI/AWWA C110/A21.10. In addition to the marking required by the American National Standards Institute Specifications, the year of casting shall be cast on all fittings. Single copies of the results of tests required by the ANSI/AWWA C110-A21.10 shall be submitted to the Engineer.

Bolt holes in the mechanical joint bells of all fittings shall straddle the vertical centerline of the fitting (fitting laying in horizontal position).

Unless otherwise shown, specified, or ordered, all fittings shall be mechanical joint (MJ).

Joint Accessories: All joint accessories shall be furnished with each pipe and fitting and shall be plainly identified as to pipe size. A certified statement that all required tests on the joint accessories have been made and met as specified shall be submitted to the Engineer.

Lining and Coating: All pipe and fittings, except sleeves, caps and plugs shall be lined with cement mortar in accord with the American National Standard for "Cement Mortar Lining for Ductile-Iron Pipe and Fittings for Water", ANSI/AWWA C104/A21.4. However, linings with thickness twice those specified in Section 4-10.1 shall be furnished. Thickness determinations, in accord with Section 4-9, shall be made on at least one fitting of each type.

All pipe and fittings, including steel sleeves, caps, plugs, tees, bends and reducers, shall be coated inside and outside with an approved bituminous material, neither sufficiently soft to flow when exposed to the summer sun, nor brittle enough to crack and scale off when exposed to temperatures below freezing.

Coating may be applied by painting, dipping or spraying, but in no case are the pipe fittings or the coating material to be heated to a high enough temperature to be detrimental to the cement lining. In addition, the coating of the interior shall conform to the requirements of ANSI/AWWA C104/A21.1.

The Contractor shall submit to the Engineer a certified statement that the inspection and all of the specified tests have been made and met.

THE FOLLOWING ARE ACCEPTABLE PIPE MANUFACTURERS:

Atlantic States Pipe (McWane)
United States Pipe & Foundry Co.
Griffin Pipe Products, Inc.
Clow Corp. (McWane)
ACIPCO

Inspection: All pipe and fittings shall be subject to inspection by the Engineer after delivery to the job site and may also be subject to inspection at the foundry by a representative of the District.
Harnessing Specifications: Eyebolts and lacing rods shall be of A-36 steel as manufactured by Star National Products, Columbus, Ohio or approved equal. All components shall be hot -dipped galvanized.

Retainer glands for mechanical joints shall conform to ANSI/AWWA C111/A21.11 and the following additional requirements:

1. All retainer glands shall be ductile iron and all retaining devices shall be heat treated ductile iron.

2. All retainer glands shall have a minimum rated working pressure of250 psi.

The retainer glands shall be Megalug Series 1100 as manufactured by EBAA Iron Sales, Inc. Eastland, Texas or approved equal.

Components of the harnessing system for push-on joint ductile iron pipe shall be in general accord with the above requirements for lacing rods and retainer glands. The harnessing system shall be the Series 1700 Megalug Restraint Harness, as manufactured by EBAA Iron Sales, Inc., Eastland, Texas or approved equal.

Flexible Expansion Joint: Flexible expansion joint installed at concrete sleeves at either abutment shall consist of an expansion joint designed and cast as an integral part of a ball and socket type flexible joint, having a minimum per ball deflection of: 20º, (2” - 12” diameters), 15º, (14” - 36” diameters); and 12º, (42”-48” diameters). Two ball and sockets are required. Linear expansion shall not be less than 6-inches minimum. Flexible expansion joint shall be provided with flanged end connections conforming to ANSI/ AWWA C111/A21.11.

Flexible expansion joint shall be pressure tested prior to shipment against its own restraint to a minimum of 250 psi. A minimum 2:1 safety factor, determined from the published pressure rating, shall apply.

All internal surfaces and external surfaces shall be coated with a fusion bonded epoxy coating conforming to the requirements of AWWA C213. Interior surface holiday testing shall be performed.

Flexible expansion joints shall be manufactured by EBAA Iron, Inc., Eastland TX or approved equal.

Joint gaskets: Shall be Nitrile (NBR) (Acrylonitrile Butadiene). Gaskets for flanged joints shall be full face Flange-Tyte as manufactured by U.S. Pipe.

Bolts, nuts, and fastening hardware: Type 316L stainless steel, hex head conforming to ASTM F593 or ASTM F594 as applicable. Threads shall be coated with Never-Seez anti-seize and lubricating compound as manufactured by Bostik, Inc.

Adjustable Pipe Roll Stands: The pipe support rollers will be sized to support the 10" ductile iron pipe with provided insulation and protection saddles. Provide cast iron base plate and stand roll with steel adjusting screws. Provide resilient coating. Comply with ANSI/MSS SP-69 and MSS SP-58. Size roller assembly to accommodate pipe insulation and protection saddles. Provide dielectric insulation pads between dissimilar metals. The roller assembly shall provide for a vertical adjustment of at least 6 inches. Adjustment will be provided at two adjustable sockets. All components of the support rollers, including nuts, washers, rods, rollers, etc. shall be hot-dip galvanized in accordance with ASTM A153. The general dimensions of the roller shall be as shown on the Plans. The adjustable utility support system shall be as manufactured PHD Manufacturing, Inc. figure 480 or approved equal.

Joint Accessories: All joint accessories shall be furnished with each pipe and fitting and shall be plainly identified as to pipe size. A certified statement that all required tests on the joint accessories have been made and met as specified shall be submitted to the Engineer.

The Contractor shall submit to the Engineer a certified statement that the inspection and all of the specified tests have been made and met.

Inspection: All pipe and fittings shall be subject to inspection by the Engineer after delivery to the job site and may also be subject to inspection at the foundry by a representative of the OWNER.

Retainer glands for mechanical joints shall conform to ANSI/AWWA C111/A21.11 and the following additional requirements:

1. All retainer glands shall be ductile iron and all retaining devices shall be heat treated ductile iron.

2. All retainer glands shall have a minimum rated working pressure of250 psi.

The retainer glands shall be Megalug Series 2000PV as manufactured by EBAA Iron Sales, Inc. Eastland, Texas or approved equal.

Trench Refill: Trench refill materials shall meet the following requirements:

Native Backfill: Native backfill shall consist of granular soil excavated on site meeting the approval of the Engineer. Materials shall be of such a nature that they will form a stable dense fill. Materials shall not contain stones larger than 6-inch, vegetation, masses of roots, individual roots more than 12-feet long or more than ½-inch in diameter, trash, clays, or plastic fines. Organic matter shall not exceed two percent (2%). Non-plastic fines (silts) shall not exceed 20 percent (20%).

Bank Gravel: Bank gravel shall conform to the requirements of Article M.02.01-2, CDOT Form 818.

Crushed Stone: Crushed stone shall conform to the requirements of Article M.02.01-1 Grading A, CDOT Form 818 and Sub article M.02.02-2(a), CDOT Form 818, for loss on abrasion.

Granular Base: Granular base shall conform to the requirements of Article M.02.03, Grading "C", CTDOT Form 818.

Sand: Sand shall conform to the requirements of Sub article M.11.04c, CDOT Form 818.

Utility Identification Tape: Utility identification tape shall be 4-inch wide non-detectable, designed to withstand extended underground exposure, colored blue and be durably imprinted with an appropriate warning indicating the presence of the buried pipe.

Gate Valve, Extension Stem and Gate Box: Refer to Owner's/Project Details.
Concrete anchor/ Thrust blocks: Anchors and thrust blocks shall be Class PCC003340 concrete conforming to Article M.03.01.

Harnessing: Refer to Owner's/Project Detail.

Filter fabric: Fabric shall conform to Article M.08.01-26.

Expansion fittings shall be as manufactured by EBAA Iron EX-TEND 200 or approved equal

Insulation/Insulation Casing: The insulation shall be a foamed in place closed cell polyurethane which completely fills the annular space between the carrier pipe and the exterior casing. The exterior casing shall be:

1. Seamless, extruded white PVC Type 1, Grade 1, Class 12454-B per ASTM D-1784 or
2. Seamless, High Density Polyethylene (H.D.P.E.) ASTM D-1248 with the following physical properties:
   ASTM D-638……Ultimate Elongation 850%
   ASTM D-638…….Tensile Yield Strength 3300 psi
   ASTM D-3350……..Resin Type III, Grade P34
   ASTM D-790……..Tangent Flexural Modules 175,000 psi

Construction Methods:

Transporting and Distributing Pipe: The Contractor shall transport the pipe and fittings from the place of manufacture, shall secure all permits which may be necessary, and comply with the requirements of the Connecticut Bureau of Highways, Cities and Towns, concerning heavy transporting over State, City and Town highways.

During loading, transportation and unloading, more than ordinary care shall be taken to prevent injury to the pipes. Such work shall be done with each section of the pipe under full control at all times and under no condition shall a pipe be dropped on the ground. Pipes shall be placed on sand beds or other methods may be employed to avoid chances of pipe being frozen to the ground surface.

In distributing the pipe in the field, as permitted, each piece shall be placed as near as possible to the point where it is to be installed and faced in the proper direction. In case any pipe received damage from handling or other cause and made unacceptable to the Engineer, it shall be replaced with a new pipe at the expense of the Contractor. The Contractor is cautioned that State, City, or Town authorities may not permit storing pipe, etc., within street or highway limits.

Clearing Trees and Bushes: No trees within streets and highways, or adjacent to the normal trench therein, shall be damaged or removed. In streets and highways where there is no permanent paving, the Contractor shall, unless otherwise directed, remove and dispose of only those trees, bushes or shrubs required for construction and approved by the Engineer. The unlimited removal of trees and brush will generally not be required or permitted. All trees, bushes or shrubs which are not to be removed shall be preserved and protected by the Contractor. Should any trees, bushes or shrubs, which are to be preserved and protected, become damaged by the conduct of the work, the Contractor shall replace them at his own expense. Brush, small branches, trash, large trunks, stumps and all other surplus material and debris shall be removed from the site of the work.

Bridge Installation: Pipes shall be cut to length and carefully installed to insure proper positioning of a single joint between pipe support assemblies. Pipe should be installed after hangers are installed, without the need for temporary supports. Pipes may be launched from the trench behind the abutment through the backwall opening and across the hanger rollers.

Trenching: Prior to any excavation, the Contractor shall notify all affected utilities in accord with Public Act 77-350 (CALL BEFORE YOU DIG 1-800-922-4455).

The trench for the pipe shall be 18-inches beyond the outside of the barrel of the pipe on each side, the top of the barrel of the pipe shall be as shown on the Contract Drawings or as directed by the Engineer; and the bottom of the trench shall be at the bottom of the pipe. The Contractor alone shall be responsible for the stability and safety of the trenches and adjacent structures and shall use such trench support and bracing as necessary without additional payment therefor. Pavement cuts shall be made with the edges reasonably smooth and without cracking or damage to the pavement outside the limits of the portion excavated. The methods used and the location of such cuts shall conform to the requirements and specifications of the City or State. Repairs to pavement shall be made in accordance with the requirements and specifications of the City/Town or State.

In any area to receive fill, no pipe trench shall be excavated until the fill has been placed and compacted to a level at least 3-feet above the top of the pipe to be installed.

The Contractor may be required to excavate locally to determine the location and depth of existing underground structures on the lines of the pipe well in advance of the pipe laying. There will be no additional payment for this work, including backfilling and temporary surfacing.

Sheeting, Bracing and Pumping: The Contractor shall furnish and put in place such sheeting and bracing as may be necessary, to support the sides of the excavation, to prevent undermining of the pavement or to protect from possible injury any pipes, sewers, ducts, poles, conduits or other structures existing in the streets, or highways, and shall remove such sheeting and bracing as the trench is refilled unless the Engineer shall order it left in place.

The Contractor shall maintain all excavations in proper condition for carrying on the work, and to this end shall do all bailing, draining, or pumping which may be necessary to keep the trenches or other excavations free of water. No direct payment will be made for this work but the cost thereof will be considered as having been included in the price bid per linear feet of pipe.

If the Contractor installs and operates wellpoints on any section of the work, the expense of the same shall be borne by the Contractor.

Protection of Pipes, Drains, Culverts, etc.: All existing gas pipes, water pipes, sewers, drains, manholes, catch basins, culverts, electrical conduits, telephone ducts, utility poles or other structures which are uncovered by the excavation, and which do not, in the opinion of the Engineer, require to be changed in location, shall be carefully supported and protected from injury by the Contractor; and in case of damage, they shall be restored by him without compensation; therefore, to as good condition as that in which they were found and shall be kept in repair during the existence of this Contract.

Laying Ductile Iron Pipe: Proper and suitable tools and appliances for safe and convenient handling and laying of pipe shall be used, and care shall be taken to prevent the coating of the pipe from being damaged, particularly on the inside of the pipes. The Contractor shall not start any pipe work until he has satisfied the Engineer that he has on hand and available the following minimum equipment:

1. Wheel pipe cutters, hydraulic pipe cutter or a pipe saw for the sizes of pipe to be laid;

2. Ratchet type socket wrenches for mechanical joint bolts and nuts;

3. At least two expandable pipe stops of the proper size for closing the end of the pipe being laid when not actually laying pipe.

All pipes shall be carefully examined for defects and no pipe or other casting shall be laid which is known to be defective, and should any defective pipe or other casting be discovered after being laid, it shall be removed and replaced with a sound casting at the expense of the Contractor.

Pipe located on the bridges shall be carefully cut to length and carefully installed to insure proper positioning of joints between pipe support assemblies.

The pipe shall be laid upon sound soil, cut true and even so that the barrel of the pipe will have a bearing for its full length. In the event the trench is excavated below the grade of the bottom of the pipe, the trench will be brought up to grade with acceptable crushed stone or processed gravel, pneumatically tamped, at the expense of the Contractor, before the pipe is laid.

The utility identification tape shall be place approximately two (2) feet above the top of the pipe.

When not actually laying pipe (e.g. overnight, weekends, holidays, etc.) the open ends of the pipe shall be kept plugged with approved watertight night caps furnished by the Contractor.

The Contractor shall take all necessary precautions to prevent water from entering the pipe during installation of the pipeline.

Unless shown otherwise on the Contract Drawings or directed otherwise by the Engineer, the pipeline shall be installed a minimum of four (4) feet - six (6) inches below finished grade. The pipeline shall also be installed to provide at least eighteen (18) inches of vertical clearance between the water pipe and storm drains or sanitary sewers.

Cutting Pipe: Whenever the pipes require cutting, an approved saw, wheel, or hydraulic type cutter shall be used. This work shall be done by the Contractor in accordance with the pipe manufacturer's requirements without extra compensation, in a manner satisfactory to the Engineer, and only experienced men shall be engaged thereon. Installation of field weldments on field cut pipe shall be performed in accordance with the manufacturer's requirements.

Joints: Joints for restrained joint pipe shall be assembled in accordance with the manufacturer's requirements.

On fittings, butterfly and gate valves with mechanical joints, retaining glands shall be installed in lieu of the standard mechanical joint gland to provide joint restraint. The retainer glands shall be Megalug Series 1100 as manufactured by EBAA Iron Sales, Inc. Eastland, Texas or approved equal. The retaining gland and rubber gaskets shall be placed on the plain end of the pipe being (or previously) laid and entered into the socket of the fitting. The gasket shall then be evenly seated in the socket, the retaining gland moved up to the face of the gasket and the "T" bolts inserted and made finger tight. The "T" bolts shall then be tightened with a ratchet or torque wrench to between 60 and 80 foot-pounds. Only then shall the set screws be tightened to a maximum of 70 foot-pounds, tightening 180 degrees apart and making a final check with the wrench to ascertain that all set screws have 70 foot-pounds. The joint is then complete. Torque settings shall be done with the pipe laid in the trench in place.

Other special lacing or harnessing, if shown on the Contract Drawings, or directed by the Engineer shall be installed by the Contractor to the satisfaction of the Engineer.

Refilling Trenches: As soon as practicable after the pipes have been laid, the trenches shall be refilled at least to a level 2-feet above the top of the pipe with approved gravel, deposited in layers no more than 6-inchs in depth and satisfactorily compacted with pneumatic hand tampers, each layer to be leveled and thoroughly compacted to the satisfaction of the Engineer before the next layer is deposited. There will be no additional payment for necessary borrow to refill to this level. Special care shall be taken to consolidate the gravel under the pipes and the whole work of refilling shall be done in a manner which will prevent subsequent settlement and injury to the pipe. Above this level except for the surfacing material, the Contractor may use approved material from the trench excavation.

Trench Backfill: Backfill above the 24-inch level will comply with and be paid for under the appropriate items included in this Contract.

Frost in Trench or Refill: Every effort shall be extended to eliminate the presence of frost in the bottom and sides of the trench and refill material. The Contractor shall cover and heat the trench or take such other means as necessary to eliminate the frost and chance of subsequent pipe settlement.

Disinfecting and Flushing Water Mains

All bridge mounted water mains shall be disinfected and flushed prior to its placement in service. The procedure and cost for the testing and disinfecting shall occur simultaneously with the larger under road system, and paid for under the item for the corresponding roadway item.

PREVENTATIVE AND CORRECTIVE MEASURES DURING CONSTRUCTION. Heavy particles generally harbor bacteria and prevent elevated chlorine concentrations from contacting and killing these organisms. The procedures of this specification must be observed to assure that a water main and its appurtenances have been thoroughly cleaned for the final disinfection by chlorination. Also, any connection of a new water main to the active distribution system prior to the receipt of satisfactory physical and bacteriological sample results may constitute a cross-connection. Therefore, new water mains must be isolated until physical and bacteriological tests, immediately after and 24 hours following flushing of the water main, are satisfactorily completed and meeting Owner's specifications.

A successful disinfection process begins at the early stages of construction. The Contractor must protect piping systems from contamination including interiors of pipes, fittings and valves. Pipe and appurtenances delivered for construction shall be capped or bagged to minimize the entrance of foreign material. All openings in the pipeline shall be closed with watertight plugs when pipe laying is stopped at the close of the day's work or for other reasons, such as rest breaks or meal periods. Rodent-proof plugs may be used when watertight plugs are not practicable and when thorough cleaning will be performed by flushing or other means. The sanitary handling of materials, the practices during construction, and the continual inspection of the work are the primary means for ensuring the sanitary condition of the water main.

Delay in placement of delivered pipe invites contamination. The more closely the rate of delivery is correlated to the rate of pipe laying, the lower the risk of contamination.

JOINTS. Joints of all pipes in the trench shall be completed before work is stopped. If water accumulates in the trench, the plugs shall remain in place until the trench is dry.

SEALING MATERIALS. No contaminated material or any material capable of supporting prolific growth of microorganisms shall be used for sealing joints. Sealing material or gaskets shall be handled in a manner that avoids contamination. The lubricant used in the installation of sealing gaskets shall be suitable for use in potable water and approved by the pipe manufacturer, and not contribute odors. It shall be delivered to the job in closed containers and shall be kept clean and applied with dedicated, clean applicator brushes.

CLEANING AND SWABBING. Each pipe section that is being readied for assembly in the field and just prior to installation, shall have the interior pipe surface swabbed with a 1% to 5% hypochlorite disinfecting solution using mechanical means like pulling a chlorine soaked mop or pigging device through the pipe or by power washing . If in the opinion of the Engineer, any dirt enters the pipe while being installed, the pipe will be swabbed again with 1% to 5%. The cleaning method used shall not force mud or debris into the interior pipe-joint spaces and shall be acceptable to the Engineer.

WET TRENCH CONSTRUCTION. If it is not possible to keep the pipe and fittings dry during installation, the water that may enter the pipe-joint spaces shall contain an available chlorine concentration of approximately 25 mg/L. This may be accomplished by adding calcium hypochlorite granules or tablets to each length of the pipe before it is lowered into a wet trench or by treating the trench water with hypochlorite tablets.

FLOODING BY STORM OR ACCIDENT DURING CONSTRUCTION. If the main is flooded during construction, it shall be cleared of the floodwater by draining and flushing with potable water until the main is clean. The section exposed to the floodwater shall then be filled with chlorinated potable water that, at the end of a 24-hour holding period, will have a free chlorine residual of not less than 25 mg/L. The chlorinated water may then be drained or flushed from the main.

12-Inch and Smaller Gate Valves: Blow-Off Assembly:

Quality Assurance: All gate valves, accessories and gate boxes shall be inspected and tested at the foundry as required by the standard specifications to which the material is manufactured.

A certified statement that inspection and all of the specified tests have been made and met shall also be submitted.

All gate valves, accessories and gate boxes shall be subject to inspection by the Engineer after delivery to the job site and may also be subject to inspection at the foundry by a representative of the OWNER.

In addition, the OWNER reserves the right to have any or all materials inspected and/or tested by an independent service at either the manufacturer's plant or elsewhere. Such inspection and/or tests shall be at the OWNER 's expense.

A certified statement that inspection and all of the specified tests have been made and met shall also be submitted.

Gate Valve: The gate valve shall conform to ANSI/AWWA C500, ANSI/AWWA C509 and the following additional requirements:

1. Valve shall be double disc or resilient seated.

2. Bolts and nuts for connecting O-ring seal plates and bonnet to body shall either be copper-silicon alloy or stainless steel.

3. Valve shall be furnished with O-ring seals utilizing two O-rings, consistent with appropriate specifications.

4. Valve shall have mechanical joint ends, unless otherwise specifically indicated, which shall conform to ANSI/AWWA C111/A21.11. All joint accessories shall be furnished with each valve.

5. Direction to open shall be right-hand.

6. Operating nut shall be 2" square.

Gate Valve Box: The gate valve box shall conform to the following requirements:

1. Cast iron shall conform to ASTM A48, Class 25.

2. Top section shall be of the top flange design and shall have no bead on the bottom.

3. The word "WATER" shall be cast with raised letters in the center of the cover.

4. Base section shall be of the Dwyer design which centers the operating nut for positive access to the valve.

5. For specific gate box details, see the OWNER Details.

Extension Stem: The extension stem shall be fabricated from steel conforming to ASTM A 36. Galvanizing shall conform to the latest edition of ASTM A 123.

Inspection Before Installation: The gate valve, gate box, etc. shall be subject to a careful inspection before being installed. The valve shall be run through a full open-close cycle to insure proper operation.

Installation of Gate Valve: The gate valve shall be installed according to the details shown and to the satisfaction of the Engineer.

All debris and foreign material shall be cleared from valve openings and seats. All mechanisms shall be checked and all nuts and bolts checked for tightness.

The valve box shall be set plumb and centered directly over the operating nut of the valves. Earth fill shall be carefully tamped around the valve box to a distance of 4 feet on all sides of the box or to the undisturbed trench face, if less than 4 feet.

Where and as shown on the Contract Drawings, or ordered, a valve extension stem shall be installed. An extension stem will be ordered when the valve-operating nut is more than 4.5 feet below finished grade.

Excavation and refill shall conform to the requirements under other applicable Contract Sections.

Quality Assurance: All blow-off assemblies including gate valves and fittings shall be inspected and tested at the foundry as required by the standard specifications to which the material is manufactured.

All blow-off assemblies including valves and fittings shall be subject to inspection by the Engineer after delivery to the job site and may also be subject to inspection at the foundry by a representative of the OWNER.

In addition, the OWNER reserves the right to have any or all blow-off assemblies including valves, fittings and special castings inspected and/or tested by an independent service at either the manufacturer's plant or elsewhere. Such inspection and/or the tests shall be at the OWNER 's expense.

A certified statement that inspection and all of the specified tests have been made and met shall also be submitted.

Inspection Before Installation: Blow-off assemblies including gate valves, pipe, fittings, gate boxes, etc. shall be subject to a careful inspection before being installed. Valves shall be run through a full open-close cycle to insure proper operation.

Installation of Blow-off Assemblies: Blow-off assemblies including piping, gate valves, fittings, etc. shall be installed according to the details shown and to the satisfaction of the Engineer.

All debris and foreign material shall be cleared from valve openings. The blow-off assembly shall be set plumb. Blow-off assemblies and connecting pipe shall have at least the same depth of cover as the distributing main.

Special trench refill shall be placed over the pipe and fittings from the bottom of the trench to 2 feet above the top of the pipe and fittings.

Ductile iron pipe and harnessing shall be installed in accord with the specifications.

The utility identification tape shall be placed approximately two (2) feet above the top of the pipe. Gate valves and gate boxes shall be installed in accord with the specifications. Three-quarter inch (3/4") crushed stone, special trench refill and concrete shall be placed in accord with the specifications.

Excavation and refill shall conform to the requirements under other applicable Contract Sections. Temporary and permanent paved and unpaved surface restoration shall conform to the requirements under other applicable Contract Sections.

Method of Measurement:

This work will be measured for payment as follows:

"FURNISHING AND INSTALLING 10" WATER MAIN ON BRIDGE", which is considered to be the portion of pipe supported on the bridge. No measurement shall be taken as the work shall be paid for on a Lump Sum basis. For payment limits, the change between buried installation and installation on the bridge shall be considered to occur at the back face (roadway approach side) of the concrete thrust block.

Gravel fill from the bottom of the trench to the level 24-inches above the top of the pipe will not be measured for payment but will be included in the cost of the pipe.

Basis of Payment:

This work will be paid for at the contract lump sum price for "10" DUCTILE IRON PIPE INSTALLED ON BRIDGE (WATER MAIN)", complete and in place. The price shall also include the cost of digging test pits; transporting the materials; clearing, trenching; disposing of excavated materials, removing and disposing of the present water pipes and any appurtenances as needed; furnishing and installing the pipelines complete as shown on plans or as directed, with lacing and harnessing where required, including fittings, pressure reducing valves, bends, concrete expansion sleeves, restraint, filter fabric, bank gravel, sand, blow off assemblies, gate/butterfly valves, air valves, sterilization fittings, tapping sleeves, tapping gates, RCP sleeve, gate boxes, tees, thrust blocks, anchors, expansion fittings, utility identification tape refilling trenches; furnishing the additional materials; temporary and permanent resurfacing; grading; sheeting; bracing; pumping and all incidental work, except as otherwise herein provided for. No claim will be allowed because the number of pipes and joints may be greater than estimated by the Contractor. The price shall also include all material, transportation, concrete coring at the abutments, and labor including labor required to assist the Owner during the testing, and equipment necessary to construct the pipelines in accord with the Contract Drawings, the Specifications and the requirements of the Engineer there under.

The cost of all excavation, disposing of excavated material, except that which is suitable for refilling, and furnishing other materials for refilling, unless otherwise specified, will be considered as having been included in the lump sum price.

The cost of temporary surface restoration shall be covered under this item. The cost of the all necessary structural steel supports, hardware and appurtenant work for the support of the water main on the bridge shall be covered under Item #1300061 – WATER MAIN SUPPORT SYSTEM.

No direct payment will be made for any work done or materials used in making the pipeline tight.

Pay Item	Pay Unit
10” Ductile Iron Pipe Installed On Bridge (Water Main)	LF

ITEM # 1302931A WATER MAIN INSULATION - COVER (WATER MAIN)
ITEM # 1302932A WATER MAIN INSULATION - UTILITY CONFLICT (WATER MAIN)

Description

The work under this item includes the installation of rigid foam insulation to protect water pipes due to the following conditions: on the existing water pipes where the finished ground level has been lowered and the resultant cover is less than 42 inches; and where existing water pipes installed four feet or greater below finished ground level pass above or below a structure that may be a cold air source such as a culvert. The general locations of the work are indicated on the contract drawings.

Materials

The insulation shall be Pittsburgh Corning Foamglas or approved equal meeting ASTM c-552 with a compressive strength of 90 psi. Vapor Barrier, where required, shall be Pittcote 300 or approved equal. All other materials furnished and used in this work shall conform to the requirements of Form 816.

Construction Methods

A. Excavation for watermain shall conform to the Section 2.86 Drainage Trench Excavation.

B. Cover - For existing water pipes where the finished ground level has been lowered and the resultant cover is less than 42 inches, trenches shall be dug to the required depth on both sides of the water main at the required spacing. Material shall be placed in accordance with Contract Detail and manufacturers recommendations. Contractor shall maintain a minimum 3 inch clearance from the insulation to the water main on all sides. No excavation under the water main is permitted.

C. Utility Conflict - For existing water pipes installed four feet or greater below finished ground level that pass with 18” above or below a newly installed structure that may be a cold air source such as a culvert, the insulation shall be placed on level bedding at least 3” above the water pipe.

Method of Measurement

Cover insulation will be measured in linear feet along centerline of trench. Linear foot measurements encompasses side and top pieces of insulation.

Utility conflict insulation will be measured by square yards.

Basis of Payment

This work will be paid at the contract unit price per linear foot for "Water Main Insulation-Cover" and "Water Main Insulation – Utility Conflict" which price shall include all materials, equipment, tools and labor incidental thereto. Excavation and disposal shall conform to the Specifications and is incidental to this item.

Pay Item	Pay Unit
Water Main Insulation – Cover (Water Main)	LF
Water Main Insulation – Utility Conflict (Water Main)	SY

ITEM #1303198A - HYDRANT (WATER MAIN)

Description

A. The work required consists of the furnishing of all labor, equipment, appliances and materials and in performing all operations in connection with furnishing and installing new fire hydrants at the locations and to the details indicated and/or as directed by the Engineer including all pipe, fittings, valves and accessories, connections to other piping and structures, and testing of assemblies.

Materials

A. Ductile iron pipe and fittings shall be ductile iron pipe manufactured in accordance with AWWA C151, latest revision, thickness Class 52 per AWWA C150, latest revision. Fittings shall be ductile iron rated at 250 psi conforming to AWWA C110, latest revision. Ductile iron pipe and fittings shall be provided with a double thickness of cement-mortar lining conforming to AWWA C104, latest revision. The cement-mortar lining shall be seal coated. Exterior surfaces of pipe and fittings shall be given a standard bituminous coating of coal-tar or asphalt of 0.04" minimum thickness. Joints for ductile iron pipe shall be rubber gasket push-on type, while fittings shall have mechanical joints with retainer glands. Pipe and fitting joints shall conform to AWWA C110 and C111, latest revision. All pipe, pipe, fittings, accessories, and appurtenances shall be new and unused.

B. Excavation for watermain shall conform to the Section 2.86 Drainage Trench Excavation.

C. All bolts, nuts, rods, and miscellaneous connecting pieces not provided with an approved factory coating shall be given two (2) coats of bitumastic 50 after installation.

D. Crushed stone shall consist of clean, hard, durable, crushed rock and shall be satisfactorily free from fine sand, silt, or rock flour. Crushed stone shall be uniformly graded 3/4" washed stone and conforming to ASTM Designation: D693, latest revision.

E. Hydrant Tees shall be ductile iron and must provide positive restraint to mechanical joint valves/fittings attached to the branch. Shall include all accessories, nuts & bolts. Shall be ductile iron, high strength, low alloy steel per ANSI/AWWA A21.11/C-111. Must be North American made.

F. Hydrants shall be of the "dry barrel fire hydrant" post, compression shut-off type and shall conform to AWWA Specification C 502, latest revision and to the additional requirements specified herein.

1. Hydrants shall conform to the following specifications:
   a. Type of hydrant: Traffic type
   b. Bury depth: 5 feet.
   c. Open **RIGHT.**
   d. Number of hose and pumper outlets:
      1. Two – 2-1/2" inch hose outlets
      2. One 4-1/2" pumper outlet
   e. Type of outlet nozzle threads:
      1-1/2" hose nozzle with National Standard Thread
      4-1/2" steamer nozzle with the following thread specifications:
      O.D. Thread. .....5.420"
      Pitch Diameter .....5.276"
      Root Diameter..... 5.132"
      6 Threads per inch
   f. Size of hydrant (nominal diameter of main valve opening): 5-1/4."
   g. Size of inlet connection: 6"
   h. Type of inlet connection; Mechanical joint with retainer gland
   i. Direction of operating nut opening rotation: Right
   j. Size of operating nut: National standard 1-1/2" Pentagon
   k. Dry top construction.
   l. Break-away flange and couplings.
   m. Bronze to Bronze valve and valve seat
   n. 5 1/4 A Valve opening
   o. Red Base, Yellow Bonnet
   p. NSF 61 Certified
   q. Stem seal type: O-ring
   r. Nozzles shall be furnished with caps ***and chains.***

2. Hydrants shall conform to the torque requirements specified in AWWA Specification C502, latest revision, regardless of bury length.

3. The opening between the wrench nut and top of the hydrant bonnet shall be protected from rain and dirt by an acceptable means (dry top construction).

4. Hydrant top section shall receive two shop coats of primer conforming to the requirements of Section 4.2 of AWWA Specification C502, latest revision. Second primer coat is to be red in color. Hydrants shall receive two field coats of red paint meeting the acceptance of the owner.

5. For purposes of standardization, hydrants shall be Model No. B-62B as manufactured by American Darling Valve, Birmingham, Alabama; Super 200, Model No. A423, as manufactured by Mueller Company, Decatur, Illinois; or Guardian Model K-81A as manufactured by Kennedy.

Construction Methods

A. All new pipe shall have cast on it or stamped on it by means of a hand die stamp, the manufacturer's name or mark, and the year in which the pipe was cast. Also, the weight, thickness, class, and sampling period shall be painted on each pipe. All pipe, fittings, hydrants, and accessories shall be carefully inspected by the Contractor for damage before relocation and all defective, unsound, or damaged materials shall be rejected. The Engineer will make such additional inspection he deems necessary and the Contractor shall furnish all necessary assistance for such inspection.

B. No pipe joints shall be covered in any way until the joints have been inspected.

C. Proper implements, tools and facilities, satisfactory to the Engineer shall be provided by the Contractor for the proper and satisfactory execution of the work.

D. The Contractor shall coordinate new installation and relocation work with and in accordance, to the City of Meriden Water Department.

E. The interior of pipe, valves, hydrants, and fittings shall be thoroughly cleaned of foreign matter before being lowered into the trench and shall be kept clean during laying operations.

F. The trench bottom and bedding shall be shaped and compacted to give substantially uniform unyielding circumferential support to the lower quarter of pipe and valves along their entire length. Bell holes shall be excavated so that after placement only the barrel of the pipe receives bearing pressure from the trench bottom.

G. Hydrant assemblies, including all pipe, fittings, and accessories shall be installed in conformance with the AWWA Specification C600, latest revision, and the additional requirements specified herein.

H. Ductile iron pipe shall be cut only by means of abrasive saws, hack saws, wheel type cutters, or milling type cutters. The use of "squeeze" type pipe cutters, cutting torches, diamond points, and dog chisels will not be permitted. This work shall be done by the Contractor in a manner satisfactory to the Engineer and only experienced men shall be engaged thereon. Flame cutting of pipe by means of an oxyacetylene torch shall not be allowed.

I. Jointing of mechanical joints, fittings, and valves shall be provided in accordance with the printed recommendations of the pipe manufacturer and as specified. The mechanical joint fittings, specials, and valves shall be suitable for jointing with the

pipe with which they are used and the Contractor shall provide, at no additional expense to the Owner, all necessary adapters for the proper jointing of pipe, pipe fittings, specials, and valves. The last 8" outside of the spigot and inside of the bell of mechanical-joint shall be thoroughly cleaned to remove oil, grit, excess coating, and other foreign matter from the joint.

J. When assembling the joint it is essential that the gland be brought into place and bolts tightened in a manner to insure the maintaining of the same space between the gland and the face of the flange at all points around the socket. The range of bolt torque in making the joints shall be as recommended by the manufacturer of the mechanical joints. Overstressing of bolts will not be permitted; if effective sealing is not obtained at the recommended maximum bolt torque, the joint shall be disassembled, thoroughly cleaned and reassembled.

K. Hydrants and appurtenances, including thrust blocks, shall be installed as detailed on the contract drawings. Hydrants shall be set straight and true on a firm base. Bury depth shall be as required to maintain 5 feet of cover on the hydrant branch pipe. The above ground portion of each new hydrant shall be covered with a burlap bag until it is accepted and ready for use.

L. The Contractor shall remove each existing hydrant assembly using methods that will not damage the assembly. The Contractor shall furnish and install tie rods and clamps and concrete thrust blocks as necessary to ensure existing facilities are properly secured prior to removing hydrant assembly. The Contractor shall exercise care in the removal of these facilities. Any existing facilities damaged by the Contractor due to operations shall be replaced with new facilities, meeting these material specifications, by the Contractor with no separate payment for these items. Removed hydrant assemblies shall be brushed, cleaned, transported to the City of Meriden Water Division yard on Parker Avenue in Meriden and stacked there at a location suitable to the Owner. Hydrants may be re-used upon approval of Water Division.

M. A new hydrant shall be installed as detailed on the contract drawings and as noted in these specifications.

N. Existing facilities (gate valves and piping) which are deemed unserviceable by the Engineer, shall be removed, and properly disposed of and replacement facilities shall be furnished and installed by the Contractor with payment provided per the appropriate bid items for such work. Existing fire hydrants with associated valves when necessary, shall be relocated as shown on the contract drawings or as directed by the Engineer.

O. A solid sleeve shall be used for connection to the existing branch pipe and new 6" ductile iron pipe shall be installed as necessary so the hydrant may be relocated behind the new curb line. The existing 6" gate valve and ductile iron piping shall

remain unless otherwise directed by the Engineer. The Contractor shall furnish and install tie rods and clamps and concrete thrust blocks as necessary to ensure facilities are properly secured prior to removing hydrant assembly. The Contractor shall exercise care in the removal and resetting of these facilities. Any existing facilities damaged by the Contractor due to operations shall be replaced with new facilities, meeting these material specifications, by the Contractor with no separate payments for these items.

Hydrostatic Testing

A. Test for leakage shall be conducted on all portions of completed water pipelines and appurtenances and all methods and procedures for performing the testing of water mains shall be subject to the acceptance of the Engineer. Unless otherwise permitted, the testing shall be conducted with partial backfilling over the barrel of any new pipe, between new pipes, pipe fittings, valves, and appurtenances of the section. Interiors of all pipe shall be cleaned of all dirt and foreign materials. The water pipelines may be tested in convenient sections acceptable to the Engineer.

B. Testing of water mains shall conform to the requirements of Section 4 of the AWWA Specification C 600, latest revision, except as herein specified. The test pressure shall be a minimum of 200 psi or 50% above working pressure, whichever is greater, for at least a two-hour duration. Maximum allowable leakage shall be as specified by the Engineer for the appropriate pipe diameter. Test results shall be accurate to within 0.1 of a gallon.

C. Testing of water mains shall be performed by the Contractor at their expense as witnessed by the Engineer. Notarized records of the test results shall be submitted by the Contractor to the Engineer. In case the specified rate of leakage for the portion of the pipeline being tested is exceeded, the Contractor shall find and repair the leaks and the pipelines shall be retested repeatedly if necessary, by the Contractor, until the required conditions are met, at no additional expense to the Owner.

Disinfecting Hydrant Assemblies

A. All portions of completed water mains and appurtenances are to be disinfected. Disinfection shall be in conformance with AWWA Specification C601, latest revision. In particular, the Contractor shall follow all of the disinfection procedures of Section 9 - "Disinfection Procedures When Cutting Into or Repairing Existing Mains" of AWWA Specifications C601, unless otherwise directed by the Engineer.

B. The Contractor shall be responsible for satisfactory disposal of all flushing water and chlorinated water at no additional expense to the Owner.

C. After the mains have been flushed clean, samples of the water contained in the mains shall be arranged by the Contractor to be taken by a City-approved testing laboratory for bacterial analysis. Only after the analysis of the samples are approved by the City shall the mains be made part of the water system. In the event that positive reports of contamination are received, the Contractor shall flush and re-chlorinate the mains as many times as may be necessary to obtain approved results.

E. The Contractor shall be required to take samples and have testing performed by an approved testing laboratory for a minimum of the following items:

1. Total Coliform
2. Standard Plate Count
3. Gross Hydrocarbons
4. Volatile Organics

E. The Contractor shall take the required water samples after completion of flushing and disinfecting of the water mains as directed by the Owner. The Contractor shall be responsible for coordination and delivery of the samples to the approved testing laboratory. The Contractor shall also bear the costs of all water quality testing and analysis expenses by the approved laboratory. The Owner may also require additional testing if deemed necessary, at no additional expense to the Owner.

F. The Contractor shall submit an affidavit of compliance to the Owner. The affidavit of compliance shall be the bacteriological test results certifying the water sampled from the water main to be free of coliform bacteria contamination.

Method of Measurement

A. Fire hydrants shall be measured as units, complete in place, including excavation, regardless of bury depth as measured from, but not including the tee in the water main to the end of the excavation.

B. Thrust blocks, retainer glands, testing, disinfection, and joint restraint shall not be measured for payment.

Basis of Payment

A. New fire hydrant installations shall be paid for at the contract unit price each for "Fire Hydrant" (Water Main) which price shall include the hydrant, ductile iron pipe, valve and valve box, joint restraint, thrust blocks, pipe bedding and drain material, testing and disinfection, protection of utilities, trench excavation and backfill, gravel fill, temporary pavement restoration, and all labor, tools, equipment and incidentals necessary to complete the work as specified, indicated and as directed by the Owner.

Pay Item	Pay Unit
Hydrant (Water Main)	EA

ITEM #1400101A 15" PVC PIPE (SANITARY SEWER)

Description:

A. The work required in this specification consists of furnishing all pipe, labor, equipment, appliances and materials in performing all operations in connection with the construction of sanitary sewer pipe and concrete encased sanitary sewer pipe at the locations and to the lines and grades indicated and/or as directed, including all pipe, pipe fittings and accessories, connections to other piping and structures, handling wastewater, testing of pipelines and material tests, jointing and jointing materials, installation, trenching, backfill, bedding materials, services of manufacturer's representatives and all other related and appurtenant work, complete in place and accepted, in accordance with the drawings and specifications and as directed by the Owner.

B. Quality Assurance - The Contractor shall furnish to the Owner notarized test reports from the pipe and gasket manufacturers including methods of tests by an approved independent testing laboratory to show compliance of all materials furnished under this section of the specifications with all specification requirements. A copy of each test report is to be attached to the shipping list of each shipment itemizing by size; class and wall type, serial number and date of manufacture. All required testing of pipe materials furnished under this section of the specifications shall be provided by the contractor at no additional expense to the Owner.

C. The Contractor shall furnish, at no additional expense to the Owner, the services of pipe manufacturer's representatives for such lengths of time as may be necessary to properly instruct the Contractor's personnel in the proper handling, installation and jointing of the piping in accordance with the printed recommendations of the manufacturer of the pipe.

D. Guarantee - The Contractor shall furnish to the Owner a written guarantee signed by the manufacturer of the pipe, pipe fittings and gaskets which he proposes to furnish, which shall warrant and guarantee that the pipe, fittings and gaskets shall not fail or be injured as a result of conveying sewage, industrial wastes or groundwater. The form of guarantee respects be satisfactory to the Owner.

E. Refer to the CT DOT 818 for all earthwork and restoration associated with this special provision.

Materials:

A. Polyvinyl Chloride Pipe (PVC)

1. The material required by this section of the specifications shall be new and unused type PSM, SDR-35 Polyvinyl Chloride (PVC) sewer pipe with integral bell-and-spigot joints. Pipe and fittings shall meet and/or exceed all of the requirements of ASTM Specification D 3034, latest revision.

2. Standard pipe lengths shall be 20 feet, with a tolerance of one inch. PVC sewer pipe shall meet the following dimensional tolerances given in inches.

Nominal Size (inches) Length	Outside Diameter Average	Min. Wall Thickness	Wgt/lbs 20'
15	15.300	0.437	283.8

3. Each length of pipe and each fitting shall be provided with integral bell-and-spigot ends and accurate joint surfaces. The joint shall be sealed by a round neoprene gasket so that the joint will remain watertight under all conditions of service, including movement due to expansion, contraction and normal settlement. PVC pipe and fitting joints shall meet or exceed the requirements of ASTM Specification D3212, latest revision.

4. Elastomeric gaskets for sealing joints shall meet or exceed ASTM Specification F 477, latest revision.

5. A suitable watertight system shall be used for connection of sewer pipe to manhole walls. The system shall achieve adequate bond with both the manhole and the pipe to prevent failure or leakage due to settlement or pullout of the pipe at the manhole. The Contractor shall furnish details of his proposed system of connection of pipe to manholes prior to shipment of pipe or manholes to the project for review and approval by the Owner.

B. Concrete for concrete encasement of the pipe shall be Class "A" concrete and shall conform to Section M.03 of Form 816.

C. Backflow Preventer

1. The backwater valve shall conform to connect to SDR35 PVC (ASTM D3034).

Construction Methods:

A. Inspection

1. All pipe, fittings, and accessories shall be carefully inspected by the Contractor for defects before installation and all defective, unsound or damaged materials shall be rejected. The Owner will make such additional inspection he deems necessary, and the Contractor shall furnish all necessary assistance for such inspection.

2. No pipe joints shall be covered in any way until the joints have been inspected.

B. Preparation

1. Proper implements, tools and facilities shall be provided by the Contractor for the proper and satisfactory execution of the work.

2. The interior of pipe and fittings shall be thoroughly cleaned of foreign matter before being lowered into the trench and shall be kept clean during laying operations.

3. The trench bottom and bedding shall be shaped and compacted to give substantially uniform unyielding circumferential support to the lower quarter of pipe along the entire length of each pipe. Bell holes shall be excavated so that after placement only the barrel of the pipe receives bearing pressure from the trench bottom.

4. Pipe, pipe fittings and accessories shall be handled, stored, installed, jointed and protected by the Contractor in strict accordance with the printed recommendations of the manufacturer of the pipe materials.

C. Installation

1. PVC sewer pipe shall be installed in conformance with ASTM Specification D 2321, latest revision.

2. The Contractor shall furnish to the Owner for his use, copies of the printed recommendations of the pipe manufacturer for the handling, storing, protection and installation of pipe and fittings.

3. Pipe laying shall proceed upgrade with the spigot ends of bell-and-spigot pipe pointing in the direction of flow.

4. Each pipe shall be laid true to line and grade, and in such manner as to form a close concentric joint with the adjoining pipe and to prevent sudden offsets in the flow line. No spalls, shims or lumps shall be used to raise the pipe to grade. All pipe shall be maintained accurately to the required line and grade. Any pipe that has the grade or joint disturbed after laying shall be re-laid.

5. Trenches shall be kept free from water to prevent flotation of the pipes. Pipelines shall be constructed in dry trenches and shall not be laid when the condition of the trench or the weather is unsuitable for such work. At times when work is not in progress, open ends of pipe and fittings shall be securely closed so that no trench water, earth or other substance will enter the pipe or fittings. Pipes shall not be used as conductors for trench drainage during construction.

6. All materials found to be defective during the progress of the work will be rejected by the Owner and the Contractor shall promptly remove such defective material from the job site. All defective material shall be replaced by the contractor with new sound material at no additional expense to the Owner. The Contractor shall be responsible for the safe storage of all material.

7. Joint surfaces shall be protected from damage and shall be kept free from dirt or other foreign material at all times; all joint surfaces shall be free from any defects or materials which would impair the proper joining and watertightness of joints. Pipe and fittings on which, in the opinion of the Owner, the joint materials or joint surfaces have been damaged, deformed, indented, marred or otherwise defective will be rejected and shall be removed from the site and the contractor shall replace the rejected material with the new sound material, at no additional expense to the Owner.

8. The installation of lateral sanitary sewer service pipe to the street right of way shall be completed. All stub openings of sewer pipe shall be capped and marked, using end caps with gaskets. A house connection marker shall be provided at the end of each lateral at the location indicated or directed. Unless otherwise directed, markers shall be accurately placed as the backfilling progresses. The contractor shall record all house connections installed by station, along with ties to fixed points. A duplicate set of the location records shall be furnished to the Engineer.

9. Pipe stoppers or temporary plug shall be installed, sealed and blocked in such a manner as to prevent any leakage and to withstand an internal hydrostatic pressure of not less than 15 psi; timber blocking shall be of adequate size and arrangement to prevent the stopper from being blown off the line and timber bracing shall extend back to the undisturbed end of trench.

10. Backwater Valve
    A. Valve is to be installed in a nominally horizontal line only, with no more than ¼" per foot of slope. The access plug is to be in the vertical orientation.
    B. The valve should be installed with direction of flow, as indicated by the directional arrow on the outside of the valve.
    C. Care must be taken to keep solvent cement out of the valve body when making solvent weld connections. Flap should be tested for freedom of movement and proper seating after solvent weld connections have thoroughly cured.
    D. To ensure proper flap function, threaded cap must be securely tightened.
    E. It is recommended that the Backwater Valve be periodically inspected for proper function, to ensure that no solid matter has become trapped between the flap and the valve body.

11. Leakage Tests for PVC Pipe

    A. The sewers and appurtenant structures connected thereto shall be made as nearly watertight as practicable. Leakage tests will be required for all sanitary sewers and manholes. Leakage into or from the sewers and structures will be determined by low pressure air tests as specified herein and as directed by the Owner. The Contractor shall furnish the Owner/Engineer with certified copies of the leakage tests results for review and approval.

    B. Low pressure air testing shall be undertaken in conformance with the following requirements, procedures and criteria.

        1. Equipment shall be Cherne Air-Loc Equipment as manufactured by Cherne Industrial, Inc., Edina, Minnesota, Sewer Air Test System as manufactured by United Surveys, Inc., Cleveland, Ohio or equal. Equipment shall meet the following minimum requirements:

            a. Pneumatic plugs shall have a sealing length equal to or greater than the diameter of the pipe to be tested.

            b. Pneumatic plugs shall be able to resist internal test pressures without requiring external bracing or

blocking.

c. All air used shall pass through a single control panel.

d. Three individual hoses shall be used for the following connections:

(1) From control panel to pneumatic plugs for inflation.

(2) Front control panel to sealed line for introducing the low pressure air.

(3) From sealed line to control panel for continually monitoring the air pressure rise in the sealed state.

e. The following procedure shall be used in air testing:

(1) All pneumatic plugs shall be seal tested before being used in the actual test installation. One length of pipe shall be laid on the ground and sealed at both ends with the pneumatic plugs to be used in the testing. Air shall be introduced into the plugs to be used in the testing. Air shall be introduced into the plugs to 25 psig. The sealed pipe shall be pressurized to 10 psig. The plugs shall hold against the 10 psig pressure without bracing and without movement of the plugs.

(2) After a manhole to manhole reach of pipe has been backfilled and cleaned, and the pneumatic plugs are checked by the above procedure, the plugs shall be placed in the line at each manhole and inflated to 25 psig. Low pressure air shall be introduced into the sealed line until the internal air pressure reaches 3.5 psig minimum greater than the average back pressure of any groundwater that may be over the pipe. Groundwater backpressure shall be determined by measuring the average height of the groundwater table in feet above the invert of the section of pipe being tested. The height in feet shall be divided by 2.3 to determine

the pounds of pressure that shall be added to all test pressures. For example, if the average height of groundwater over the pipe invert is 11.5 feet, the pressure to be added would be 5 psig (11.5/2.3 =5.0). The prescribed pressure drop shall not exceed 0.5 psig from 3.5 psig to 3.0 psig in excess of the groundwater pressure above the top of the sewer. At least two minutes shall be allowed for the air pressure to stabilize. Any necessary adjustments in air pressure shall be made to the internal pressure and an additional two minute stabilization period shall be allowed. After the stabilization period, the air hose from the control panel to the air supply shall be disconnected. The portion of line being tested shall be termed "Acceptable" if the time required in minutes is less than the time shown for the given diameters in the following table:

3. Should the low pressure air tests on any section of the sewers, including manholes, show an air pressure drop, exceeding the acceptable limits specified herein, the Contractor shall locate, repair or replace defective joints and work in a manner satisfactory to the Owner, and retest, at no additional expense to the Owner, until the air pressure drop for each section of the sewers being tested does not exceed the rate specified herein.

4. If, in the judgment of the Owner, it is impracticable to follow any of the foregoing procedures exactly for any reason, modifications in the procedures shall be made as required or approved, but in any event, the Contractor shall be responsible for the ultimate tightness of all pipelines within the respective leakage requirements specified herein. Any modifications to the procedures, as directed, shall be performed by the contractor at no additional expense to the Owner.

D. Connections and Provisions for Connections

1. Backflow preventers, outlets, laterals, stubs, connection chimneys, etc. required to connect existing sewers to the new sewer or to provide for future connections shall be furnished and set where and as indicated on the contract drawings or as ordered by the Engineer.

2. When noted on the engineering drawings, a "cored" connection shall be used when connecting a proposed sanitary sewer main to an existing manhole, the "cored" connection shall be made by coring an opening in the wall of the manhole at the existing invert and inserting a flexible connection into the cured opening. After the flexible coupling is sealed at the manhole wall, the proposed sanitary sewer pipe shall be inserted into the coupling and sealed with a pipe clamp.

3. Handling wastewater flows when connecting to buildings and existing manholes as indicated on plans shall be included as incidental to the work.

E. Displacement and Alignment Tests

1. Sewers will be checked by the Owner to determine whether any displacement or deflection of the pipe has occurred after the trench has been backfilled. If the illuminated interior of the pipeline shows poor alignment, displaced or deflected pipe or any other defects, the defects designated by the Owner shall be corrected to the satisfaction of the Owner, at no additional expense to the Owner.

F. Concrete encasement shall be placed after the pipe is installed in accordance to the details shown on the plans.

Method of Measurement

A. Sewer Pipe and Concrete Encased Sewer Pipe will be measured for payment by the number of linear feet of the various sizes measured in place along the invert of the piping, complete in place and accepted. In measuring the lengths of pipe for payment, the spaces occupied by manholes will not be included, and wye or tee branches will be included.

B. Sanitary sewer house connection laterals shall be measured for payment by the number of linear feet along the centerline of the pipe from the end of the tee/wye provided on the mainline to the pipe stops.

C. Handling wastewater, backflow preventers, manhole coring and connections made to existing stubs or pipes, abandoning/plugging pipes and manhole openings shall not be measured for payment.

Basis of Payment

A. The quantity of Sewer Pipe and Concrete Encased Sewer Pipe measured in place as provided in the preceding paragraph will be paid for at the contract unit price per linear foot for 15" PVC Pipe (Sanitary Sewer), as listed in the bid, which price and payment shall constitute full compensation for furnishing all materials, trench excavation and backfill, impervious trench dam, gravel fill, warning tape, temporary pavement restoration, concrete, the hauling, handling, and laying of the pipe, leakage tests, testing of all materials, furnishing services of manufacturer's representatives and all labor, equipment, tools, materials and all other costs incidental and necessary to complete the item as specified, as indicated and as directed by the Owner.

B. The quantity of new sanitary sewer laterals measured in place will be paid for at the contract unit price per linear foot, as listed in the bid; which price and payment shall constitute full compensation for furnishing all materials, trench excavation, backfill, bedding, pipe laying, jointing, leakage tests, temporary pavement, restoration and appurtenant work, complete in place and accepted and all other work incidental and necessary to complete the work as indicated and directed by the Owner.

C. Handling wastewater, backflow preventers, manhole "coring" and connections to existing stubs or pipes shall not be paid and are incidental to this work.

Pay Item	Pay Unit
15" PVC Pipe (Sanitary Sewer)	LF

ITEM # 1403001A- MANHOLE (SANITARY SEWER)
ITEM # 1403010A- MANHOLE FRAME AND COVER (SANITARY SEWER)
ITEM # 1403020A- EXISTING MANHOLE FRAME & COVER ADJUSTMENT (SANITARY SEWER)

Description

A. The work covered by this section includes the furnishing of all plant, labor, equipment, appliances, and materials and performing all operations in connection with the satisfactory installation of precast reinforced concrete manholes and all incidental work, complete, in strict accordance with the specifications and applicable drawings and conditions of the contract.

B. The Contractor shall provide the Engineer with shop drawings for all precast materials with a description of all methods of jointing. In addition, shop drawings for manhole steps, manhole frames and manhole covers shall be submitted to the Engineer for approval prior to installation.

C. It is the intention of these specifications and the desire of the Engineer that the manholes, including all component parts, have adequate space, strength and leak proof qualities considered necessary by the Engineer for the intended service. Space requirements and configurations, shall be as shown on the drawings. Manholes shall be an assembly of precast sections with steel reinforcement, with approved jointing or concrete cast monolithically in place with reinforcement. In any approved manhole, the complete structure shall be of such material and quality as to withstand loads of 8 tons (H-2O loading) without failure and excess leakage for the life of the structure. A period generally in excess of 25 years is to be understood as the life of the structure.

D. Manholes shall be constructed at the locations, to the elevations, and in accordance with notes and details shown on the drawings.

E. Refer to the CT DOT 818 for all earthwork and restoration associated with this special provision.

Materials

A. Precast reinforced concrete units:

1. Precast reinforced concrete manhole bases, risers, tops and grade rings shall be of the types indicated or as directed.

2. Precast reinforced concrete manhole bases, risers, transition sections and tops shall conform to the requirements of ASTM C478, latest revision except as modified herein and/or on the drawings.

3. The height and diameter of manhole bases shall be as required to accommodate the size of sewer pipe used.

4. The manhole risers shall be available in 2, 3, or 4-foot lengths. Manhole tops of the eccentric cone type shall be 3 or 4 feet high with a 36-inch inside diameter opening at the top. Wall thickness of manhole risers shall not be less than 5 inches. Manholes over 8 feet deep shall have 5-foot inside diameter.

5. When shallow installations do not permit the use of a cone type top or where directed, flat slab tops shall be used. Flat slab tops shall not be less than 6 inches thick and shall have an opening with an inside diameter of 36 inches.

6. Transition sections shall be similar to the tops and used as reducers to join the larger bases with the four-foot diameter risers. The transition sections shall be of the length required and have a four-foot opening at the top. Wall thickness of transition sections and cone type tops shall not be less than 5 inches at the base and shall taper to a thickness not less than 8 inches at the top.

7. Manhole steps shall be provided in each manhole. Manhole steps shall be arranged in the manhole bases, transition sections, risers and cones so as to provide a manhole step ladder approximately 12 inches on center for the full height of installation. Manhole steps shall be copolymer polypropylene plastic coated ½" grade 60 steel reinforced step Model No. PS2-PFSL in conformance with ASTM C478 paragraph 11 as revised, as manufactured by M.A. Industries, Peachtree City, Ga. or approved equal.

8. All manhole bases, transition sections, risers and tops shall be joined using Butyl Rubber Section Joints conforming to Federal Specification SS-S-210.

9. The exterior surfaces of all manholes shall be shop coated with two coats of Super Service Black as manufactured by Koppers Company Inc., or Heavy Duty Black 46-449 as manufactured by Tnemec or equal.

B. Openings In Manhole Bases and Risers

1. Openings for pipes entering manhole bases and risers shall be provided at the locations and to the arrangements and dimensions shown on the approved shop drawings.

2. Openings in manhole bases and risers shall be provided with a prefabricated mechanical type joint seal between manhole walls and entering pipes. Joint seal shall be of a type to ensure watertight jointing between manhole and pipes under all conditions of installation. The type of joint seals to be used shall be subject to approval and shall be as shown on the approved shop drawings.

C. Mortar Grout

1. Non-shrink type mortar or grout shall be a factory-mixed ready-to-use product containing an especially prepared metallic aggregate, cement and sand and other components which shall produce a mortar or grout with properties to counteract shrinkage, increase density, withstand impact, improve workability, and produce watertight joints.

D. Concrete

1. The concrete used for precast manhole bases, transition sections, risers and tops shall have an average strength of 5,000 psi at 28 days.

2. Strength shall be determined by tests on 6-inch by 12-inch vibrated test cylinders cured in the same manner as the manhole bases, transition sections, risers and tops or by any other approved method.

3. Not less than two concrete strength tests shall be made for each 100 vertical linear feet of manhole bases, transition sections, risers and tops.

4. Testing may be conducted at the manufacturer's plant or at an approved testing laboratory and shall be the responsibility of the Contractor, at no additional expense to the Owner.

E. Reinforcing Steel

1. Reinforcing steel used for precast manhole bases, transition sections, risers, and tops shall conform to ASTM A185, latest revision.

F. Cement

1. Cement shall be moderate heat-of-hardening portland cement conforming to ASTM Designation C 150, latest revision, Type I for Brick work and Type II for precast units.

G. Absorption

1. Absorption is to be determined by absorption test described in ASTM Designation C 478, latest revision, and shall not exceed 8 percent of dry weight.

H. Brick

1. Brick for manholes shall conform in all respects to ASTM Designation C 32, Grade SM, latest revision, size 2-1/2 inches by 3-3/4 inches by 8 inches.

2. Bricks that are broken, warped, cracked or of improper size or quality or unduly chipped or otherwise defective shall not be used in the work and shall be removed from the site.

I. Mortar Plaster

1. Mortar and plaster for brick work shall be composed of one part Portland cement and two parts sand with only sufficient water added to make a stiff plastic mortar of a consistency and texture satisfactory to the Owner.

2. Mortar shall be used so that it will be in place before the initial setting of cement has taken place; retempering of mortar in which the cement has started to set will not be permitted.

J. Sand

1. Sand for mortar shall be graded uniformly from fine to coarse and when dry shall pass a screen having 8 meshes to the inch.

2. Sand shall consist of an aggregate having clean, hard, durable, strong, uncoated grains and free from deleterious amounts of dust, lumps, soft or flaky particles, shale, alkali, organic matter, loam, or other deleterious substances.

3. The sand shall be washed clean before loading on delivery trucks. Natural sand which shows a color darker than the standard color when tested in accordance with the Standard Method of Test for Organic Impurities of ASTM Designation C 40, latest revision, will be cause for rejection.

K. Water

1. Mixing water for concrete and mortar shall be clean and fit to drink and obtained preferably from the municipal supply.

L. Bedding Materials

1. Gravel bedding shall consist of hard durable material free from roots, sod, rubbish, organic material, clay or loam and meeting ASTM C33 stone size No. 67 as follows:

100%	passing 1" screen
90 - 100%	passing 3/4" screen
20 - 55%	passing 3/8" screen
0 - 10%	passing #4 sieve
0 - 5%	passing #8 sieve

2. Where ordered by the Engineer to stabilize the base, screened gravel, or crushed stone ½ inch to 1-1/2 inches shall be used.

M. Manhole Frames and Covers

1. Cast-iron manhole covers and cast-iron watertight frames and covers shall conform to the details, types and styles as specified and as shown on the drawings. Shop drawings shall be submitted to the WPCF for approval before fabrication.

2. Gray iron castings shall conform to the requirements of AASHTO Designation: AASHTO M 105 (ASTM A48), Class 35B. For castings subject to traffic loads furnish gray iron castings conforming to AASHTO M 105 (ASTM A48), Class 35B and AASHTO M306, latest edition, and shall be rated H20 per AASHTO M306, "PROOF-LOAD TESTING."

3. Iron castings shall be true to pattern in form and dimensions, free from pouring faults, sponginess, cracks, blowholes, and other defects in positions affecting the strength and value for the service intended.

4. The surface of the manhole covers shall have a diamond pattern with the words "MERIDEN" and "SEWER", or "STORM" as required, cast in raised letters.

5. Covers shall have two non-penetrating ergonomic pick slots, for ease of cover removal.

6. The cast-iron manhole covers and cast-iron watertight manhole frame and covers for manhole structures shall be as manufactured by EJ USA, INC., Campbell Foundry Company, or approved equal.

N. Sealant Materials

1. Sealant materials for manhole frames shall be manufactured by Avanti International (AV-219 Fibrotite and Polyurethane Hydrophylic Resin), Parsons Environmental (Parson PoxyF6) or approved equal.

O. Extension / adaptor rings

1. Manhole Extension/Adjustment/Riser Rings shall conform to the City Standard Details

2. Above Ground:

All material shall be domestic carbon steel conforming to ASTM A36. The bottom (inner) ring shall be rolled from ¾" thick material, and the top (outer) ring shall be rolled from ½" thick material. The top (outer) ring shall have a nominal inside diameter equal to the existing top cover diameter plus 3/16". The inner and outer rings shall be concentric and be joined together by welding.

For non-adjustable riser rings, the inner and outer rings shall be joined together with a full circumferential weld.

For adjustable riser rings, an adjustment system shall be supplied and welded in line with the bottom (inner) bearing bar. The mechanical adjustment stud shall be made of type 304 stainless steel and have a positive lock nut. The adjustment system shall allow for the manhole riser diameter to adjust +/-3/8" from nominal.

For cover adjustments less than the thickness of the cover, the inner and outer rings shall be joined together with 12 or 14 gage strip steel conforming to ASTM A1011.

After fabrication, risers shall be coated with either water based bituminous asphalt paint or a BASF E-coat with charcoal black topcoat.

The manhole riser ring shall be anchored to the manhole frame with three 1" cone tip set screws to prevent any movement from traffic.

All welding shall be performed by AWS D1.5 certified welders.

3. Below Ground:

All below ground frame adjustments shall be completed with the use of a rubber composite adjustment ring. The ring shall be used to minimize water infiltration between the manhole frame and concrete cone or brick layer, and to protect the substructure from traffic vibration and concentrated load stresses. The rubber composite adjustment ring shall be an appropriate size (flat or tapered) with which the adjusted manhole frame will achieve the best match to the finished road surface.

Below ground adjustment rings shall be a molded rubber composite ring.

Molded rubber composite rings shall be minimum 80% by weight recycled rubber and minimum 10% by volume, recycled coated fiber for added strength and durability.

The rubber composite adjustment ring shall be installed in conjunction with a polyurethane sealant, per the manufacturer's installation instructions.

All rubber composite manhole adjustment risers Rubber composite shall be the EJ USA, INC. INFRA-RISER® as manufactured and supplied by EJ USA, INC. or approved equal.

Construction Methods

A. Inspection

1. All manhole bases, transition sections, risers, tops, steps, frames and covers will be inspected upon delivery. Those which do not conform to these specification requirements will be rejected and shall be removed immediately from the site by the Contractor. The Contractor shall furnish all labor and facilities necessary to assist the inspector in inspecting the material.

2. All manhole bases, transition sections, risers, tops, steps, frames and covers which have been damaged after delivery or during installation shall be removed and replaced by the Contractor with new, sound and approved material, at no additional expense to the Owner. At the time of inspection, the surfaces of bases, transition sections, risers and tops shall be dense and close-textured. Cores shall serve as a basis for rejection of manhole bases, transition sections, risers and tops if poor bond with reinforcement steel exists or reinforcement is exposed.

3. The quality of all materials, process of manufacture, and the finished manhole bases, transition sections, risers, and tops shall be subject to inspection and approval by the Owner. Such inspection may be made at the place of manufacture and/or on the site, and the manhole bases, transition sections, risers, and tops shall be subject to rejection at any time on account of failure to meet any of the specification requirements, even though sample manhole bases, transition sections, risers, and tops may have been accepted as satisfactory.

B. Excavation And Backfilling

1. Excavation, backfilling, and compacting shall be completed in accordance with the Specifications in this Contract.

C. Installation Of Manhole Bases and Sections

1. Precast bases shall be placed on a six-inch layer of compacted bedding material as described elsewhere in this Specification. The excavation shall be properly dewatered while placing bedding material and setting the base.

2. Each manhole base, transition section, riser, and top shall be eased into its position in the trench using materials and methods as recommended by the manufacturer of the precast units. The Contractor shall provide all necessary slings, straps and other devices for the safe and satisfactory handling and support of manhole bases, transition sections, risers and tops during lifting, installation and final positioning. Lifting holes may be permitted provided the holes are plugged and sealed watertight with mortar, all as approved.

3. Manhole bases, transition sections, risers and tops shall be installed using approved jointing methods which are completed in accordance with the manhole manufacturer's recommendations, and as approved. Manhole bases, transition sections, risers, and tops shall be installed level and plumb. Water shall not be permitted to rise over newly made joints until after inspection and acceptance. All jointing shall be done in a manner to ensure watertight joints.

4. Openings shall be provided in the precast manhole bases and risers to receive entering pipes, and these openings shall be made at the place of manufacture. The openings for all entering pipes shall be provided with the approved type mechanical joint sealing device shown on the approved shop drawings and the installation of pipes entering the manholes and the installation of the mechanical joint sealing device made in strict conformance with the manhole manufacturer's printed recommendations and so as to obtain watertight joints between manholes and pipe and in a satisfactory manner. Five copies of the manufacturer's printed recommendations shall be furnished to the owner.

5. Care shall be taken to assure that the openings are made to permit setting of the entering pipe at its correct elevation as indicated or directed. Mortar used in sealing spaces between entering pipes and openings in manhole walls shall be of the non-shrink type. Damaged bases and risers by jointing devices will be rejected and shall be replaced by the Contractor at no additional expense to the Owner.

6. Manhole bases, transition sections, risers and tops shall be installed so that the manhole steps are in alignment.

7. Manhole steps shall be installed in accordance with the requirements of the U.S. Department of Labor, Occupational Safety and Health Administration, CFR 29, Part 1910.27g, as amended.

D. Installation Of Cast Iron Frames and Covers

1. Cast iron frames and covers shall be installed where shown on the plans. Frames shall be set concentric with the top of the masonry and in a full bed of mortar so that the space between the top of the manhole masonry and the bottom flange of the frame shall be completely filled and made watertight. A thick ring of mortar extending to the outer edge of the masonry shall be placed all around and on the top of the bottom flange. The mortar shall be smoothly finished and have a slight slope to shed water away from the frame.

2. The cover shall <u>not</u> have vent holes, and shall fit firmly within the existing frame, with the top being flush with the existing frame. Gaskets or fillers will not be allowed. The cover shall have concealed pick holes.

E. Installation - Cast Iron Watertight Frames and Covers

1. Cast iron watertight frames and covers shall be installed where shown on the plans. Frames shall be set concentric with the top of the masonry and in a full bed of mortar so that the space between the top of the manhole masonry and the bottom flange of the frame shall be completely filled and made watertight. A thick ring of mortar extending to the outer edge of the masonry shall be placed all around and on the top of the bottom flange. The mortar shall be smoothly finished and have a slight slope to shed water away from the frame.

2. The cover shall fit firmly within the frame with the top being flush. The entire installation shall be watertight. There shall be no vent holes.

F. Masonry Construction

1. Brick masonry shall include brick masonry walls for extending manhole walls to grade when directed; formed brick masonry for constructing manhole inverts and invert tables, mortar, building-in or manhole steps and pipes and appurtenant work.

2. Brick masonry shall be provided to the details and dimensions indicated or as directed. All exterior surfaces of brick masonry manhole walls shall be plastered with a 1:2 Portland cement and sand mortar plaster to provide a minimum thickness of ½ inch; mortar plaster shall be applied with sufficient pressure to ensure a dense plaster completely filling all voids and thoroughly bonded to the brick work.

3. Inverts shall have a cross section shaped to conform with connecting sewers; changes in size shall be made gradually and evenly.

4. Brick masonry construction shall be done in a manner to ensure watertight construction and all leaks in brick masonry shall be sealed. Brick masonry shall be repaired or replaced so as to obtain watertight construction at no additional expense to the Owner.

5. All workmanship shall conform to the best standard practice and all brick masonry shall be laid by skilled workmen. Brick masonry walls shall be constructed to the thickness indicated. All beds on which masonry is to be laid shall be cleaned and wetted properly. Brick shall be wetted as required and shall be damp but free of any surface water when placed in the work.

6. Bed joints shall be formed of a thick layer of mortar which shall be smoothed or furrowed slightly. Head joints shall be formed by applying to the brick to be laid a full coat of mortar on the entire end or on the entire sides as the case requires, and then shoving the mortar-covered end or side of the brick tightly against the bricks laid previously; the practice of buttering at the corners of the brick and then throwing mortar or scrapings into the empty joints will not be permitted. Dry or butt joints will not be permitted. Joints shall be uniform in thickness and shall be approximately 1/4 inch thick. Joints on the inside face of walls shall be tooled slightly concave with an approved jointer when the mortar is thumb print hard, the mortar shall be compressed with complete contact along the edges to seal the surface of the joints.

7. Brickwork shall be constructed accurately to dimensions and brickwork at top of manholes shall be to the dimensions of the flange of the cast iron frames.

8. No water shall be allowed to flow against brickwork or to rise on the masonry for 60 hours after it has been laid and any brick masonry damaged in this manner shall be replaced as directed at no additional expense to the Owner.

9. Adequate precautions shall be taken in freezing weather to protect the masonry from damage by frost.

10. All pipes, or castings to be embedded in the brickwork shall be accurately set and built-in as the work progresses; pipe stubs shall be closed with suitable plugs in an approved manner.

11. The outside face of all brickwork shall be plastered to the thickness and using the mortar specified herein; plaster shall be troweled to a smooth, hard finish and no backfill shall be placed until the mortar has thoroughly hardened.

G. Leakage Tests

1. Leakage tests shall be made by the Contractor at his expense and observed by the Engineer on each manhole. The test shall be by vacuum in accordance with ASTM Specification C-828-80. Notarized records of the test results shall be submitted by the Contractor to the Owner for approval.

2. The vacuum testing system shall be as supplied by NPC Systems, Inc., or approved equal. The testing shall be done immediately after assembly of the manhole and before backfilling. A 60-inch/lb. torque wrench shall be used to tighten the external clamps that secure the test cover to the top of the manhole. All lift holes shall be plugged with a non-shrinking mortar, as specified. The Contractor shall plug the pipe openings, taking care to securely brace the plugs and the pipe to prevent the pipes from being drawn into the manhole. A vacuum of 10 inches Hg (4.9 psi) shall be drawn, and the vacuum pump shut off. The test shall pass if the vacuum remains at 10-inches of Hg or drops to 9 inches Hg (4.4 psi) in a time greater than one minute.

3. If the manhole fails the initial test, the Contractor shall locate the leak and make proper repairs. Leaks may be filled with a wet slurry of accepted quick setting material. The manhole shall then be retested, repeatedly, if necessary, by the Contractor, until the required conditions are met, at no additional expense to the Owner.

Method of Measurement

A. Manhole – Sanitary Sewer shall be measured for payment by the unit "each" as listed in the Bid. The depth of a unit shall be the total depth from the top of the manhole frame to the invert of the sewer at the center of the manhole.

B. Manhole Frame and Cover – Sanitary Sewer shall be measured for payment by the unit "each" as listed in the Bid.

C. Existing Manhole Frame and Cover Adjustment – Sanitary Sewer shall be measured for payment by the unit “each” as listed in the bid, adjusted to finish grade and accepted.

Basis of Payment

A. The price and payment for Manhole – Sanitary Sewer shall constitute full compensation for furnishing and constructing precast manhole inverts, bases, transition sections, risers, cones, flat tops, , all pipe and pipe fittings and encasements for drop manholes, steps, brick masonry, for furnishing openings and connecting existing sewer pipelines, excavating and backfill, gravel fill, temporary pavement restoration and appurtenant work, for leakage tests complete in place; and for all labor, equipment, tools, materials, and all other costs and appurtenant work incidental and necessary to complete the items as specified, as indicated and as directed by the Owner.

ITEM # 1403001A
ITEM # 1403010A
ITEM # 1403020A

B. The price and payment for Manhole Frame and Cover – Sanitary Sewer shall constitute full compensation for furnishing and constructing cast iron frames and covers, including watertight frames and covers if applicable; and for all labor, equipment, tools, materials, and all other costs and appurtenant work incidental and necessary to complete the items as specified, as indicated and as directed by the Owner.

C. The price and payment for Existing Manhole Frame and Cover Adjustment – Sanitary Sewer shall constitute full compensation for adjusting existing manhole frame and covers to grade, extension/adaptor ring; and for all labor, equipment, tools, materials, and all other costs and appurtenant work incidental and necessary to complete the item as specified, as indicated, and as directed by the Owner.

Pay Item	Pay Unit
Manholes (Sanitary Sewer)	Each
Manhole Frame and Cover (Sanitary Sewer)	Each
Existing Manhole Frame & Cover Adjustment (Sanitary Sewer)	Each

ITEM # 1403001A
ITEM # 1403010A
ITEM # 1403020A

ITEM #1500041.1A P – ELECTRIC DUCTBANK (2X1 CONC. ENCASED) PARTICIPATING

ITEM #1500041.2A P – ELECTRIC DUCTBANK (2X2 CONC. ENCASED) PARTICIPATING

ITEM #1500041.4A P – ELECTRIC DUCTBANK (4X1 CONC. ENCASED) PARTICIPATING

ITEM #1500041.8A P – ELECTRIC DUCTBANK (4X2 CONC. ENCASED) PARTICIPATING

Description:

This work shall consist of the construction of an underground concrete encased conduit system for Eversource Electric and the furnishing and installing of all conduit, appurtenances, and hardware of the type, size and kind indicated on the plans and in the specifications, or as ordered by the Engineer. In addition, work shall include clearing, trenching, disposing of unused excavated materials, concrete, duct plugs, refilling trenches, furnishing additional material for refilling, miscellaneous grading, sheeting, bracing, pumping, as-built documentation, and all incidental work.

Materials:

All materials and work shall meet the Specification for Electric Utility Underground Construction and Maintenance Work for Eversource Electric.

Conduit, PVC, Encased Buried: Conduit shall be encased buried type polyvinyl chloride. Conduit shall have one bell end and meet NEMA TC 6 & 8 - 2003 for EB-20 Conduit. Approved manufacturers are American Pipe and Plastics, Cantex, Carlon, or approved equal.

Bends, Couplings, Adapters, PVC: Conduit fittings shall be encased buried type polyvinyl chloride. Conduit fittings, bends and adapters shall meet the requirements of NEMA TC 9 – 2004. Approved manufacturers are American Pipe and Plastics, Cantex, Carlon, or approved equal.

Cement, Conduit, PVC: Conduit Cement shall be all-weather, quick-set cement for joining PVC conduit. Approved manufacturers are American Pipe and Plastics, Carlon, or approved equal.

Plug, Conduit, Plastic: Plastic Conduit plugs shall be provided for sealing ends of all empty conduits. Approved manufacturers are Carlon, Cooper Power Systems, Kyova, Underground Products Co., or approved equal.

Conduit Spacers: Conduit bank spacers shall be base and intermediate type with plastic construction, installed as indicated on the drawings. Spacers shall provide minimum separation between conduits of 1-1/2" for 3" to 5" conduits and 2" separation between conduits for 6" conduits. Approved manufacturers are Carlon, UG Products, or approved equal.

Concrete: The concrete used to form the envelope shall attain a minimum compressive strength of 2500 psi at the end of 28 days. Course aggregate shall be no larger than ½". Concreting shall follow closely behind the laying of the conduit. Concrete shall be of such consistency that continuous spading will insure the flowing of the concrete between and under the individual plastic conduits, and still not be so wet or sloppy that it will lift or float the conduits out of position. The top of the concrete envelope shall be tamped lightly to insure an even surface.

Fill and Backfill Material:

All fill and backfill material shall be subject to the approval of the Engineer.

Except as noted below, it is the intent that all excavated material with rock size less than 4 inches in greatest dimension shall be used as fill and backfill. Fill shall be free from lumps of clay, debris, organic matter, frozen material and other deleterious substances.

In the event of a deficit of suitable on-site material, imported material may be used. Imported material shall be predominantly sand and gravel mix or bank-run gravel which is free from lumps of clay, organic matter, frozen material and other deleterious substances. It shall contain no rocks or lumps over 4 inches in greatest dimension and not more than 15% of the particles shall be larger than 2 inches in greatest dimension. It shall be well graded between its maximum and minimum particle sizes with not more than 15% by weight passing the No. 200 mesh sieve.

All Fill Materials, either On-Site or Imported, shall comply with all environmental regulations.

Shop drawings, test reports and a certificate of compliance for all materials shall be furnished for approval by the Engineer prior to manufacture.

Construction Methods:

Quality Assurance: Contractor shall use adequate numbers of skilled work-persons who are thoroughly trained and experienced in the necessary crafts and who are completely familiar with the specified requirements and the methods needed for proper performance of the Work.

Contractor shall use equipment adequate in size, capacity, and numbers to accomplish the Work in a safe and timely manner.

Suitable precautions and safeguards shall be used in operating heavy equipment so pavement adjacent to trench areas is not damaged. Any damages to adjacent sidewalk flags, curbs and roadways caused by the Contractor's method of operation are to be restored at no additional cost to the State.

Contractor will be liable for any sunken cut or trenches resulting from deficiencies in backfill compaction or base concrete/binder for a period of two years from date of completion. Sunken cuts or trenches will be re-excavated, re-compacted and re-based at no cost to the State. Repaving shall not result in additional costs to the State. Maintenance of lawn area will be the responsibility of the Contractor until May 1 of the year following completion of the Work.

Lines and Grade: The Contractor will establish and maintain all necessary lines and grades for openings, trenches and piping, including test holes. Any deviations will be brought to the attention of the Engineer for final evaluation and approval. Failure to comply with lines and grades during installation will be at the Contractor's cost for required rework.

Protection: The Contractor shall use all means necessary to identify the location of, and protect during construction, all existing underground utilities, that are to remain. The Contractor shall adhere to all requirements of the Connecticut State, Call Before You Dig (CBYD) Regulations.

The Contractor shall use all means necessary to protect all materials before, during, and after installation and to protect all objects designated to remain.

In the event of damage, the Contractor shall immediately notify the Engineer. The Contractor shall make all repairs and replacements necessary to the approval of the Damaged Facilities Owner's Representative and at no additional cost to the Damaged Facilities Owner or Owner.

The Contractor shall barricade open holes and depressions occurring as part of the Work, and provide for protection of public safety and as otherwise required.

No on-site burning or burying of material spoil or debris is allowed.

Contractor shall maintain access for emergency vehicles to the site at all times.

Earth Excavation: The Contractor shall make all required excavations for the underground facilities.

The Contractor shall excavate to grades shown on the Drawings. Where excavation grades are not shown on the Drawings, excavate as required to accommodate the installation.

Trenches for conduit runs in state highways between curb lines and street lines are to be excavated to a depth necessary to provide a minimum cover of 36 inches over the top of the conduit encasement or as otherwise stated in the specific job specifications. Excavations in sidewalks and other areas within highway limits but outside of curb lines are to be made in

depths such that future highway widening will still leave the minimum specified cover over the installations.

Trench excavation shall not exceed 3 inches on each side of required concrete envelope of conduit bank except in areas authorize by the Engineer.

The excavation shall provide for a minimum 6” clearance from all rocks, boulders, and concrete obstructions.

All Existing Utilities shall be identified, located, protected and adequate clearances shall be maintained.

Removal of boulders, stones, rock, concrete, and masonry removed by normal methods shall be considered earth excavation.

Where depressions result from, or have resulted from, the removal of surface or subsurface obstructions, open the depression to equipment working width and remove all debris and soft material as directed by the Engineer.

The Contractor shall take any and all precautions to prevent undue damage to, or undermining of pavement adjacent to, the trench.

Any preventable damage to structures which result from Contractor’s operations shall be repaired or replaced, as necessary, at Contractor’s expense.

Shoring and Sheeting: Excavations shall be shored, sheeted, braced or sloped to the angle of repose where a danger of slides or cave-in exist as identified by a competent individual in accordance with OSHA, state and local regulations. Sides of trenches in unstable or soft material shall be shored, sheeted, braced, sloped or otherwise supported by means of sufficient strength to protect employees working within them. Materials used for sheeting and sheet piling, bracing, shoring and underpinning shall be sound and in good serviceable condition and shall be installed and effective to the bottom of excavation.

Trenches for conduit runs will also be excavated so that the conduits pitch uniformly at a minimum pitch of 4 inches per hundred feet toward vaults, manholes, or service boxes.

Existing Underground Utilities and Facilities: Contractor shall not alter or remove any portion of interfering surface, or subsurface structures until approval is obtained from the Engineer, who will obtain permission for such alterations. Contractor shall properly support and protect surface and subsurface structures. The Engineer will decide whether Contractor shall eliminate interfering structures.

Upon approval by the Engineer, the Contractor shall be responsible for relocating existing underground facilities within his excavation and proceed with his Work in such a manner as not to damage or disturb such facilities. Where an energized or deenergized conductor is to be exposed, its exact location shall be determined by careful hand excavation to prevent damage to existing conductors.

Any damages to existing underground facilities caused by the Contractor in the performance of his Work will be paid for by the Contractor.

All water, gas, or other pipes, mains, services, conduits, or fixtures which may be uncovered or interfered with, and any excavations made in connection with this specification shall be properly supported and maintained in position. Backfill shall be installed around foreign utilities in such a manner as to maintain support and prevent settlement.

Where tiers of conduit have to be separated for the passage of foreign pipes, 3" in diameter or less, such pipes shall be encased with a suitable material authorized by the Engineer of a diameter approximately twice that of the foreign pipe.

The encasing material is to be covered with cement mortar or concrete of a thickness sufficient to leave a permanently strong concrete shell around the pipe. The conduit lines will be split around the foreign pipe by gradually grading with concrete between the conduit layers.

Where clearances around existing pipes are to be other than as above, the Contractor will be so informed by the Engineer.

Excess Water Control: Do not place, spread, or roll fill material during unfavorable weather conditions. Do not resume operations until moisture content and fill density are satisfactory to the Engineer.

Provide adequate means to prevent flooding of sub-grade excavations. Promptly remove all water collecting in depressions.

Where soil has been softened or eroded by flooding or placement during unfavorable weather, remove all damaged areas and re-compact as specified for fill and compaction below.

Contractor shall provide necessary personnel and pumping equipment to properly dewater all excavated trenches, openings and existing structures and shall keep them free of water during such time as Work is being performed by the Contractor. Contractor shall keep all gutters and drains clear and open to prevent flooding of adjacent property. No separate payments will be made, unless agreed on prior to commencement of Work, for providing and maintaining temporary drainage, removing frozen earth or for any Work required resulting from rain, snow, freezing temperatures or other conditions caused by weather.

Fill, Backfill, And Compaction: Backfilling shall commence only when directed by the

Engineer.

When state or local regulations do not permit the use of the excavated material for backfill or when the excavated material is deemed unsuitable for backfill by the Engineer, additional approved material required to complete the backfill will be supplied by the Contractor.

The first twelve (12) inches of backfill over the ductbank shall be sand or fill which contains no material or stones larger than two (2) inches in maximum dimension.

Imported fill shall be well-graded sand or gravel with a high mineral content in order to facilitate dissipation of heat which can build up in heavily loaded cables.

The Contractor shall not use any kind of acid-producing material as backfill in a conduit trench under any circumstances.

All backfill shall be placed in lifts no greater than 6” in depth and be thoroughly compacted with a mechanical vibrating compactor so as to prevent settlement of pavement after completion.

The backfill material shall be compacted by mechanical means to a density of at least 95% of the maximum density obtained in the standard compaction test (ASTM D1557).

Water or aerate the fill material as necessary, and thoroughly mix to obtain a moisture content which will permit proper compaction.

Frozen Material shall not be placed in fills nor shall the fill be placed on frozen material. If during construction of a fill, the top layer becomes frozen, the frozen material shall be removed before a succeeding layer of material is placed. Frozen excavated material which will be suitable when dry shall be allowed to thaw and to dry before being placed.

Duct Bank Installation – General:

Conduit bank spacers shall be installed at a maximum of 8-foot intervals and at both sides of horizontal bends.

The Contractor shall install and furnish a pull rope in each conduit, terminating 12 inches behind the conduit ends. The rope shall be 3/32-inch diameter polyethylene braided.

Bends in conduit runs shall be made by gradually bending EB conduit using a minimum of a 15-foot radius.

Conduit Installation at Manholes: Conduits shall be installed level and perpendicular to the manhole. The conduits shall enter the manhole at designated windows only, with belled ends placed flush with the inside face of the knockout. No deviation shall be made without the approval of the Engineer.

All conduits will be laid so as to pitch uniformly to manholes, vaults, or service boxes so that no sags or pockets are formed in the conduit line.

Cutting Conduit: Cut conduit square with a hand saw, power saw, or rotary cutter. Remove the burs left by sawing and the ridges left by a rotary cutter with a knife or file. Break all sharp edges on the exterior and interior surface of the conduit at the cut, with a knife, file, or other beveling tool to prevent possible damage to the hands during handling and prevent damage to cable coverings during subsequent cable pulls.

Cleaning Joined Surfaces: Surfaces to be joined shall be clean and dry before application of the cement. Clean the outside surface of the duct spigot (for the depth of the socket), and the inside surface of the socket with a clean dry cloth.

Cementing Conduit Joints: Observe the Manufacturer's label instructions for PVC cement application methods and handling safety precautions.

Cements should be applied with a natural bristle or nylon brush or roller applicator of appropriate size to easily and rapidly coat the surfaces to be joined. As a guide, a brush width at least ½ the nominal conduit size is recommended, except that with 6" or larger conduit, a 2½" brush width is adequate.

Solvent cements are fast drying and should be applied as quickly as possible consistent with good workmanship.

- PVC cement shall be evenly applied to the outside surface of the conduit spigot. PVC Cement shall not be applied to the inside surface of the conduit socket.

- Immediately, while the spigot surface is still wet with cement, insert the duct spigot with a slight twisting motion into the socket until it bottoms home at the socket shoulder. Do not twist or turn the duct after it has bottomed on the shoulder. The slight twisting motion used during insertion helps to distribute the cement evenly, but if twisted after bottoming, the initial bond could be impaired.

- Assembly of a cemented joint should be completed within 15 seconds after the last application of cement to ensure a solid connection. Initial bonding begins immediately when the cement-coated surfaces are in position.

- If there is any sign of drying of the cement surfaces prior to assembly, due to delay in assembly, recoat the conduit spigot with a heavy even coat of cement and immediately, while cement is still wet, insert the spigot into the socket.

- After assembly, wipe excess cement from the duct at the end of the socket, to prevent excessive cement from dropping on and possibly weakening other ducts.

Conduit Identification: Each end of the conduits shall be marked, with its identification number, on the exterior surface of the conduit.

Concrete Envelop – General: Conduit shall be installed with a minimum cover over the top of the concrete envelope for the installation location in accordance with the drawings.

The surface of the concrete, perpendicular to the longitudinal forms, at the end of a pour, shall not be terminated in a vertical plane as obtained by the use of an end form. The concrete at the end of a pour shall be sloped at an angle corresponding approximately to its angle of repose and the surface shall be made rough to facilitate bond with the next pour.

Concrete encasement of conduit bank shall not be tied into boulders, stones, rock, concrete, and masonry adjacent to the excavation.

A 2” minimum sand interface shall be used on the bottom of the trench and along the sides of the conduit bank to eliminate the possibility of bond between the concrete and rock face.

Concrete Envelop – Tier Method of Installation: The tier method of conduit installation shall be in a previously excavated and prepared trench, free of stones and sufficiently level to prevent dips or depressions in the duct bank.

A no-slump mixture of concrete, placed directly from the mixer, shall be spread on the bottom of the trench to a depth of 3", raked, and compacted with a wood tamp to provide a level work area. The concrete used for encasement shall attain a 28-day compressive strength of 2500 psi and shall have a maximum aggregate size of ½ ".

Conduit, inspected and clean, shall be laid on the prepared base with staggered ends and a spacing of 2" between conduits and between conduit and side walls of trench.

Concrete placed directly from the mixer shall be spread over and spaded between conduits.

Additional concrete shall be laid to a depth sufficient to provide a vertical separation of 2" of compacted concrete to the next layer of conduit.

Concrete shall be tamped, and the next layer of conduit set in place.

The complete concrete envelope shall provide a 3" base, 2" side, and a 3" cap of compacted, no-slump concrete. All measurements are from the OD of the conduit. All joints shall be staggered at least 6" both horizontally and vertically. Bends, other than standard 45 or 90°, shall be formed by the use of angle couplings, 5° bend sections and short pieces of conduit arranged to provide the radius or sweep as shown on drawings or as directed by the Engineer. If spacers are needed

for any reason, concrete brick shall be used. Wood spacers or combs, if used, must be removed and voids filled with concrete.

Concrete Envelop – Monolithic Pour Method of Installation: Monolithic method of conduit installation may be used on runs not more than eight (8) conduits with a concrete slump of 6 - 9 inches. Conduit shall be spaced as previously described using plastic spacers and secured to prevent it from floating during pour or until after initial set of concrete has taken place. Forms shall be used to obtain the 2” side cover of concrete.

The width of the concrete envelope corresponds to the total width of the spacers, plus 1½” on each side of the envelope.

The total height of the concrete envelope for the conduits corresponds, in even inches, to the total depth of the conduit spacers, with the spacer base resting on the ground. The top of the envelope shall be flush with the top of the uppermost spacer.

Conduit runs of more than eight (8) ducts shall not be poured monolithically without the approval of the Engineer.

It is important that the bottom tier of conduits does not bear the weight of all the upper conduit tiers. Every spacer shall be locked to the adjacent spacers. Some spacers provide vertical openings on either side of the spacer bank through which reinforcing rods can be passed and driven into the trench floor sufficiently to grip the spacer bank, and thus prevent the duct bank from moving in any direction during the concrete pour. In areas where soil conditions make it impossible to drive a rod deep enough to gain an effective anchoring, it is recommended that a trench jack be firmly placed directly over the spacer location and adjustable wedges be used to wedge down the duct bank.

Placement of Conduit Bank Protection: A 12” thick layer of backfill over the ductbank shall be sand or fill which contains no material or stones larger than two (2) inches in maximum dimension.

The sand may be installed before the concrete has cured, but no compaction shall be allowed within 24-hours of pour.

Contractor shall install a continuous warning tape supplied by CL&P, immediately above the sand layer.

Each end of the conduit, including the ends within the manhole, shall be sealed with a conduit plug. Pull ropes shall be secured to the conduit plug.

Protection of Stubbed Conduits: The free ends of all conduits in trenches are to be firmly plugged when the Work is left at night. These plugs are to be left permanently in place at ends of all conduits not terminating in a manhole, vault, or service box.

Cleaning and Internal Inspection of Duct Lines: All conduits in manhole duct systems are to be rodded after completion of the installation with test mandrels in the presence of the Engineer. All conduits will be brushed clean with a stiff wire brush before mandrels are passed through. These mandrels must pass freely through the installed conduit. Pull lines are to be left in conduits after rodding. All mandrels, brushes, and other rodding equipment are to be furnished by the Contractor. Mandrels are to be ¼" less diameter than the inside diameter of the conduit and are to be a minimum of 12" long, except that 4" long mandrels may be used for radius bends.

Final Preparation of Sub-Grade in Pavement Area: After the site has been excavated, thoroughly moisture condition and compact to the requirements specified below.

Remove all ruts, hummocks, and uneven surfaces by surface grading prior to placement of base material.

Compact areas to be covered with bituminous concrete paving to a smooth, hard, even surface of 95% optimum density (ASTM D1557).

No Work shall be performed on saturated or frozen sub-grade.

Restoration of Disturbed Surfaces: The Contractor is responsible for the cleanup and restoration of the Work area to its original condition, subject to approval by the Engineer.

As directed by Engineer, or as required by state or local regulations, Contractor shall, after backfilling all trenches and openings, furnish, deliver, and immediately install temporary pavement to the grade of the existing surface to ensure the public's safety or access to private property. When Contractor is ordered to install permanent paving base, all temporary pavement, broken pieces of pavement, or other materials with which trenches and openings have been temporarily surfaced or backfilled shall be removed and disposed.

All treated areas shall be allowed to cure until such time as the Engineer permits their opening to traffic.

Roadways, Curbs, Walks and Adjacent Properties

- The Contractor will repave and resurface, in accordance with state or local regulations, (i.e. CDOT 818), all bituminous and/or concrete streets, alleys, and driveways disturbed by the Work performed under this contract, including that pavement replacement required by state or local regulations for cutbacks around excavations.

- Replacing pavements up to a cutback of one foot on all sides of the authorized excavation will be included in the installed cost for underground facilities.

- Pavement replacement beyond the one-foot cutback must be authorized by the Engineer.

- Curbing disturbed or removed in the process of installing the underground facilities shall be repaired or replaced to original condition.

- Any unnecessary damage to roadways, sidewalks, curbs, or adjacent property, as determined by the Engineer to have been caused by the Contractor's carelessness or to serve his convenience, will be repaired by the Contractor at his expense.

Grass, sod and shrubbery shall be restored or replaced. Where Work requires, the Contractor shall remove and restore or replace shrubs, sod, topsoil, terraces, trees (root systems or branches shall not be disturbed or removed unless approved by the agency having jurisdiction), etc., and any other landscaping that may be disturbed due to installation of the facilities as directed by the Engineer. Work site shall be restored to its original condition satisfactory to the Engineer. When established lawns are disturbed, sod shall be removed carefully and set aside for reuse whenever possible. Contractor shall also maintain, replace and restore grounds in a condition satisfactory to authorities and person(s) having jurisdiction until May 1 of the year following completion of the Work.

Drawings: All subsurface drawings furnished are supplied to provide only general information regarding existing subsurface conditions. Elevations and covers over facilities shown thereon have been obtained from records. Actual conditions may vary from those shown. Drawings typically do not show all existing facilities such as general services, laterals, etc., crossing or parallel with proposed trenches. Actual elevations at which facilities will be installed and cover placed over such facilities will be determined from conditions disclosed by test pits which the Contractor shall make at various locations upon request of Engineer.

As-Built Drawings: The Contractor shall provide signed as-built drawings to the University of Connecticut within 14 days following completion. As-built drawings shall reflect all field changes that occurred during the installation. As-built drawings shall reference dimensions to known fixed points to locate facilities.

Method of Measurement:

This work will be measured for payment by the actual number of linear foot of ductbank, complete and accepted, and measured in place along the centerline of ductbank.

Basis of Payment:

This work will be paid at the contract unit price per linear foot for “Concrete Encased Utility Conduit” of the appropriate size, complete in place including all necessary hardware and appurtenances.

The price shall include the cost of digging test pits, transporting the materials, clearing, trenching, disposing of excavated materials, concrete, duct plugs, furnishing and installing the of conduit including fittings, refilling trenches, furnishing additional material for trench refilling, grading, sheeting, bracing, pumping, as-built documentation, and all incidental work, except as otherwise herein provided for.

Pay Item	Pay Unit
Electric Ductbank (2 X 2 Conc. Encased) Participating	LF
Electric Ductbank (2 X 2 Conc. Encased) Non- Participating	LF
Electric Ductbank (4 X 1 Conc. Encased) Participating	LF
Electric Ductbank (4 X 2 Conc. Encased) Participating	LF

ITEM #1500046A P – TEL/DATA DUCTBANK (2X1 CONC. ENCASED) PARTICIPATING

ITEM #1500046A NP – TEL/DATA DUCTBANK (2X1 CONC. ENCASED) NON-PARTICIPATING

Description:

This work shall consist of the construction of an underground concrete encased conduit system for telecommunications and the furnishing and installing of all conduit, appurtenances, and hardware of the type, size and kind indicated on the plans and in the specifications, or as ordered by the Engineer. In addition, work shall include clearing, trenching, disposing of unused excavated materials, concrete, reinforcing bars, tracer wire, utility marker ball, muletape, duct plugs, refilling trenches, furnishing additional material for refilling, miscellaneous grading, sheeting, bracing, pumping, as-built documentation, and all incidental work.

Materials:

All materials and work shall meet the Telecommunications Standards.

Non-Metallic Conduit: Rigid Polyvinyl Chloride Conduit (PVC), Telephone Duct Type-C, designed for direct burial or concrete encasement applications; RUS listed, meets or exceeds the requirements of NEMA TC-10 and Bellcore CAO 8546. Fittings shall match requirements for conduit.

Conduit Spacers: Carlon "SNAP-N-STACK" SP4W20-2 or equal. Spacers shall maintain a minimum 2" wall-to-wall separation of conduits in all directions and elevate bottom conduits a minimum 3" above trench floor. Maximum spacing between spacers: 7'-0"

Concrete: Encase conduits in concrete having nominal compression strength of 2500lbs/sq.in, with 3/8" maximum aggregate crush stone or washed gravel. (Concrete slump size: 6" min., 8" max.).

Tracer Wire: Minimum - #12AWG solid copper conductor insulation type UL listed THWN (Gas & Oil Resistant).

Utility Marker Ball: 3M™ EMS 4" Extended Range 5' Ball Marker - Telephone 1401-XR or approved equal.

Muletape: Flat, woven, polyester tape with a pulling strength of 1250lbs. Pre-lubricated for easy pulling and durably printed with sequential footage markings (Neptco or equal).

Duct Plugs: Blank duct plugs made of corrosion resistant high-impact plastic. Center washer expands when tightened to prevent water and sediment infiltration; provided with eyelet to secure pull rope (Tyco Electronics “Jack Moon” or equal).

Native Backfill: Native backfill shall consist of granular soil excavated on site meeting the approval of the Engineer. Materials shall be of such a nature that they will form a stable dense fill. Materials shall not contain stones larger than 6-inch, vegetation, masses of roots, individual roots more than 12-feet long or more than ½-inch in diameter, trash, clays, or plastic fines. Organic matter shall not exceed two percent (2%). Non-plastic fines (silts) shall not exceed 20 percent (20%).

Shop drawings, test reports and a certificate of compliance for all materials shall be furnished for approval by the Engineer prior to manufacture.

Construction Methods:

Duct Banks: All Duct Banks shall be constructed of concrete encased non-metallic conduit. All bends shall have a minimum radius of 36 inches. Utilize manufactured bends where ever possible. Where bends are performed in the field, protect conduits against kinks or distortion of shape.

Ducts shall not enter the manhole in the cover chimney.

Conduits shall enter manholes perpendicular to the wall.

Utilize installed TERMADUCTS for all conduits entering the manhole wherever possible. Populate the lowest knock-outs available to allow for future expansion. Conduits shall be installed flush with the interior wall of the manhole and shall not protrude into the interior space.

Splay all conduits entering the narrow wall of Telecommunication Manholes. Equally separate duct banks so that half the conduits will enter near the left corner of the narrow wall and the other half will enter near the right corner of the same narrow wall. The splaying of the conduits should start at least 20' from the manhole. Service lateral ducts are not required to be splayed.

Where possible, organize conduits in such a manner as to provide "in-line" or "pull-through" cable installations.

Provide #6 X 12" steel reinforcing bars inserted into manhole walls prior to concrete encasement of duct bank.

At all road and driveway crossings the duct bank concrete shall be reinforced with engineer designed steel reinforcement.

Patch walls around conduit entrances with hydraulic cement or watertight grout to prevent water infiltration. Seal all conduit entrances into a below grade building space with a mechanical modular sealing system (Link Seal® or equal).

Cement all non-metallic conduit joints using a PVC primer and solvent cement.

All underground conduits shall be encased in concrete. Work concrete to remove all trapped air and insure each conduit is completely surrounded by a minimum 2" of concrete. Allow concrete to cure for at least one hour before backfilling.

Seal all conduit ends with blank duct plugs. Secure Muletape to duct plug.

Clearing Trees and Bushes: No trees within streets and highways, or adjacent to the normal trench therein, shall be damaged or removed. In streets and highways where there is no permanent paving, the Contractor shall, unless otherwise directed, remove and dispose of only those trees, bushes or shrubs required for construction and approved by the Engineer. The unlimited removal of trees and brush will generally not be required or permitted. All trees, bushes or shrubs which are not to be removed shall be preserved and protected by the Contractor. Should any trees, bushes or shrubs, which are to be preserved and protected, become damaged by the conduct of the work, the Contractor shall replace them at his own expense. Brush, small branches, trash, large trunks, stumps and all other surplus material and debris shall be removed from the site of the work.

Trenching: Prior to any excavation, the Contractor shall notify all affected utilities in accord with Public Act 77-350 (CALL BEFORE YOU DIG 1-800-922-4455).

The trench width shall conform to the width specified on the Contract Drawings. The Contractor alone shall be responsible for the stability and safety of the trench and adjacent structures, pipes, poles, etc., and shall use such trench support and bracing as necessary without additional payment therefore. No direct payment will be made for cutting and patching pavement, but the cost of such work will be considered as having been included in the price bid per foot of ductbank.

The Contractor may be required to excavate locally to determine the location and depth of existing underground structures on the lines of the ductbank well in advance of the conduit laying. There will be no additional payment for this work, including backfilling and temporary surfacing.

Sheeting, Bracing and Pumping: The Contractor shall furnish and put in place such sheeting and bracing as may be necessary, to support the sides of the excavation, to prevent undermining of the pavement or to protect from possible injury any pipes, sewers, ducts, poles, conduits or other structures existing in the streets, or highways, and shall remove such sheeting and bracing as the trench is refilled unless the Engineer shall order it left in place.

The Contractor shall maintain all excavations in proper condition for carrying on the work, and to this end shall do all bailing, draining, or pumping which may be necessary to keep the trenches or other excavations free of water. No direct payment will be made for this work but the cost thereof will be considered as having been included in the price bid per linear feet of ductbank.

Protection of Pipes, Drains, Culverts, etc.: All existing gas pipes, water pipes, sewers, drains, manholes, catch basins, culverts, electrical conduits, telephone ducts, utility poles or other structures which are uncovered by the excavation, and which do not, in the opinion of the Engineer, require to be changed in location, shall be carefully supported and protected from injury by the Contractor; and in case of damage, they shall be restored by him without compensation; therefore, to as good condition as that in which they were found and shall be kept in repair during the existence of this Contract.

Backfill: Provide a tracer wire on top and along the centerline of duct bank.

The first 12" of fill shall be sand or other granular material tamped using lightweight equipment such as pneumatic or vibrating tampers.

Install Utility Marker Balls above duct bank at intervals not exceed 50' when duct bank is in a straight line. Shorten intervals as appropriate to accurately identify changes in direction.

Place backfill in layers not exceed 6". Thoroughly compact each layer.

Place a plastic marking tape above the duct bank and 12" below finished grade. The plastic tape shall be durable and orange in color clearly indicating that there is a buried Telecommunications Utility Structure below.

Restoration: Cut back all concrete and bituminous concrete surfaces 1'-6"

Restore all disturbed footpaths, walkways, sidewalks, driveways and roadways to match the details and typical sections in the Contract Documents.

Testing and As-Built Documentation: Rod and mandrel each conduit and provide a 1250lbs test fabric "Muletape" with distance markings.

Utilizing a 3M "Dynatel" locating tool or approved equal, identify the duct bank's path by both tracer wire and marker ball methods. The University ITS project manager must be present for this test.

Provide as-built Autodesk AutoCAD drawings to the University of Connecticut that accurately provide the following information:

- The installed duct bank's location
- Callouts showing a cross-section detail of each duct bank segment
- Wall-to-wall conduit distances

- Triangulation reference distances from permanent landmarks to points along the duct bank to identify location, changes in direction, changes in configuration, and termination
- GIS coordinates of each Utility Marker Ball location along the duct bank's path

Method of Measurement:

This work will be measured for payment by the actual number of linear foot of ductbank, complete and accepted, and measured in place along the centerline of ductbank.

Basis of Payment:

This work will be paid at the contract unit price per linear foot for "Concrete Encased Utility Conduit" of the appropriate size, complete in place including all necessary hardware and appurtenances.

The price shall include the cost of digging test pits, transporting the materials, clearing, trenching, disposing of excavated materials, concrete, reinforcing bars, tracer wire, utility marker ball, muletape, duct plugs, furnishing and installing the of conduit including fittings, refilling trenches, furnishing additional material for trench refilling, grading, sheeting, bracing, pumping, as-built documentation, and all incidental work, except as otherwise herein provided for.

Pay Item	Pay Unit
Tel/Data Ductbank (2x1 Conc. Encased) Participating	LF
Tel/Data Ductbank (2x1 Conc. Encased) Non-Participating	LF

ITEM #1500175A – ELECTRIC VAULT NON-PARTICIPATING

Description: This work shall consist of the construction of underground precast electric vaults for Northeast Utilities and the furnishing and installing of all appurtenances, and hardware of the type, size and kind indicated on the plans and in the specifications, or as ordered by the Engineer. In addition, work shall include clearing, trenching, disposing of unused excavated materials, refilling trenches, furnishing additional material for refilling, miscellaneous grading, sheeting, bracing, pumping, as-built documentation, and all incidental work.

Materials:

All materials and work shall meet Eversource specifications and standards.

Precast Concrete Vault: Approved manufacturers are Arrow CPI, Rotundo, or approved equal and shall meet the following requirements:

- Manhole shall be designed for the following loads:
  - The roof shall be designed for AASHTO HS20 direct wheel load.
  - The walls shall be designed for the summation of the following:
    - Soil pressure of not less than an equivalent fluid pressure of 33 pcf.
    - Hydrostatic pressure of 5 feet measured from the base of the manhole.
    - A surcharge of 2.5 feet of soil weighing 120 pcf.
    - The floor shall be designed to resist the hydrostatic pressure resulting from the 5–foot head.

- Concrete and concrete design shall be in accordance with ACI 318.

- Concrete shall have a minimum and maximum 28–day strength of 4000 and 5000 psi respectively.

- Steel reinforcing bars shall conform to ASTM A615 Grade 40 or 60. Welded wire mesh shall conform to ASTM A185 or A497.

- Pulling eyebolts, with a minimum 8000–pound pulling strength, shall be installed adjacent to window knockouts, eight places.

- Zinc alloy inserts 1/2 inch – 13 x 1–1/2 inch shall be installed at 48 places.

- Openings and knockouts shall be clear of reinforcement.

- Construction joint shall be sealed with asphalt cement or equivalent.

- Manufacturer's identification and month/year when manufactured shall be legibly marked in/on concrete in the side of the 38–inch opening.

- Stanchions and racks as indicated on Drawings.

- Protective coating material: two coats of 15 mil coal tar epoxy, factory applied to manhole exterior.

- Access Hole - 38" opening centered on roof as depicted on the Contract Drawings.

- Ground: - Copperweld Sealed bare copper ground rod # 4/0 in 35' minimum lengths, 1/0, tinned copper, 4/0 tinned copper, 5/8" x 6' galvanized ground rod with ground connector. 4/0 - 4 way compression branch connectors. Provide grounding system with all other appurtenances as required or as depicted on the Contract Drawings or recommended by CL&P for a complete installation

Frame, Manhole, Gray Cast Iron, Heavy Duty: Approved manufacturers are Campbell, LeBaron, Neehah, or approved equal and shall meet the detail per the Contract Documents.

Cover, Manhole, Gray Cast Iron, Heavy Duty: Approved manufacturers are Campbell, LeBaron, Neehah, or approved equal and shall meet the detail per the Contract Documents.

Extension, Manhole, Concrete, Precast: Manhole extensions shall be constructed of concrete with a 38" inner diameter and 50" outside diameter. The extension rings shall be constructed in segments of ¼ of a circle. The height of the extension shall be two (2) inches or four (4) inches and shall be manufactured by Rutundo or approved equal.

Fill and Backfill Material:

All fill and backfill material shall be subject to the approval of the Engineer.

Except as noted below, it is the intent that all excavated material with rock size less than 4 inches in greatest dimension shall be used as fill and backfill. Fill shall be free from lumps of clay, debris, organic matter, frozen material and other deleterious substances.

In the event of a deficit of suitable on-site material, imported material may be used. Imported material shall be predominantly sand and gravel mix or bank-run gravel which is free from lumps of clay, organic matter, frozen material and other deleterious substances. It shall contain no rocks or lumps over 4 inches in greatest dimension and not more than 15% of the particles shall be larger than 2 inches in greatest dimension. It shall be well graded between its maximum and minimum particle sizes with not more than 15% by weight passing the No. 200 mesh sieve.

All Fill Materials, either On-Site or Imported, shall comply with all environmental regulations.

Shop drawings, test reports and a certificate of compliance for all materials shall be furnished for approval by the Engineer prior to manufacture.

Construction Methods:

Quality Assurance: Contractor shall use adequate numbers of skilled work-persons who are thoroughly trained and experienced in the necessary crafts and who are completely familiar with the specified requirements and the methods needed for proper performance of the Work.

Contractor shall use equipment adequate in size, capacity, and numbers to accomplish the Work in a safe and timely manner.

Suitable precautions and safeguards shall be used in operating heavy equipment so pavement adjacent to trench areas is not damaged. Any damages to adjacent sidewalk flags, curbs and roadways caused by the Contractor's method of operation are to be restored at no additional cost to the State.

Contractor will be liable for any sunken cut or trenches resulting from deficiencies in backfill compaction or base concrete/binder for a period of two years from date of completion. Sunken cuts or trenches will be re-excavated, re-compacted and re-based at no cost to the State. Re-paving shall not result in additional costs to the State. Maintenance of lawn area will be the responsibility of the Contractor until May 1 of the year following completion of the Work.

Lines and Grade: The Contractor will establish and maintain all necessary lines and grades for openings, trenches and piping, including test holes. Any deviations will be brought to the attention of the Engineer for final evaluation and approval. Failure to comply with lines and grades during installation will be at the Contractor's cost for required rework.

Protection: The Contractor shall use all means necessary to identify the location of, and protect during construction, all existing underground utilities, that are to remain. The Contractor shall adhere to all requirements of the Connecticut State, Call Before You Dig (CBYD) Regulations.

The Contractor shall use all means necessary to protect all materials before, during, and after installation and to protect all objects designated to remain.

In the event of damage, the Contractor shall immediately notify the Engineer. The Contractor shall make all repairs and replacements necessary to the approval of the Damaged Facilities Owner's Representative and at no additional cost to the Damaged Facilities Owner or Owner.

The Contractor shall barricade open holes and depressions occurring as part of the Work, and provide for protection of public safety and as otherwise required.

No on-site burning or burying of material spoil or debris is allowed.

Contractor shall maintain access for emergency vehicles to the site at all times.

Earth Excavation: The Contractor shall make all required excavations for the underground facilities.

The Contractor shall excavate to grades shown on the Drawings. Where excavation grades are not shown on the Drawings, excavate as required to accommodate the installation.

The excavation shall provide for a minimum 6” clearance from all rocks, boulders, and concrete obstructions.

All Existing Utilities shall be identified, located, protected and adequate clearances shall be maintained.

Removal of boulders, stones, rock, concrete, and masonry removed by normal methods shall be considered earth excavation.

Where depressions result from, or have resulted from, the removal of surface or subsurface obstructions, open the depression to equipment working width and remove all debris and soft material as directed by the Engineer.

The Contractor shall take any and all precautions to prevent undue damage to, or undermining of pavement adjacent to, the trench.

Any preventable damage to structures which result from Contractor’s operations shall be repaired or replaced, as necessary, at Contractor’s expense.

Shoring and Sheeting: Excavations shall be shored, sheeted, braced or sloped to the angle of repose where a danger of slides or cave-in exist as identified by a competent individual in accordance with OSHA, state and local regulations. Sides of trenches in unstable or soft material shall be shored, sheeted, braced, sloped or otherwise supported by means of sufficient strength to protect employees working within them. Materials used for sheeting and sheet piling, bracing, shoring and underpinning shall be sound and in good serviceable condition and shall be installed and effective to the bottom of excavation.

Existing Underground Utilities and Facilities: Contractor shall not alter or remove any portion of interfering surface, or subsurface structures until approval is obtained from the Engineer, who will obtain permission for such alterations. Contractor shall properly support and protect surface and subsurface structures. The Engineer will decide whether Contractor shall eliminate interfering structures.

Upon approval by the Engineer, the Contractor shall be responsible for relocating existing underground facilities within his excavation and proceed with his Work in such a manner as not to damage or disturb such facilities. Where an energized or deenergized conductor is to be exposed, its exact location shall be determined by careful hand excavation to prevent damage to existing conductors.

Any damages to existing underground facilities caused by the Contractor in the performance of his Work will be paid for by the Contractor.

All water, gas, or other pipes, mains, services, conduits, or fixtures which may be uncovered or interfered with, and any excavations made in connection with this specification shall be properly supported and maintained in position. Backfill shall be installed around foreign utilities in such a manner as to maintain support and prevent settlement.

Excess Water Control: Do not place, spread, or roll fill material during unfavorable weather conditions. Do not resume operations until moisture content and fill density are satisfactory to the Engineer.

Provide adequate means to prevent flooding of sub-grade excavations. Promptly remove all water collecting in depressions.

Where soil has been softened or eroded by flooding or placement during unfavorable weather, remove all damaged areas and re-compact as specified for fill and compaction below.

Contractor shall provide necessary personnel and pumping equipment to properly dewater all excavated trenches, openings and existing structures and shall keep them free of water during such time as Work is being performed by the Contractor. Contractor shall keep all gutters and drains clear and open to prevent flooding of adjacent property. No separate payments will be made, unless agreed on prior to commencement of Work, for providing and maintaining temporary drainage, removing frozen earth or for any Work required resulting from rain, snow, freezing temperatures or other conditions caused by weather.

Fill, Backfill, And Compaction: Backfilling shall commence only when directed by the Engineer.

When state or local regulations do not permit the use of the excavated material for backfill or when the excavated material is deemed unsuitable for backfill by the Engineer, additional approved material required to complete the backfill will be supplied by the Contractor.

Imported fill shall be well-graded sand or gravel with a high mineral content in order to facilitate dissipation of heat which can build up in heavily loaded cables.

The Contractor shall not use any kind of acid-producing material as backfill in a conduit trench under any circumstances.

All backfill shall be placed in lifts no greater than 6” in depth and be thoroughly compacted with a mechanical vibrating compactor so as to prevent settlement of pavement after completion.

The backfill material shall be compacted by mechanical means to a density of at least 95% of the maximum density obtained in the standard compaction test (ASTM D1557).

Water or aerate the fill material as necessary, and thoroughly mix to obtain a moisture content which will permit proper compaction.

Frozen Material shall not be placed in fills nor shall the fill be placed on frozen material. If during construction of a fill, the top layer becomes frozen, the frozen material shall be removed before a succeeding layer of material is placed. Frozen excavated material which will be suitable when dry shall be allowed to thaw and to dry before being placed.

Precast – General: Precast manholes and vaults shall be installed by the Contractor in a hole which has been previously excavated and prepared.

Location shall be as indicated on the drawings and shall be changed only by the Engineer to eliminate conflicts with other utilities.

Excavation for precast items shall not exceed 1’-6” outside neat lines of concrete unless authorized by the Engineer and excavation is to be to a depth sufficient to provide 6" maximum neck on manhole

A 6" base of crushed stone to properly prepare the base of the hole shall be provided

Standard ground wire will be placed with sufficient length under manhole before placement on prepared base. Six foot (72") ends are to be brought into both ends of manhole. Ground wire shall be one continuous piece.

The Contractor shall back fill the excavation and set manhole cover casting, vault grating, or other hardware after the Engineer has acknowledged acceptance of the installed precast manhole or vault by the supplier.

The backfill shall be accepted material and shall be compacted by mechanical means of methods approved by Engineer to prevent settlement of pavement after completion.

Manhole Installation: The Contractor shall coordinate the delivery and installation of the pre-cast concrete manholes in the pits. It will be the responsibility of the Contractor to supervise the placement of the pre-cast items for proper elevation and orientation. The bottom of the excavation shall be level and adequately tamped to prevent settlement.

The Contractor shall install the manhole cover and cover extension as required. The Contractor shall furnish the material for the cover extension. All extension must be adequate for AASHTO HS20 Loading.

The Contractor shall comply with provisions of the drawings for grounding. Grounds must be brought through the manhole window at opposite ends, allowing for minimum 6’ tail inside the manhole.

Cleaning and Pointing of Precast Items: The Contractor shall point up all conduits entering precast items to ensure a smooth, clean face recessed 3 inches from the interior walls of the item.

The Contractor shall leave the interior of all precast items free from excess concrete, lumber, or other debris.

Roadways, Curbs, Walks and Adjacent Properties

- The Contractor will repave and resurface, in accordance with state or local regulations, (i.e. CDOT 816), all bituminous and/or concrete streets, alleys, and driveways disturbed by the Work performed under this contract, including that pavement replacement required by state or local regulations for cutbacks around excavations.

- Replacing pavements up to a cutback of 1'-6" on all sides of the authorized excavation will be included in the installed cost for underground facilities.

- Pavement replacement beyond the one-foot cutback must be authorized by the Engineer.

- Curbing disturbed or removed in the process of installing the underground facilities shall be repaired or replaced to original condition.

- Any unnecessary damage to roadways, sidewalks, curbs, or adjacent property, as determined by the Engineer to have been caused by the Contractor's carelessness or to serve his convenience, will be repaired by the Contractor at his expense.

Grass, sod and shrubbery shall be restored or replaced. Where Work requires, the Contractor shall remove and restore or replace shrubs, sod, topsoil, terraces, trees (root systems or branches shall not be disturbed or removed unless approved by the agency having jurisdiction), etc., and any other landscaping that may be disturbed due to installation of the facilities as directed by the Engineer. Work site shall be restored to its original condition satisfactory to the Engineer. When established lawns are disturbed, sod shall be removed carefully and set aside for reuse whenever possible. Contractor shall also maintain, replace and restore grounds in a condition satisfactory to authorities and person(s) having jurisdiction until May 1 of the year following completion of the Work.

Drawings: All subsurface drawings furnished are supplied to provide only general information regarding existing subsurface conditions. Elevations and covers over facilities shown thereon have been obtained from records. Actual conditions may vary from those shown. Drawings typically do not show all existing facilities such as general services, laterals, etc., crossing or parallel with proposed trenches. Actual elevations at which facilities will be installed and cover placed over such facilities will be determined from conditions disclosed by test pits which the Contractor shall make at various locations upon request of Engineer.

As-Built Drawings: The Contractor shall provide signed as-built drawings to the University of Connecticut within 14 days following completion. As-built drawings shall reflect all field

changes that occurred during the installation. As-built drawings shall reference dimensions to known fixed points to locate facilities.

Method of Measurement:

This item will be measured by the actual number of precast concrete vaults of the size specified, complete and accepted.

Basis of Payment:

This work will be paid for at the contract unit price each for "Precast Reinforced Concrete Electric Vault (6'x14'x7' Inside)", complete in place including all necessary hardware and appurtenances. The price shall include the cost of digging test pits, transporting the materials, clearing, trenching, disposing of excavated materials, refilling trenches, furnishing additional material for trench refilling, grading, sheeting, bracing, pumping, as-built documentation, and all incidental work, except as otherwise herein provided for.

ITEM #1500176A – TEL/DATA VAULT NON-PARTICIPATING

Description:

This work shall consist of the construction of underground precast electric vaults for University telecommunications and the furnishing and installing of all appurtenances, and hardware of the type, size and kind indicated on the plans and in the specifications, or as ordered by the Engineer. In addition, work shall include clearing, trenching, disposing of unused excavated materials, tracer wire, tracer wire access box, refilling trenches, furnishing additional material for refilling, miscellaneous grading, sheeting, bracing, pumping, as-built documentation, and all incidental work.

Materials:

All materials and work shall meet the Utility Standards.

Manholes: 38Y (Splay), "J"-type, made of precast concrete with the minimum interior dimensions of 6'W X 12'L X 7' H (see drawings for details). In addition, the manhole shall comply with the following:

- End bells at conduit penetrations.
- Protective coating material: two coats of 15 mil coal tar epoxy, factory applied to manhole exterior.
- Knockouts: 72 Termaducts as depicted on the Contract Drawings
- Pulling eyebolts, inserts, joints as depicted on the Contract Drawings.
- Bonding inserts: four (4) total, ½" diameter
- Cable rack inserts: thirty-six (36) total, provided on both side walls for field installation of cable racking system, to accept ½" diameter by 1-1/2" embedment depth expansion anchor bolts.
- Access Hole: 30" opening centered on roof as depicted on the Contract Drawings.
- Drains: Cast sump into floor into which a portable sump pump can be installed. Slope floor to sump.
- Provide cast iron rings and covers; load rated H-20 with a minimum diameter of 32 inches. Covers shall be labeled "TELEPHONE"

Tracer Wire: Minimum - #12AWG solid copper conductor insulation type UL listed THWN (Gas & Oil Resistant).

Tracer Wire Access Box: Provide grade level access to each end of the tracer wire. ABS tubular valve box with Cast iron cover, color: Orange, accessible via standard pentagonal key. Tracer wire lug attached to underside of cover; rated for road surface applications. Install per manufacturer's instructions in close proximity to manhole cover with a maximum separation shall not exceed 500' between boxes (i.e. Copperhead Industries, LLC "Snake Pit Magnetized Tracer Box" series or equal)

Native Backfill: Native backfill shall consist of granular soil excavated on site meeting the approval of the Engineer. Materials shall be of such a nature that they will form a stable dense fill. Materials shall not contain stones larger than 6-inch, vegetation, masses of roots, individual roots more than 12-feet long or more than ½-inch in diameter, trash, clays, or plastic fines. Organic matter shall not exceed two percent (2%). Non-plastic fines (silts) shall not exceed 20 percent (20%).

Shop drawings, test reports and a certificate of compliance for all materials shall be furnished for approval by the Engineer prior to manufacture.

Construction Methods:

Quality Assurance: Contractor shall use adequate numbers of skilled work-persons who are thoroughly trained and experienced in the necessary crafts and who are completely familiar with the specified requirements and the methods needed for proper performance of the Work.

Contractor shall use equipment adequate in size, capacity, and numbers to accomplish the Work in a safe and timely manner.

Suitable precautions and safeguards shall be used in operating heavy equipment so pavement adjacent to trench areas is not damaged. Any damages to adjacent sidewalk flags, curbs and roadways caused by the Contractor's method of operation are to be restored at no additional cost to the State.

Contractor will be liable for any sunken cut or trenches resulting from deficiencies in backfill compaction or base concrete/binder for a period of two years from date of completion. Sunken cuts or trenches will be re-excavated, re-compacted and re-based at no cost to the State. Re-paving shall not result in additional costs to the State. Maintenance of lawn area will be the responsibility of the Contractor until May 1 of the year following completion of the Work.

Lines and Grade: The Contractor will establish and maintain all necessary lines and grades for openings, trenches and piping, including test holes. Any deviations will be brought to the attention of the Engineer for final evaluation and approval. Failure to comply with lines and grades during installation will be at the Contractor's cost for required rework.

Protection: The Contractor shall use all means necessary to identify the location of, and protect during construction, all existing underground utilities, that are to remain. The Contractor shall adhere to all requirements of the Connecticut State, Call Before You Dig (CBYD) Regulations.

The Contractor shall use all means necessary to protect all materials before, during, and after installation and to protect all objects designated to remain.

In the event of damage, the Contractor shall immediately notify the Engineer. The Contractor shall make all repairs and replacements necessary to the approval of the Damaged Facilities Owner's Representative and at no additional cost to the Damaged Facilities Owner or Owner.

The Contractor shall barricade open holes and depressions occurring as part of the Work, and provide for protection of public safety and as otherwise required.

No on-site burning or burying of material spoil or debris is allowed.

Contractor shall maintain access for emergency vehicles to the site at all times.

Earth Excavation: The Contractor shall make all required excavations for the underground facilities.

The Contractor shall excavate to grades shown on the Drawings. Where excavation grades are not shown on the Drawings, excavate as required to accommodate the installation.

The excavation shall provide for a minimum 6" clearance from all rocks, boulders, and concrete obstructions.

All Existing Utilities shall be identified, located, protected and adequate clearances shall be maintained.

Removal of boulders, stones, rock, concrete, and masonry removed by normal methods shall be considered earth excavation.

Where depressions result from, or have resulted from, the removal of surface or subsurface obstructions, open the depression to equipment working width and remove all debris and soft material as directed by the Engineer.

The Contractor shall take any and all precautions to prevent undue damage to, or undermining of pavement adjacent to, the trench.

Any preventable damage to structures which result from Contractor's operations shall be repaired or replaced, as necessary, at Contractor's expense.

Shoring and Sheeting: Excavations shall be shored, sheeted, braced or sloped to the angle of repose where a danger of slides or cave-in exist as identified by a competent individual in accordance with OSHA, state and local regulations. Sides of trenches in unstable or soft material shall be shored, sheeted, braced, sloped or otherwise supported by means of sufficient strength to protect employees working within them. Materials used for sheeting and sheet piling, bracing, shoring and underpinning shall be sound and in good serviceable condition and shall be installed and effective to the bottom of excavation.

Existing Underground Utilities and Facilities: Contractor shall not alter or remove any portion of interfering surface, or subsurface structures until approval is obtained from the Engineer, who will obtain permission for such alterations. Contractor shall properly support and protect surface and subsurface structures. The Engineer will decide whether Contractor shall eliminate interfering structures.

Upon approval by the Engineer, the Contractor shall be responsible for relocating existing underground facilities within his excavation and proceed with his Work in such a manner as not to damage or disturb such facilities. Where an energized or deenergized conductor is to be exposed, its exact location shall be determined by careful hand excavation to prevent damage to existing conductors.

Any damages to existing underground facilities caused by the Contractor in the performance of his Work will be paid for by the Contractor.

All water, gas, or other pipes, mains, services, conduits, or fixtures which may be uncovered or interfered with, and any excavations made in connection with this specification shall be properly supported and maintained in position. Backfill shall be installed around foreign utilities in such a manner as to maintain support and prevent settlement.

Excess Water Control: Do not place, spread, or roll fill material during unfavorable weather conditions. Do not resume operations until moisture content and fill density are satisfactory to the Engineer.

Provide adequate means to prevent flooding of sub-grade excavations. Promptly remove all water collecting in depressions.

Where soil has been softened or eroded by flooding or placement during unfavorable weather, remove all damaged areas and re-compact as specified for fill and compaction below.

Contractor shall provide necessary personnel and pumping equipment to properly dewater all excavated trenches, openings and existing structures and shall keep them free of water during such time as Work is being performed by the Contractor. Contractor shall keep all gutters and drains clear and open to prevent flooding of adjacent property. No separate payments will be made, unless agreed on prior to commencement of Work, for providing and maintaining temporary drainage, removing frozen earth or for any Work required resulting from rain, snow, freezing temperatures or other conditions caused by weather.

Fill, Backfill, And Compaction: Backfilling shall commence only when directed by the Engineer.

When state or local regulations do not permit the use of the excavated material for backfill or when the excavated material is deemed unsuitable for backfill by the Engineer, additional approved material required to complete the backfill will be supplied by the Contractor.

Imported fill shall be well-graded sand or gravel with a high mineral content in order to facilitate dissipation of heat which can build up in heavily loaded cables.

The Contractor shall not use any kind of acid-producing material as backfill in a conduit trench under any circumstances.

All backfill shall be placed in lifts no greater than 6” in depth and be thoroughly compacted with a mechanical vibrating compactor so as to prevent settlement of pavement after completion.

The backfill material shall be compacted by mechanical means to a density of at least 95% of the maximum density obtained in the standard compaction test (ASTM D1557).

Water or aerate the fill material as necessary, and thoroughly mix to obtain a moisture content which will permit proper compaction.

Frozen Material shall not be placed in fills nor shall the fill be placed on frozen material. If during construction of a fill, the top layer becomes frozen, the frozen material shall be removed before a succeeding layer of material is placed. Frozen excavated material which will be suitable when dry shall be allowed to thaw and to dry before being placed.

Precast – General: Precast manholes and vaults shall be installed by the Contractor in a hole which has been previously excavated and prepared.

Location shall be as indicated on the drawings and shall be changed only by the Engineer to eliminate conflicts with other utilities.

Excavation for precast items shall not exceed 1’-6” outside neat lines of concrete unless authorized by the Engineer and excavation is to be to a depth sufficient to provide 6" maximum neck on manhole

A 6" base of crushed stone to properly prepare the base of the hole shall be provided

Standard ground wire will be placed with sufficient length under manhole before placement on prepared base. Six foot (72") ends are to be brought into both ends of manhole. Ground wire shall be one continuous piece.

The Contractor shall back fill the excavation and set manhole cover casting, vault grating, or other hardware after the Engineer has acknowledged acceptance of the installed precast manhole or vault by the supplier.

The backfill shall be accepted material and shall be compacted by mechanical means of methods approved by Engineer to prevent settlement of pavement after completion.

Manhole Installation: The Contractor shall coordinate the delivery and installation of the pre-cast concrete manholes in the pits. It will be the responsibility of the Contractor to supervise the placement of the pre-cast items for proper elevation and orientation. The bottom of the excavation shall be level and adequately tamped to prevent settlement.

The Contractor shall install the manhole cover and cover extension as required. The Contractor shall furnish the material for the cover extension. All extension must be adequate for AASHTO HS20 Loading.

The Contractor shall comply with provisions of the drawings for grounding. Grounds must be brought through the manhole window at opposite ends, allowing for minimum 6' tail inside the manhole.

Cleaning and Pointing of Precast Items: The Contractor shall point up all conduits entering precast items to ensure a smooth, clean face recessed 3 inches from the interior walls of the item.

The Contractor shall leave the interior of all precast items free from excess concrete, lumber, or other debris.

Roadways, Curbs, Walks and Adjacent Properties

- The Contractor will repave and resurface, in accordance with state or local regulations, (i.e. CDOT 816), all bituminous and/or concrete streets, alleys, and driveways disturbed by the Work performed under this contract, including that pavement replacement required by state or local regulations for cutbacks around excavations.

- Replacing pavements up to a cutback of 1'-6" on all sides of the authorized excavation will be included in the installed cost for underground facilities.

- Pavement replacement beyond the one-foot cutback must be authorized by the Engineer.

- Curbing disturbed or removed in the process of installing the underground facilities shall be repaired or replaced to original condition.

- Any unnecessary damage to roadways, sidewalks, curbs, or adjacent property, as determined by the Engineer to have been caused by the Contractor's carelessness or to serve his convenience, will be repaired by the Contractor at his expense.

Grass, sod and shrubbery shall be restored or replaced. Where Work requires, the Contractor shall remove and restore or replace shrubs, sod, topsoil, terraces, trees (root systems or branches shall not be disturbed or removed unless approved by the agency having jurisdiction), etc., and any other landscaping that may be disturbed due to installation of the facilities as directed by the Engineer. Work site shall be restored to its original condition satisfactory to the Engineer. When established lawns are disturbed, sod shall be removed carefully and set aside for reuse whenever possible. Contractor shall also maintain, replace and restore grounds in a condition satisfactory to authorities and person(s) having jurisdiction until May 1 of the year following completion of the Work.

Drawings: All subsurface drawings furnished are supplied to provide only general information regarding existing subsurface conditions. Elevations and covers over facilities shown thereon have been obtained from records. Actual conditions may vary from those shown. Drawings typically do not show all existing facilities such as general services, laterals, etc., crossing or parallel with proposed trenches. Actual elevations at which facilities will be installed and cover placed over such facilities will be determined from conditions disclosed by test pits which the Contractor shall make at various locations upon request of Engineer.

Provide as-built Autodesk AutoCAD drawings to the University of Connecticut that accurately provide the following information:

- GIS coordinates of each Manhole Cover
- Manhole wall elevation drawings showing conduit identifiers and locations

Method of Measurement:

This item will be measured by the actual number of precast concrete vaults of the size specified, complete and accepted.

Basis of Payment:

This work will be paid for at the contract unit price each for "Precast Reinforced Concrete Telecom Vault (6'x12'x7' Inside)", complete in place including all necessary hardware and appurtenances. The price shall include the cost of digging test pits, transporting the materials, clearing, trenching, disposing of excavated materials, tracer wire, tracer wire access box, refilling trenches, furnishing additional material for trench refilling, grading, sheeting, bracing, pumping, as-built documentation, and all incidental work, except as otherwise herein provided for.

HARBOR BROOK

BUTLER STREET AND HANOVER STREET, MERIDEN CT

BRIDGE REPLACEMENTS AND UTILITY IMPROVEMENTS

CONTRACT DRAWINGS

FEBRUARY 27, 2024

PREPARED FOR

CITY OF MERIDEN, CT
142 EAST MAIN ST.
MERIDEN, CT 06450

PREPARED BY

FUSS & O'NEILL
146 HARTFORD ROAD
MANCHESTER, CONNECTICUT 06040
860.646.2469
www.fando.com

STATE OF CONNECTICUT
DEAN E. AUDET
No. 17623
LICENSED
PROFESSIONAL ENGINEER

SHEET INDEX

SHEET No.	SHEET TITLE
GI-001	COVER SHEET
GI-002, 003	GENERAL NOTES AND LEGEND
VB-01, 02	PROPERTY BOUNDARY SURVEY
VT-01, 02	TOPOGRAPHIC SURVEY
EX-101, 102	EXISTING CONDITIONS PLAN
HM-101	AREAS OF ENVIRONMENTAL CONCERN
HM-102	CONTROLLED MATERIALS HANDLING PLAN
CE-101	EROSION & SEDIMENTATION CONTROL PLAN
CP-100	DEMOLITION INDEX PLAN
CP-101	DEMOLITION PLAN
CP-401	BUTLER STREET NORTH ENLARGEMENT PLAN
CP-402	BUTLER STREET SOUTH ENLARGEMENT PLAN
CP-403	HANOVER BRIDGE ENGLARGEMENT PLAN
CS-101	SITE LAYOUT PLAN
CG-101	GRADING & DRAINAGE LAYOUT PLAN
CU-101	UTILITY PLAN - SANITARY SEWER
CU-111	UTILITY PLAN - WATER
CU-121	UTILITY PLAN - GAS, ELECTRICAL & COMMUNICATION
CU-201	UTILITY PLAN - SANITARY SEWER PROFILES
CU-211	UTILITY PLAN - WATER PROFILES
MPT-100	MAINTENANCE AND PROTECTION OF TRAFFIC- INDEX PLAN
MPT-101	MAINTENANCE AND PROTECTION OF TRAFFIC- SITE PLAN
MPT-102	MAINTENANCE AND PROTECTION OF TRAFFIC- BUTLER CLOSURE
MPT-103	MAINTENANCE AND PROTECTION OF TRAFFIC- HANOVER CLOSURE
SA-101	STRUCTURE LOCATION PLAN
SA-102 - 116	BORING LOGS
SA-201	BUTLER STREET BRIDGE - GENERAL PLAN & ELEVATIONS
SA-202	BUTLER STREET BRIDGE - LAYOUT PLAN
SA-203, 204	BUTLER STREET BRIDGE - ABUTMENT PLANS
SA-205	BUTLER STREET BRIDGE - FRAMING PLAN
SA-206	BUTLER STREET BRIDGE - BEAM DETAILS
SA-207	BUTLER STREET BRIDGE - DECK PLANS & DETAILS
SA-208	ELASTOMERIC BEARING PADS
SA-209 - 212	BUTLER STREET BRIDGE - BARRIER DETAILS
SA-301	HANOVER STREET BRIDGE - GENERAL PLAN & ELEVATIONS
SA-302	HANOVER STREET BRIDGE - LAYOUT PLAN
SA-303, 304	HANOVER STREET BRIDGE - ABUTMENT PLANS
SA-305	HANOVER STREET BRIDGE - FRAMING PLAN
SA-306	HANOVER STREET BRIDGE - BEAM DETAILS
SA-307	HANOVER STREET BRIDGE - DECK PLAN & DETAILS
SA-308	ELASTOMERIC BEARINGS
SA-309	UTILITY SUPPORT BEAM DETAILS
SA-310, 311	ASPHALTIC PLUG JOINT DETAILS
SA-401, 402	CHANNEL RETAINING WALLS - WALL PLAN & ELEVATION
SA-403	CHANNEL RETAINING WALLS - WALL SECTIONS
SA-404	CHANNEL RETAINING WALLS - TYPICAL WALL DETAILS
SA-501	RETAINING WALL 6
SA-502	RETAINING WALL 7
SA-503	RETAINING WALL SECTIONS
S-100	FLOODPROOFING LAYOUT PLAN
S-101	111 HANOVER STREET FLOODPROOFING
S-102	124 HANOVER STREET FLOODPROOFING
S-103	6/8 SOUTH GROVE STREET FLOODPROOFING
S-500	FLOODPROOFING DETAILS
LP-101	LANDSCAPING PLAN
CD-101 - 103	EROSION AND SEDIMENT CONTROL DETAILS
CD-104 - 106	SANITARY SEWER DETAILS
CD-107, 108	WATER DETAILS
CD-109, 111	ELECTRICAL DETAILS
CD-112	TELECOMMUNICATION DETAILS
CD-113	STORM DRAINAGE DETAILS
CD-114 - 128	GENERAL SITE DETAILS

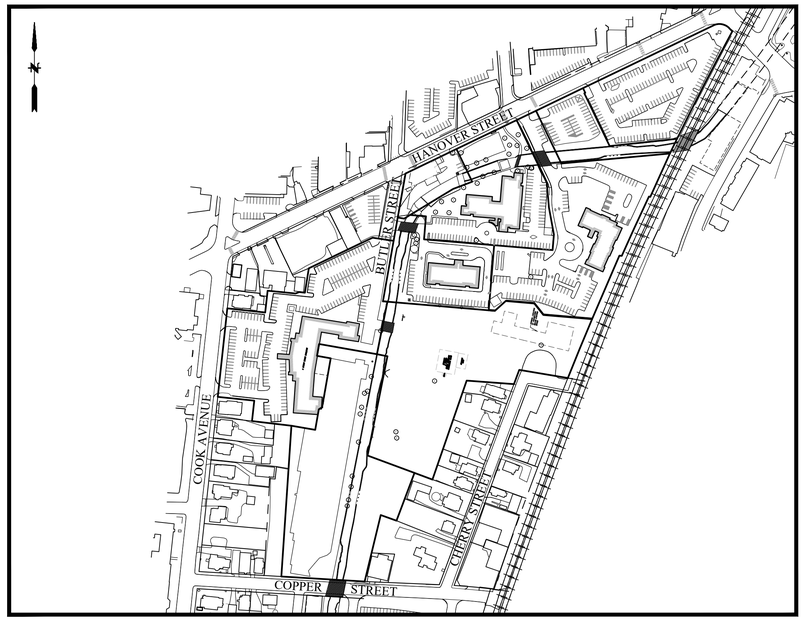

LOCATION MAP
SCALE: 1" = 200'

PROJ. No.: 20170932.C38
DATE: FEBRUARY 27, 2024

GI-001

File: J:\DWG\P2017\0932\C11\Civil\Plan\20170932C11_COV01.dwg Layout: GI-001 (PHASE 1) Plotted: 2024-02-27 4:50 PM Saved: 2024-02-27 4:01 PM User: SHuffman

CIVIL GENERAL NOTES

GENERAL

1. THE INFORMATION SHOWN ON DRAWINGS/SKETCHES SUPPLIED BY THE CITY OF MERIDEN PUBLIC WORKS DEPARTMENT ENGINEERING DIVISION REPRESENTS THE LOCATION OF UNDERGROUND UTILITIES OWNED BY THE CITY OF MERIDEN, TO THE BEST OF ITS KNOWLEDGE. THE USERS OF THESE DOCUMENTS ARE RESPONSIBLE FOR THE INTERPRETATION OF THIS INFORMATION AND SHALL DESIGN THEIR WORK ACCORDINGLY. THE ACTUAL LOCATION OF THE MUNICIPAL UTILITIES MUST BE VERIFIED BY THE CONTRACTOR. THE CITY OF MERIDEN SHALL NOT BE LIABLE FOR ANY LOSS, DAMAGES OR CLAIMS THAT ARISE FROM THE USE OF THESE DRAWINGS/SKETCHES.

2. THE CONTRACTOR MUST CONTACT "CALL BEFORE YOU DIG", 1–800–922–4455 FOR LOCATION AND MARKING OF ALL EXISTING UTILITIES PRIOR TO ANY EXCAVATION. PERMITS WILL NOT BE ISSUED UNTIL THE CONTRACTOR HAS A VALID "CALL BEFORE YOU DIG"NUMBER.

3. ALL PROPERTY OWNERS AFFECTED BY THE WORK MUST BE NOTIFIED A MINIMUM OF 48 HOURS PRIOR TO THE BEGINNING OF CONSTRUCTION.

4. PERMITTEE MUST CONTACT THE DEPARTMENT OF PUBLIC WORKS CONSTRUCTION INSPECTION AT (203) 537–3202 OR (203) 630–4019 A MINIMUM OF 24 HOURS PRIOR TO BEGINNING CONSTRUCTION. FAILURE TO DO SO MAY RESULT IN SHUT DOWN OF ACTIVITIES. PUBLIC WORKS CONSTRUCTION INSPECTION MUST INSPECT AND APPROVE ALL PERMITTED WORK. WORK WILL NOT BE ACCEPTED NOR WILL ANY BONDS BE RELEASED WITHOUT INSPECTION AND APPROVAL.

5. CONTRACTOR IS RESPONSIBLE TO PROTECT THE CITY'S INFRASTRUCTURE. CLAIMS OF DAMAGE REMAIN WITH CONTRACTOR FOR REPAIR.

6. ANY EXCAVATION WITHIN THE DRIP LINE OF TREES WITHIN THE CITY'S RIGHT OF WAY MUST RECEIVE CITY TREE WARDEN APPROVAL PRIOR TO BEGINNING WORK. CONTACT THE CITY PARKS DEPARTMENT –460 LIBERTY STREET, TELEPHONE NUMBER (203) 630–4259. NO TREES SHALL BE REMOVED WITHIN CITY ROW WITHOUT PERMISSION OF THE CITY TREE WARDEN. TREE APPLICATIONS MUST BE FILED WITH THE CITY PARKS DEPARTMENT. 21 DAYS' ADVANCE NOTICE REQUIRED

7. ALL WORK MUST CONFORM TO THE CITY STANDARD SPECIFICATIONS AND DETAILS. CONNDOT FORM 818 SPECIFICATIONS AND DETAILS ARE TO BE USED IF CITY DETAILS AND SPECIFICATIONS ARE NOT AVAILABLE. THIS INCLUDES, BUT IS NOT LIMITED TO: TRENCH BACKFILL MATERIALS; PAVEMENT REPAIR; CURB REPLACEMENTS; AND CITY SIDEWALKS.

8. CONTRACTOR IS RESPONSIBLE FOR MAINTAINING TRENCHES PENDING PERMANENT PAVEMENT REPAIR. FAILURE TO DO SO MAY RESULT IN FORFEITURE OF RIGHT–OF–WAY LICENSE FEE.

9. PAVEMENT REPAIR IS CONSIDERED TEMPORARY UNTIL A PERMANENT PATCH IS INSTALLED PER ENGINEERING STANDARD DETAILS. ONE WINTER IS REQUIRED BEFORE THE PERMANENT PATCH CAN BE INSTALLED. PERMANENT PATCH MUST BE IN PLACE FOR AT LEAST ONE YEAR PRIOR TO BOND RELEASE.

10. SIDEWALK REPAIR AND REPLACEMENT MUST BE IN PLACE FOR ONE YEAR PRIOR TO BOND RELEASE.

11. SIDEWALK CONTRACTORS MUST BE APPROVED BY THE CITY PRIOR TO PLACING SIDEWALK WITHIN RIGHT OF WAY. SAMPLES OF PAST WORK ARE REQUIRED.

12. FINAL ASPHALT REPAIR AND/OR REPLACEMENT MUST BE COORDINATED AND APPROVED BY THE ENGINEER.

13. PRIOR TO PLACEMENT OF CONCRETE, PERMITTEE MUST CONTACT PUBLIC WORKS CONSTRUCTION INSPECTION AT (203) 537–3202 OR (203) 630–4019 FOR FORM INSPECTION.

14. EROSION AND SEDIMENT CONTROLS MUST COMPLY WITH THE LATEST SEDIMENT AND EROSION CONTROL MANUAL PUBLISHED BY THE CONNECTICUT DEPARTMENT OF ENERGY AND ENVIRONMENTAL PROTECTION.

15. BASE PLAN:
    - 15.1. THE PROPERTY LINES SHOWN WERE DETERMINED BY A FIELD SURVEY CONDUCTED BY FUSS & O'NEILL, AND FROM PLANS OF RECORD, TITLED PROPERTY BOUNDARY SURVEY, DATED MARCH 20, 2020.
    - 15.2. THE TOPOGRAPHY AND PHYSICAL FEATURES ARE BASED ON FIELD SURVEYS PERFORMED BY FUSS & O'NEILL, INC. DURING JUNE 2020 AND MARTINEZ COUCH & ASSOCIATES, LLC DURING JULY 2021, AND AERIAL SERVICES PERFORMED BY GOLDEN AERIAL SURVEYS, INC DURING DECEMBER 24, 2019. THE PLAN IS TITLED TOPOGRAPHIC SURVEY AND IS DATED MARCH 20, 2020.
    - 15.3. RECORD PLANS PROVIDED BY THE CITY OF MERIDEN, AND RECORD PLANS PROVIDED BY THE UTILITY COMPANIES.

16. TOPOGRAPHIC ELEVATIONS ARE BASED ON NAVD 88 DATUM.

17. GEOTECHNICAL DATA INCLUDING TEST PIT AND BORING LOCATIONS AND ELEVATIONS WERE OBTAINED BY FUSS & O'NEILL OF MANCHESTER, CT ON JUNE 12, 2022. SUPPLEMENTAL INFORMATION WAS PROVIDED BY RMA GEOENVIRONMENTAL OF WICKFORD, RI ON MARCH 25, 2022.

18. WETLANDS WERE DELINEATED BY FUSS & O'NEILL, INC. ON MARCH 26, 2020.

19. TOTAL NUMBER OF PARKING SPACES TO BE MAINTAINED AT ALL TIMES DURING CONSTRUCTION. REFER TO 0971001A – MAINTENANCE AND PROTECTION OF TRAFFIC.

20. MAINTAIN VEHICULAR AND PEDESTRIAN ACCESS TO 76 BUTLER, 80 HANOVER, AND 60 HANOVER AT ALL TIMES.

21. ACCESS VIA EITHER THE BUTLER STREET BRIDGE OR HANOVER STREET BRIDGE TO BE MAINTAINED AT ALL TIMES.

22. CONSTRUCTION OF HANOVER STREET BRIDGE TO BE COMPLETED & VEHICULAR ACCESS RESTORED PRIOR TO STARTING WORK AT BUTLER STREET BRIDGE.

23. GEOTEXTILE FENCE SHALL BE INSTALLED AT THE LIMITS OF CLEARING TO PREVENT ANY TURTLES FROM ENTERING THE CONSTRUCTION AREA. ONCE THE GEOTEXTILE FENCE IS INSTALLED, TURTLE SWEEPS SHALL BE CONDUCTED TO ENSURE THAT NO TURTLES ARE WITHIN THE CONSTRUCTION AREA. ANY TURTLES FOUND DURING THE TURTLE SWEEP SHALL BE RELOCATED OUTSIDE OF THE CONSTRUCTION AREA, IN A SAFE LOCATION AT THE SHORTEST DISTANCE POSSIBLE FROM WHERE THEY WERE FOUND.

24. GEOTEXTILE FENCE SHALL BE INSTALLED AND MAINTAINED DURING THE ACTIVE SEASON (APRIL 1 THROUGH NOVEMBER 1), AND ALLOW FOR TWO WEEKS OF TURTLE SWEEPS PRIOR TO THE START OF CONSTRUCTION. WHEN POSSIBLE, INSTALLATION OF EROSION AND SEDIMENTATION CONTROLS SHOULD BE AVOIDED FROM LATE AUGUST THROUGH SEPTEMBER AND MARCH THROUGH MID–MAY, WHEN TURTLES ARE MOST ACTIVE. IF GEOTEXTILE FENCE MUST BE INSTALLED DURING THOSE PERIODS, A STAGGERED LAYOUT IS ENCOURAGED. ADDITIONAL GUIDANCE MAY BE PROVIDED UPON REQUEST.

25. THE USE OF EROSION CONTROL PRODUCTS WITH NETTING (INCLUDING THE BIODEGRADABLE TYPE) EMBEDDED IS PROHIBITED. IN ADDITION, ALL EROSION AND SEDIMENTATION CONTROL MEASURES SHOULD BE REMOVED AS SOON AS SOILS ARE STABLE.

26. CONTRACTOR IS RESPONSIBLE FOR SUBMITTING AS–BUILTS ON ALL WORK, INCLUDING TIES TO ALL NEW OR MODIFIED UTILITIES. BONDS WILL NOT BE RELEASED UNTIL AS–BUILT INFORMATION IS SUBMITTED AND APPROVED BY ENGINEER. REFER TO "CITY OF MERIDEN AS–BUILT REQUIREMENTS" DOCUMENT.

27. ALL SURVEY MONUMENTS TO BE LEFT UNDISTURBED. IF DISTURBANCE IS NECESSARY, CITY OF MERIDEN ENGINEERING SURVEY PARTY TO BE CONTACTED PRIOR TO WORK. RESETTING OF SURVEY MONUMENTS MUST BE PERFORMED BY CT LICENSED SURVEYOR AND BE CONSIDERED PART OF THE CONTRACTOR'S WORK.

28. CONTRACTOR MAY NOT BEGIN WORK UNTIL EXISTING MONUMENTATION IS DOCUMENTED BY CITY OF MERIDEN ENGINEERING SURVEY PARTY.

29. CONTRACTOR TO DEVELOP WATER CONTROL PLAN FOR SUBMISSION TO THE ENGINEER FOR APPROVAL PRIOR TO INITIATION OF CONSTRUCTION.

30. THE CONTRACTOR MAY ELECT TO PERFORM THE WORK USING ADDITIONAL STAGES OF WATER HANDLING THAT VARY FROM THOSE DEPICTED HEREIN. WATER CONTROL MEETING THE REQUIREMENTS OF THESE PLANS SHALL BE MAINTAINED DURING ALL STAGES OF CONSTRUCTION.

31. THE CONTRACTOR SHALL BE RESPONSIBLE FOR MAINTAINING AND PROVIDING FULLY ADEQUATE PASSAGE OF BASE STREAM FLOWS AT ALL TIMES DURING CONSTRUCTION, AND SHALL IMPLEMENT PROVISIONS, AS REQUIRED, TO PROVIDE FULLY ADEQUATE PASSAGE OF THE TEMPORARY DESIGN STORM.

32. DEWATERING, IF REQUIRED, SHALL UTILIZE BMPS AND CONFORM TO THE SPECIAL PROVISION "HANDLING CONTAMINATED GROUNDWATER," AS APPLICABLE.

WORK RESTRICTIONS

1. DO NOT CLOSE OR OBSTRUCT ROADWAYS, SIDEWALKS, FIRE HYDRANTS, AND UTILITIES WITHOUT APPROPRIATE PERMITS.

2. WORK IS RESTRICTED TO THE HOURS OF TO THE HOURS 7AM TO 6PM ON MONDAY THROUGH FRIDAY. NO WORK SHALL OCCUR OUTSIDE OF THE PROJECT WORK HOURS OR ON CITY OBSERVED HOLIDAYS WITHOUT PROPER AUTHORIZATION.

REGULATORY REQUIREMENTS

1. WITHIN LOCAL RIGHTS–OF–WAY, PERFORM THE WORK IN ACCORDANCE WITH LOCAL MUNICIPAL STANDARDS.

2. PROVIDE TRAFFIC SIGNAGE AND PAVEMENT MARKINGS IN CONFORMANCE WITH THE LATEST EDITION OF THE MANUAL OF UNIFORM TRAFFIC CONTROL DEVICES.

3. DISPOSE OF DEMOLITION DEBRIS IN ACCORDANCE WITH APPLICABLE FEDERAL, STATE AND LOCAL REGULATIONS, ORDINANCES AND STATUTES.

4. THIS PROJECT DISTURBS MORE THAN ONE ACRE OF LAND AND FALLS WITHIN THE CONNECTICUT DEEP STORMWATER AND DEWATERING WASTEWATER FROM CONSTRUCTION ACTIVITIES GENERAL PERMIT PROCESS. THE CITY OF MERIDEN WILL SUBMIT INFORMATION TO THE CT DEEP TO SATISFY THIS GENERAL PERMIT. THE CONTRACTOR MUST HAVE A COPY OF THIS GENERAL PERMIT ON SITE AT ALL TIMES AND ABIDE BY ITS REQUIREMENTS.

EROSION AND SEDIMENT CONTROL

1. INSTALL EROSION CONTROL MEASURES PRIOR TO STARTING ANY WORK ON THE SITE. REFER TO THE EROSION AND SEDIMENT CONTROL DRAWINGS.

2. IMPLEMENT ALL NECESSARY MEASURES REQUIRED TO CONTROL STORMWATER RUNOFF, DUST, SEDIMENT, AND DEBRIS FROM EXITING THE SITE. PERFORM CORRECTIVE ACTION AS NEEDED FOR EROSION CLEANUP AND REPAIRS TO OFF SITE AREAS, IF ANY, AT NO COST TO OWNER.

3. INSPECT AND MAINTAIN EROSION CONTROL MEASURES PER THE SCHEDULE IN THE EROSION AND SEDIMENT CONTROL DRAWINGS. DISPOSE OF SEDIMENT IN AN UPLAND AREA. DO NOT ENCUMBER OTHER DRAINAGE STRUCTURES AND PROTECTED AREAS.

4. PERFORM CONSTRUCTION SEQUENCING IN SUCH A MANNER TO CONTROL EROSION AND TO MINIMIZE THE TIME THAT EARTH MATERIALS ARE EXPOSED BEFORE THEY ARE COVERED, SEEDED, OR OTHERWISE STABILIZED.

5. UPON COMPLETION OF CONSTRUCTION AND ESTABLISHMENT OF PERMANENT GROUND COVER, REMOVE AND DISPOSE OF TEMPORARY EROSION CONTROL MEASURES. CLEAN SEDIMENT AND DEBRIS FROM TEMPORARY MEASURES AND FROM PERMANENT STORM DRAIN AND SANITARY SEWER SYSTEMS.

6. CONSTRUCT ALL EROSION AND SEDIMENT CONTROL MEASURES IN ACCORDANCE WITH THE STANDARDS AND SPECIFICATIONS OF THE MOST RECENT EDITION OF THE "CONNECTICUT GUIDELINES FOR SOIL EROSION AND SEDIMENT CONTROL." ALL MEASURES SHALL BE MAINTAINED AND UPGRADED TO ACHIEVE PROPER SEDIMENT CONTROL DURING CONSTRUCTION.

7. THIS IMPLEMENTATION INCLUDES THE INSTALLATION AND MAINTENANCE OF CONTROL MEASURES UNTIL PERMANENT STABILIZATION IS ACHIEVED, INFORMING ALL SUBCONTRACTORS OF THE REQUIREMENTS AND OBJECTIVES OF THE PLAN, AND NOTIFYING THE PROPER MUNICIPAL AGENCY OF ANY TRANSFER OF THIS RESPONSIBILITY. THE OWNER SHALL BE RESPONSIBLE FOR CONVEYING A COPY OF THE EROSION AND SEDIMENT CONTROL PLAN TO THE NEW OWNER IF THE TITLE OF THE LAND IS TRANSFERRED PRIOR TO ACHIEVING PERMANENT STABILIZATION.

8. INSTALL THE CONSTRUCTION ENTRANCE BEFORE CONSTRUCTION TRAFFIC INTO AND OUT OF THE PROJECT AREA BEGINS. INSTALL EROSION AND SEDIMENT CONTROL MEASURES PRIOR TO STUMP REMOVAL AND CONSTRUCTION. INSTALL ADDITIONAL CONTROL MEASURES DURING THE CONSTRUCTION PERIOD, IF DEEMED NECESSARY BY THE OWNER, OWNER AGENTS OR AGENTS OF THE MUNICIPALITY.

9. CONTROL FUGITIVE DUST USING WATER SPRAYS OR CALCIUM CHLORIDE ON SOIL SURFACES, SWEEPING PAVED AREAS, TEMPORARY WINDBREAKS OR NON–ASPHALTIC SOIL TACKIFIERS.

10. INSTALL COIR FIBER ROLLS WHERE PROTECTION AND EFFECTIVENESS IS REQUIRED FOR LESS THAN 90 DAYS. OTHERWISE, INSTALL GEOTEXTILE FENCE.

11. PROTECT CATCH BASINS AS INDICATED THROUGHOUT THE CONSTRUCTION PERIOD UNTIL ALL DISTURBED AREAS ARE PERMANENTLY STABILIZED.

12. ENCIRCLE STOCKPILES OF ERODIBLE SOIL WITH GEOTEXTILE FENCE AND COIR FIBER ROLLS. THE SIDE SLOPES OF ERODIBLE STOCKPILED MATERIAL SHALL BE NO STEEPER THAN 2:1. STOCKPILES THAT ARE NOT TO BE USED WITHIN 30 DAYS SHALL BE SEEDED AND MULCHED IMMEDIATELY AFTER THEY ARE FORMED.

13. ESTABLISH A SEDIMENTATION CONTROL SYSTEM APPROXIMATELY 5 TO 10 FEET FROM THE PROPOSED TOE OF THE CUT OR FILL AREA PRIOR TO BEGINNING EARTHWORK.

14. SEDIMENT REACHING ½ THE HEIGHT OF THE EROSION CONTROL BARRIER SHALL BE REMOVED. REMOVE AND DISPOSE OF SEDIMENT IN A MANNER CONSISTENT WITH THE INTENT OF THE PLAN.

15. APPLY PERMANENT SOIL STABILIZATION MEASURES TO ALL GRADED AREAS WITHIN 7 DAYS OF ESTABLISHING FINAL GRADE. APPLY TEMPORARY SOIL STABILIZATION MEASURES IF FINAL GRADING IS TO BE DELAYED MORE THAN 14 DAYS.

16. TEMPORARILY SEED ERODIBLE SOILS THAT WILL BE EXPOSED GREATER THAN 1 BUT LESS THAN 12 MONTHS WITHIN THE FIRST 7 DAYS OF SUSPENDING GRADING OPERATIONS. APPLY LIME AT A RATE OF 90 LBS/1000 SQ. FT. APPLY 10–10–10 FERTILIZER AT A RATE OF 7 ½ LBS/1000 SQ. FT. APPLY PERENNIAL RYE GRASS AT A RATE OF 2 LBS/1000 SQ. FT. TO A DEPTH OF ½ INCH. OPTIMUM SEEDING DATES ARE MARCH 15 TO JULY 1 AND AUGUST 1 TO OCTOBER 15. MULCH FOR SEED APPLIED WITHIN THE OPTIMUM SEEDING DATES SHALL BE APPLIED EVENLY SUCH THAT IT PROVIDES 80%–95% SOIL COVERAGE. MULCH FOR SEED APPLIED OUTSIDE OF THE OPTIMUM SEEDING DATES SHALL BE APPLIED EVENLY SUCH THAT IT PROVIDES 95%–100% COVERAGE.

17. SEED PERMANENT LAWN AREAS IN ACCORDANCE WITH THE SPECIFICATIONS.

DEMOLITION

1. REMOVAL AND DISPOSAL OF EXISTING SOILS SHALL BE IN ACCORDANCE WITH THE CONTROLLED MATERIALS HANDLING PLAN AND PROJECT STANDARD PROVISIONS AND SPECIAL PROVISIONS.

CONSTRUCTION LAYOUT

1. FIELD VERIFY EXISTING PAVEMENT AND GROUND ELEVATIONS AT THE INTERFACE WITH PROPOSED PAVEMENTS AND DRAINAGE STRUCTURES BEFORE START OF CONSTRUCTION.

2. PRIOR TO ORDERING MATERIALS AND BEGINNING CONSTRUCTION, FIELD VERIFY PROPOSED UTILITY ROUTES AND IDENTIFY ANY INTERFERENCES OR OBSTRUCTIONS WITH EXISTING UTILITIES OR PUBLIC RIGHTS–OF–WAY.

3. IMMEDIATELY INFORM THE ENGINEER IN WRITING IF EXISTING UTILITY CONDITIONS CONFLICT OR DIFFER FROM THAT INDICATED AND IF THE WORK CANNOT BE COMPLETED AS INDICATED.

4. DIMENSIONS ARE FROM FACE OF CURB, FACE OF BUILDING, FACE OF WALL, AND CENTER LINE OF PAVEMENT MARKINGS, UNLESS NOTED OTHERWISE.

5. BOUNDS OR MONUMENTATION DISTURBED DURING CONSTRUCTION SHALL BE SET OR RESET BY A PROFESSIONAL LICENSED SURVEYOR.

EARTHWORK

1. CONTROLLED MATERIALS SHALL BE HANDLED IN CONFORMANCE WITH THE CONTROLLED MATERIALS HANDLING PLAN AND SPECIAL PROVISIONS.

2. REFER TO NOTICE TO CONTRACTORS, THE SPECIAL PROVISIONS, AND THE AOEC PLAN FOR MANAGEMENT AND HANDLING OF CONTROLLED MATERIALS.

3. AREAS DESIGNATED AOEC REQUIRE SPECIAL HANDLING OF EXISTING MATERIALS. SEE "NOTICE TO CONTRACTOR– ENVIRONMENTAL INVESTIGATIONS".

4. AREAS DESIGNATED LLAOEC REQUIRE SPECIAL HANDLING OF EXISTING MATERIALS. SEE "NOTICE TO CONTRACTOR– ENVIRONMENTAL INVESTIGATIONS".

5. IF CONTROLLED MATERIAL IS ENCOUNTERED OUTSIDE OF THE IDENTIFIED AOEC AREAS BY THE CONTRACTOR, IMMEDIATELY SUSPEND ALL CONSTRUCTION ACTIVITIES IN THE AREA OF THE IMPACTED SOIL AND NOTIFY THE OWNER AND/OR THE OWNER'S ENGINEER PRIOR TO PROCEEDING. DO NOT PERFORM ANY FURTHER WORK IN THE CONTROLLED MATERIAL LOCATION WITHOUT WRITTEN AUTHORIZATION.

UTILITIES

1. THE TYPE, SIZE AND LOCATION OF DEPICTED UNDERGROUND UTILITIES ARE APPROXIMATE REPRESENTATIONS OF INFORMATION OBTAINED FROM FIELD LOCATIONS OF VISIBLE FEATURES, EXISTING MAPS AND PLANS OF RECORD, UTILITY MAPPING, AND OTHER SOURCES OF INFORMATION OBTAINED BY THE ENGINEER. ASSUME NO GUARANTEE AS TO THE COMPLETENESS, SERVICEABILITY, EXISTENCE, OR ACCURACY OF UNDERGROUND FACILITIES. FIELD VERIFY THE EXACT LOCATIONS, SIZES, AND ELEVATIONS OF THE POINTS OF CONNECTIONS TO EXISTING UTILITIES.

2. PAY ALL FEES AND COSTS ASSOCIATED WITH UTILITY MODIFICATIONS AND CONNECTIONS, REGARDLESS OF THE ENTITY THAT PERFORMS THE WORK.

3. COORDINATE THE WORK AND WORK SCHEDULE WITH UTILITY COMPANIES. PROVIDE ADEQUATE NOTICE TO UTILITIES TO PREVENT DELAYS IN CONSTRUCTION.

4. ALL SANITARY SEWER LATERALS SHALL BE 6"PVC, SDR 35, ASTM D–3034 WITH A MINIMUM 2% SLOPE AND A MINIMUM THREE FEET OF COVER.

5. MAXIMUM PREFERRED SLOPE FOR SEWER LATERALS IS 8%. ALL LATERALS GREATER THAN 12% WILL REQUIRE A DROP. NO DROPS INTO MANHOLES WILL BE PERMITTED WITHOUT WPCF APPROVAL.

6. 5'RECOMMENDED MINIMUM OFFSET FROM EDGE OF MAIN TO NEW UTILITIES (10' OFFSET FROM WATER). OFFSETS LESS THAN 5'REQUIRE APPROVAL OF DEPARTMENT OF PUBLIC UTILITIES.

7. CLEANOUTS ARE TO BE LOCATED EVERY 100' AND DIRECTION CHANGES. CLEANOUTS ARE TO BE SHOWN ON PLOT PLAN. IDENTIFY CLEANOUTS ON AS–BUILT WITH TIES. CLEANOUTS IN DRIVEWAYS MUST BE ENCLOSED IN A TRAFFIC BEARING FRAME AND COVER.

8. MANHOLES ARE REQUIRED AT MAJOR JUNCTIONS TO FACILITATE MAINTENANCE, PARTICULARLY IF THE JUNCTION IS NOT EASILY ACCESSIBLE.

9. MANHOLES OVER 8 FEET DEEP REQUIRE A 5' INTERNAL DIAMETER.

10. A BACKWATER VALVE MUST BE INSTALLED IF ANY PLUMBING FIXTURES ARE BELOW THE TOP OF THE NEAREST UPSTREAM SANITARY SEWER MANHOLE.

11. BACKWATER VALVE LOCATION TO BE SHOWN ON PLANS IN ADDITION TO BEING INDICATED ON GENERAL NOTES. BACKWATER VALVE MAY BE PLACED INSIDE OR OUTSIDE HOUSE, BUT MUST BE ACCESSIBLE FOR MAINTENANCE. IDENTIFY BACKWATER VALVES ON AS–BUILT WITH TIES. BACKWATER VALVES ARE TO BE INSTALLED INSIDE THE FOUNDATION, UNLESS PRIOR APPROVAL IS GRANTED BY THE DEPARTMENT OF PUBLIC UTILITIES.

12. VISUAL INSPECTION REQUIRED FOR ALL EXISTING SANITARY LATERALS PRIOR TO PERMITTING NEW CONNECTION. VIDEO INSPECTION REQUIRED FOR LATERALS OVER 20' IN LENGTH OR MORE THAN 10 YEARS OLD, UNLESS OTHERWISE DIRECTED BY THE ENGINEER.

13. CITY OWNERSHIP AND RESPONSIBILITY IS FOR THE SANITARY MAIN ONLY. PROPERTY OWNER IS RESPONSIBLE FOR THE LATERAL FROM THE WYE TO THE BUILDING, INCLUDING THE WYE CONNECTION AND ALL CLEANOUTS.

14. ENGINEERING PERMITS REQUIRED FOR ALL SEWER WORK OUTSIDE THE FOUNDATION AND ALL WORK WITHIN THE CITY RIGHT OF WAY.

15. CONTRACTOR MUST CONTACT PUBLIC WORKS CONSTRUCTION INSPECTION AT (203) 537–3202 OR (203) 630–4019 TO INSPECT AND APPROVE WORK. WORK WILL NOT BE ACCEPTED WITHOUT INSPECTION AND APPROVAL.

16. WATER SERVICES SHALL BE A MINIMUM 1", TYPE "K"COPPER. COPPER PIPE (MINIMUM 1", TYPE K) IS REQUIRED BETWEEN THE WATER MAIN AND EITHER THE CURB BOX OR METER PIT. ONLY TYPE K COPPER AND DUCTILE IRON ARE PERMITTED FOR SERVICES. PLASTIC PIPE IS NOT PERMITTED OUTSIDE OF THE FOUNDATION.

17. REPAIRS TO WATER SERVICES ARE ALLOWED ONLY FOR COPPER OR BRASS SERVICES. IRON AND GALVANIZED PIPE SHALL BE REPLACED FROM CURB BOX TO METER. REPAIR JOINTS ARE NOT ALLOWED UNDER SIDEWALKS.

18. NEW WATER SERVICES SHALL HAVE A MINIMUM TEN FEET HORIZONTAL SEPARATION AND AN 18"VERTICAL SEPARATION FROM ANY SANITARY SEWER LINE. REPLACEMENT WATER SERVICES SHOULD ACHIEVE THE GREATEST SEPARATION PRACTICAL.

19. 5'RECOMMENDED MINIMUM OFFSET FROM EDGE OF WATER MAIN TO NEW UTILITIES. OFFSETS LESS THAN 5'REQUIRE APPROVAL OF DEPARTMENT OF PUBLIC UTILITIES.

20. SINGLE FAMILY RESIDENTIAL METERS ARE 5/8"UNLESS OTHERWISE REQUIRED. METER PITS ARE REQUIRED AS DETERMINED BY THE PUC OR WHEN SERVICE LENGTH EXCEEDS 100 FEET. THE "CITY OF MERIDEN CONCEPTUAL APPROVAL FORM"MUST BE COMPLETED AND RETURNED TO THE ENGINEERING DEPARTMENT FOR METER SIZING PRIOR TO APPROVAL.

21. METER PITS SHALL NOT BE PLACED IN DRIVEWAYS OR ANY TRAFFIC LOAD BEARING SURFACES. A MINIMUM 5' OFFSET FROM SUCH SURFACES IS REQUIRED. 2'OFFSET IS PERMITTED WITH CURBING. METER PITS ARE TO BE INSTALLED PER CITY SPECIFICATIONS AND DETAILS. METER PITS ARE PROPERTY OWNER RESPONSIBILITY AND DAMAGE TO METERS RESULTING FROM METER PIT DAMAGE IS PROPERTY OWNER RESPONSIBILITY.

22. CITY OWNERSHIP AND RESPONSIBILITY IS FROM THE WATER MAIN TO, AND INCLUDING, THE CURB BOX, ALONG WITH THE PHYSICAL WATER METER. PROPERTY OWNER IS RESPONSIBLE FOR THE LATERAL FROM THE CURB BOX TO WATER METER AND ALL WATER METER PITS AND CONNECTIONS.

23. ENGINEERING PERMITS REQUIRED FOR ALL WATER WORK OUTSIDE THE FOUNDATION AND ALL WORK WITHIN THE CITY RIGHT OF WAY.

24. CONTRACTOR TO NOTIFY PUBLIC WORKS UTILITIES INSPECTOR WHEN WORK IS COMPLETE.

25. RIM ELEVATIONS FOR MANHOLES, VALVE COVERS, GATE AND PULL BOXES, AND OTHER STRUCTURES ARE APPROXIMATE. SET OR RESET RIM ELEVATIONS AS FOLLOWS:

    IN PAVEMENTS AND CONCRETE SURFACES: FLUSH
    IN SURFACES ALONG ACCESSIBLE ROUTES: FLUSH
    IN LANDSCAPE, SEEDED, AND OTHER EARTH SURFACE AREAS: 1–INCH ABOVE SURROUNDING AREA; TAPER EARTH TO RIM ELEVATION.

26. INSTALL PROPOSED PRIVATE UTILITY SERVICES ACCORDING TO THE REQUIREMENTS PROVIDED BY, AND APPROVED BY THE AUTHORITY HAVING JURISDICTION (WATER, SEWER, GAS, TELEPHONE, ELECTRIC, FIRE ALARM, ETC.). COORDINATE FINAL DESIGN LOADS AND LOCATIONS WITH OWNER AND ENGINEER.

27. COORDINATED REMOVAL OR ABANDONMENT OF UTILITIES WITH THE RESPECTIVE UTILITY COMPANIES.

28. ALL EXISTING UTILITY STRUCTURES THAT ARE TO REMAIN ARE TO BE RESET AT FINAL GRADES. SEE GRADING LAYOUT PLAN.

29. THE UNDERGROUND UTILITIES DEPICTED HEREON ARE COMPILED BASED ON A GEOPHYSICAL INVESTIGATION USING GROUND PENETRATING RADAR (GPR) PERFORMED BY CORBUILT, LLC AND FIELD LOCATION OF VISIBLE FEATURES IN MARCH OF 2020, AS WELL AS MAPS AND PLANS OF RECORD, UTILITY MAPPING OR OTHER SOURCES OF INFORMATION.

No.	DATE	DESCRIPTION	DESIGNER	REVIEWER

STATE OF CONNECTICUT · DEAN E. AUDET · No. 17623 · LICENSED PROFESSIONAL ENGINEER

SEAL

SCALE:
HORZ.:
VERT.:
DATUM:
HORZ.:
VERT.:
0
GRAPHIC SCALE

FUSS & O'NEILL
146 HARTFORD ROAD
MANCHESTER, CONNECTICUT 06040
860.646.2469
www.fando.com

CITY OF MERIDEN

GENERAL NOTES AND LEGEND

BRIDGE REPLACEMENTS AND UTILITY IMPROVEMENTS
BUTLER STREET AND HANOVER STREET

MERIDEN CONNECTICUT

PROJ. No.: 20170932.C38
DATE: FEBRUARY 27, 2024

GI-002

File: J:\DWG\P2017\0932\C11\CivilPlan\20170932C11_COV01.dwg Layout: GI-002 (PHASE 1) Plotted: 2024-02-27 4:50 PM Saved: 2024-02-27 4:01 PM User: SHuffman
PC3: AUTOCAD PDF (GENERAL DOCUMENTATION).PC3 STB/CTB: FO.STB
LAYER STATE:
MS VIEW:

CIVIL GENERAL NOTES

UTILITIES– CONTINUED

30. THE SURVEYOR MAKES NO GUARANTEE THAT THE UNDERGROUND UTILITIES SHOWN COMPRISE ALL SUCH UTILITIES IN THE AREA, EITHER IN SERVICE OR ABANDONED. THE SURVEYOR FURTHER DOES NOT WARRANT THAT THE UNDERGROUND UTILITIES SHOWN ARE IN THE EXACT LOCATION INDICATED ALTHOUGH HE DOES DECLARE THAT THEY ARE DEPICTED AS ACCURATELY AS POSSIBLE FROM INFORMATION AVAILABLE. THE SURVEYOR HAS NOT PHYSICALLY LOCATED THE UNDERGROUND UTILITIES

31. THE FOLLOWING MINIMUM HORIZONTAL & VERTICAL CLEARANCES BETWEEN UTILITIES SHALL BE MAINTAINED:

GAS–UTILITY SEPARATIONS		
UTILITY	VERTICAL	HORIZONTAL
SANITARY SEWER MAIN	12"	84"
SANITARY SEWER LATERAL	12"	60"
WATER MAIN	12"	60"
WATER SERVICE	12"	60"
STORM SEWER	12"	48"

TRAFFIC

1. UNIFORMED CITY OF MERIDEN POLICE OFFICER(S) TO PROVIDE TRAFFIC CONTROL WHEN REQUIRED. POLICE SCHEDULING CAN BE REACHED AT 203–630–6305.

2. CONTRACTOR MUST RESTORE PAVEMENT MARKINGS DISTURBED BY THE CONSTRUCTION IMMEDIATELY UPON COMPLETION OF THE WORK IN MATERIALS SUITABLE TO DPW –TRAFFIC DIVISION. TEMPORARY TAPE, IF USED, MUST BE MAINTAINED IN GOOD CONDITION UNTIL THE PERMANENT MARKINGS ARE PLACED.

3. ALL TEMPORARY TRAFFIC CONTROL DEVICES MUST CONFORM TO THE STANDARDS OF THE MANUAL ON UNIFORM TRAFFIC CONTROL DEVICES (M.U.T.C.D.) AND THE CITY OF MERIDEN. A MAINTENANCE OF TRAFFIC PLAN (MOT) WILL BE REQUIRED FOR LANE CLOSURES THAT WILL LAST FOR MORE THAN 1 DAY.

SITE RESTORATION

1. PROVIDE 6–INCHES OF TOPSOIL AND SEED TO AREAS DISTURBED DURING CONSTRUCTION AND NOT DESIGNATED TO BE RESTORED WITH IMPERVIOUS SURFACES (BUILDINGS, PAVEMENTS, WALKS, ETC.) UNLESS OTHERWISE NOTED.

2. EXISTING CURBING, SIDEWALKS, PAVEMENT AND RELATED INFRASTRUCTURE SHALL BE REPAIRED, IN–KIND, AT NO COST TO THE CITY SHOULD THESE BE DAMAGED DURING CONSTRUCTION.

LEGEND

- PROPERTY LINE
- EXISTING CONTOURS (200)
- EXISTING SPOT ELEVATION (x 201.0)
- EXISTING TREE LINE
- EXISTING DECIDUOUS TREE
- EXISTING EVERGREEN TREE
- EXISTING SHRUB
- EXISTING UTILITY POLE
- EXISTING GUY WIRE
- EXISTING GAS GATE (GG)
- EXISTING SWITCHGEAR (SW)
- EXISTING TRANSFORMER (TX)
- EXISTING LIGHT
- EXISTING TEL/DATA VAULT
- EXISTING HYDRANT
- EXISTING WATER GATE VALVE (WG)
- EXISTING SANITARY MANHOLE
- EXISTING STORM MANHOLE
- EXISTING FLAT TOP CATCH BASIN
- EXISTING CATCH BASIN
- EXISTING REINFORCED CONCRETE CULVERT END
- EXISTING STORM LINE
- EXISTING SANITARY SEWER LINE
- EXISTING OVERHEAD WIRES (U)
- EXISTING TELEPHONE LINE (T)
- EXISTING WATER MAIN (W)
- EXISTING GAS MAIN (G)
- EXISTING ELECTRICAL SERVICE (E)
- EXISTING RAILROAD TRACK
- EXISTING BOLLARD / POST
- EXISTING PEDESTRIAN WALK SIGNAL
- EXISTING SIGN
- EXISTING EDGE OF WATER
- EXISTING FEMA 100–YEAR FLOODPLAIN BOUNDARY (FEMA100FLP)
- EXISTING CURB
- EXISTING CHAIN LINK FENCE
- EXISTING GUIDE RAIL
- EXISTING IRON PIPE/ROD
- EXISTING MONUMENT
- EXISTING MONITORING WELL
- TEST PIT LOCATION AND IDENTIFICATION (TP-01)
- SOIL BORING LOCATION AND IDENTIFICATION (SB-06)
- CONCRETE CHIP SAMPLING AND SOIL BORING LOCATION (SB-06)
- MONITORING WELL LOCATION AND IDENTIFICATION (MW-100)
- GEOTECHNICAL TEST PIT AND BORING LOCATIONS (GP-1)
- SEDIMENT SAMPLING LOCATION (SD-01)
- HISTORICAL SEDIMENT SAMPLING LOCATION (PB-004)
- GEOTECHNICAL BORING LOCATIONS (GB-1)
- GEOTECHNICAL TEST PIT LOCATIONS (GTP-1)
- PROPOSED SEDIMENTATION CONTROL GEOTEXTILE FENCE SYSTEM (SF)
- PROPOSED SEDIMENTATION CONTROL COIR FIBER ROLL SYSTEM (SS)
- PROPOSED COFFERDAM
- PROPOSED ANTI–TRACKING APRON
- PROPOSED DEWATERING BAG (SS)
- PROPOSED SEDIMENTATION CONTROL SYSTEM AT PROPOSED CATCH BASIN
- PROPOSED SEDIMENTATION CONTROL SYSTEM AT EXISTING CATCH BASIN
- PROPOSED TREE PROTECTION
- DEMOLITION LIMIT OF DISTURBANCE AND HARDSCAPE REMOVAL
- PROPOSED LIMIT OF EXISTING WALL DEMOLITION
- UTILITY TO BE REMOVED & DISPOSED OF
- UTILITY TO BE ABANDONED
- AREA OF ENVIRONMENTAL CONCERN (AS NOTED)
- AREA OF ENVIRONMENTAL CONCERN (AOEC–05A, AS NOTED)
- LIMIT OF REMEDIATION AREA (SHEETS HM–101, HM–102)
- APPROXIMATE LOCATION OF EXISTING TEMPORARY FENCING AND SIGNAGE AROUND SIGNIFICANT ENVIRONMENTAL HAZARD (SEH) AREA
- AREA OF ENVIRONMENTAL CONCERN (AOEC–05, SHEET HM–102)
- AREA OF ENVIRONMENTAL CONCERN (AOEC–05A, SHEET HM–102)
- AREA OF ENVIRONMENTAL CONCERN WITHIN THE LIMIT OF THE TEMPORARY PROCESSED AGGREGATE BASE PARKING LOT

- LIMIT OF DISTURBANCE (LOD)
- PROPOSED CONTOURS (200)
- PROPOSED SPOT ELEVATION (201.0)
- PROPOSED TREELINE
- PROPOSED TREE
- PROPOSED TURF ESTABLISHMENT
- PROPOSED SHRUB
- PROPOSED SWITCHGEAR (SW)
- PROPOSED LIGHT
- PROPOSED TEL/DATA VAULT
- PROPOSED HYDRANT ASSEMBLY
- PROPOSED WATER GATE VALVE
- PROPOSED SANITARY MANHOLE
- PROPOSED STORM MANHOLE
- PROPOSED TYPE "C–L" CATCH BASIN
- PROPOSED TYPE "C" CATCH BASIN
- PROPOSED REINFORCED CONCRETE CULVERT END
- PROPOSED STORM DRAINAGE LINE
- PROPOSED SANITARY SEWER LINE
- PROPOSED SANITARY SEWER LINE (S)
- PROPOSED TELECOMMUNICATIONS LINE (T)
- PROPOSED WATER MAIN (W)
- PROPOSED GAS MAIN (G)
- PROPOSED ELECTRICAL SERVICE (E)
- PROPOSED TEST PIT LOCATION
- REMOVE AND RESET BOLLARD
- RESET PEDESTRIAN CROSSWALK WALK SIGN POST
- PROPOSED SIGN
- PROPOSED BOLLARD
- PROPOSED CONCRETE WHEEL STOP
- PROPOSED BITUMINOUS CURB
- PROPOSED CHAIN LINK FENCE
- PROPOSED METAL BEAM RAIL GUIDERAIL
- PROPOSED METAL BRIDGE RAIL
- BITUMINOUS CONCRETE SURFACE DETAIL
- BITUMINOUS CONCRETE PAVEMENT
- NON–PARTICIPATING WORK AREA
- TEMPORARY PROCESSED AGGREGATE BASE PARKING LOT
- PROPOSED INTERMEDIATE RIPRAP
- PROPOSED MODIFIED RIPRAP
- PROPOSED STAMPED CONCRETE DRIVEWAY APRON
- PROPOSED SCREENED CONCRETE DUMPSTER PAD
- PROPOSED BITUMINOUS SIDEWALK
- PROPOSED CONCRETE SIDEWALK
- PROPOSED MONOLITHIC CURB AND SIDEWALK
- PROPOSED DETECTABLE WARNING SURFACE
- PROPOSED PAINTED STOP BAR
- PROPOSED PAINTED CROSSWALK

ABBREVIATIONS

A.C.	ASBESTOS CEMENT
ALUM., AL.	ALUMINUM
APPROX.	APPROXIMATE
ARV	AIR RELEASE/ VACUUM VALVE
B–2	BORING NO.
BIT.	BITUMINOUS
℄	BASELINE
BLDG.	BUILDING
BM	BENCH MARK
C.I.	CAST IRON
CLDIP	CEMENT LINED DUCTILE IRON PIPE
℄	CENTERLINE
CONC.	CONCRETE
CONN.	CONNECTION
CB	CATCH BASIN
CO	CLEANOUT
DBL CB	DOUBLE CATCH BASIN
D.I.	DUCTILE IRON
ø, DIA.	DIAMETER
DMH	DRAINAGE MANHOLE
E.C.L.	EROSION CONTROL LINING
ECO	END CLEANOUT
EL.	ELEVATION
EOB.	END OF BORING
EXIST.	EXISTING
EXP.	EXPANSION
FRP	FIBERGLASS REINFORCED POLYETHYLENE
G.W.O	GROUNDWATER OBSERVED
HDPE	HIGH DENSITY POLYETHYLENE
I.D.	INSIDE DIAMETER
INV.	INVERT
FF	FINISH FLOOR
G.V	GATE VALVE
H.P.	HIGH POINT
L.P.	LOW POINT
LPS	LOW PRESSURE SEWER
LW	LAB WASTE
MAX.	MAXIMUM
MIN.	MINIMUM
MJ	MECHANICAL JOINT
NTS	NOT TO SCALE
O.D.	OUTSIDE DIAMETER
OS	OUTDOOR SHOWER
P–3	PROBE NO.
PROP.	PROPOSED
PVC	POLYVINYL CHLORIDE
RC	REINFORCED CONCRETE
SCS	SEDIMENTATION CONTROL SYSTEM
RCP	REINFORCED CONCRETE PIPE
RGS	RIGID GALVANIZED STEEL
SCH.	SCHEDULE
SMH	SANITARY MANHOLE
STA.	STATION
DSMH	DROP SANITARY MANHOLE
TF	TOP OF FRAME
TYP.	TYPICAL
VCP	VITRIFIED CLAY PIPE
W/	WITH

File: J:\DWG\P2017\0932\C11\Civil\Plan\20170932C11_COV01.dwg Layout: GI-003 (PHASE 1) Plotted: 2024-02-27 4:50 PM Saved: 2024-02-27 4:01 PM User: SHuffman
PC3: AUTOCAD PDF (GENERAL DOCUMENTATION).PC3 STB/CTB: FO.STB
LAYER STATE:
MS VIEW:

No.	DATE	DESCRIPTION	DESIGNER	REVIEWER

SEAL

STATE OF CONNECTICUT · DEAN E. AUDETTE · No. 17623 · LICENSED PROFESSIONAL ENGINEER

SEAL

SCALE:
HORZ.:
VERT.:
DATUM:
HORZ.:
VERT.:
0
GRAPHIC SCALE

FUSS & O'NEILL
146 HARTFORD ROAD
MANCHESTER, CONNECTICUT 06040
860.646.2469
www.fando.com

CITY OF MERIDEN

GENERAL NOTES AND LEGEND

BRIDGE REPLACEMENTS AND UTILITY IMPROVEMENTS
BUTLER STREET AND HANOVER STREET

MERIDEN CONNECTICUT

PROJ. No.: 20170932.C38
DATE: FEBRUARY 27, 2024

GI-003

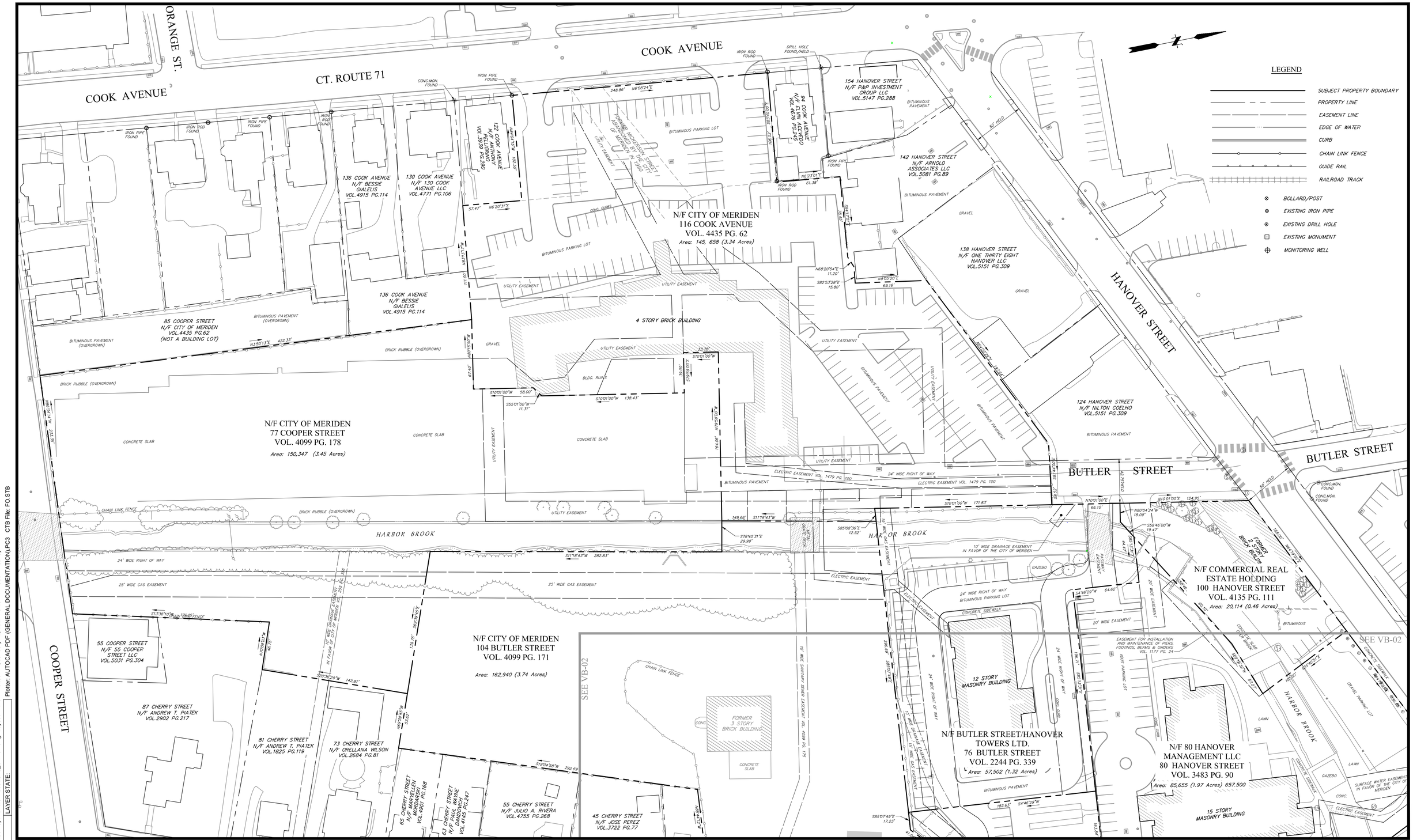

No.	DATE	DESCRIPTION	DESIGNER	REVIEWER
1.			XX/XX	XX

SEAL

SEAL

TO MY KNOWLEDGE AND BELIEF, THIS MAP IS SUBSTANTIALLY CORRECT AS NOTED HEREON. THIS MAP SHOULD NOT BE CONSIDERED ORIGINAL SIGNED AND SEALED SURVEY UNLESS IT BEARS THE EMBOSSED SEAL OR THE DIGITALLY ENCRYPTED ELECTRONIC SIGNATURE OF THE LICENSED LAND SURVEYOR BELOW.

MICHAEL L EARLEY PE LS — LICENSE # 70224

SCALE:
HORZ.: 1" = 40'
VERT.:
DATUM:
HORZ.: NAD 83
VERT.: NAVD 88
40 20 0 40
GRAPHIC SCALE

FUSS & O'NEILL
146 HARTFORD ROAD
MANCHESTER, CONNECTICUT 06040
860.646.2469
www.fando.com

CITY OF MERIDEN
PROPERTY BOUNDARY SURVEY
BRIDGE REPLACEMENTS AND UTILITY IMPROVEMENTS
BUTLER STREET AND HANOVER STREET
MERIDEN — CONNECTICUT

PROJ. No.: 20170932C10
DATE: 03/20/2020
VB-01

File Path: H:\DWG\P2017\0932\C10\Survey\Plan\20170932C10_SRV01.dwg Layout: VB-01 Plotted: Fri, January 12, 2024 - 6:20 PM User: mearley
Plotter: AUTOCAD PDF (GENERAL DOCUMENTATION).PC3 CTB File: FO.STB
MS VIEW:
LAYER STATE:

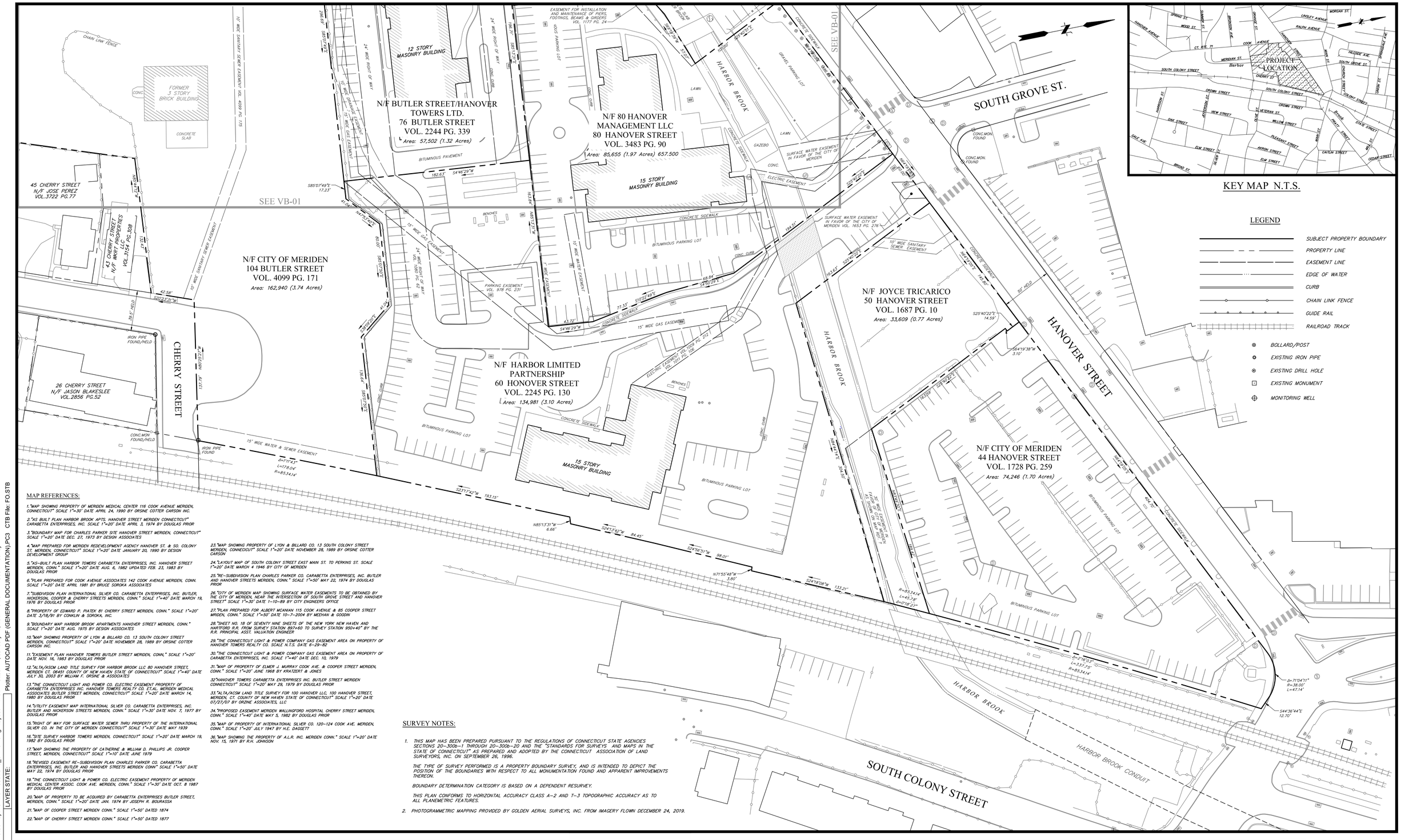

MAP REFERENCES:

1. "MAP SHOWING PROPERTY OF MERIDEN MEDICAL CENTER 116 COOK AVENUE MERIDEN, CONNECTICUT" SCALE 1"=30' DATE APRIL 24, 1990 BY ORSINE COTTER CARSON INC.
2. "AS BUILT PLAN HARBOR BROOK APTS. HANOVER STREET MERIDEN CONNECTICUT" CARABETTA ENTERPRISES, INC. SCALE 1"=20' DATE APRIL 3, 1974 BY DOUGLAS PRIOR
3. "BOUNDARY MAP FOR CHARLES PARKER SITE HANOVER STREET MERIDEN, CONNECTICUT" SCALE 1"=20' DATE DEC. 27, 1973 BY DESIGN ASSOCIATES
4. "MAP PREPARED FOR MERIDEN REDEVELOPMENT AGENCY HANOVER ST. & SO. COLONY ST. MERIDEN, CONNECTICUT" SCALE 1"=20' DATE JANUARY 20, 1990 BY DESIGN DEVELOPMENT GROUP
5. "AS-BUILT PLAN HARBOR TOWERS CARABETTA ENTERPRISES, INC. HANOVER STREET MERIDEN, CONN." SCALE 1"=20' DATE AUG. 6, 1982 UPDATED FEB. 23, 1983 BY DOUGLAS PRIOR
6. "PLAN PREPARED FOR COOK AVENUE ASSOCIATES 142 COOK AVENUE MERIDEN, CONN. SCALE 1"=20' DATE APRIL 1981 BY BRUCE SOROKA ASSOCIATES
7. "SUBDIVISION PLAN INTERNATIONAL SILVER CO. CARABETTA ENTERPRISES, INC. BUTLER, NICKERSON, COOPER & CHERRY STREETS MERIDEN, CONN." SCALE 1"=40' DATE MARCH 19, 1976 BY DOUGLAS PRIOR
8. "PROPERTY OF EDWARD P. PIATEK 81 CHERRY STREET MERIDEN, CONN." SCALE 1"=20' DATE 3/16/91 BY CONKLIN & SOROKA, INC.
9. "BOUNDARY MAP HARBOR BROOK APARTMENTS HANOVER STREET MERIDEN, CONN." SCALE 1"=20' DATE AUG. 1975 BY DESIGN ASSOCIATES
10. "MAP SHOWING PROPERTY OF LYON & BILLARD CO. 13 SOUTH COLONY STREET MERIDEN, CONNECTICUT" SCALE 1"=20' DATE NOVEMBER 28, 1989 BY ORSINE COTTER CARSON INC.
11. "EASEMENT PLAN HANOVER TOWERS BUTLER STREET MERIDEN, CONN." SCALE 1"=20' DATE NOV. 16, 1983 BY DOUGLAS PRIOR
12. "ALTA/ASCM LAND TITLE SURVEY FOR HARBOR BROOK LLC 80 HANOVER STREET, MERIDEN CT. 06450 COUNTY OF NEW HAVEN STATE OF CONNECTICUT" SCALE 1"=40' DATE JULY 30, 2003 BY WILLIAM F. ORSINE & ASSOCIATES
13. "THE CONNECTICUT LIGHT AND POWER CO. ELECTRIC EASEMENT PROPERTY OF CARABETTA ENTERPRISES INC. HANOVER TOWERS REALTY CO. ET.AL. MERIDEN MEDICAL ASSOCIATES BUTLER STREET MERIDEN, CONNECTICUT" SCALE 1"=20' DATE MARCH 14, 1980 BY DOUGLAS PRIOR
14. "UTILITY EASEMENT MAP INTERNATIONAL SILVER CO. CARABETTA ENTERPRISES, INC. BUTLER AND NICKERSON STREETS MERIDEN, CONN." SCALE 1"=30' DATE NOV. 7, 1977 BY DOUGLAS PRIOR
15. "RIGHT OF WAY FOR SURFACE WATER SEWER THRU PROPERTY OF THE INTERNATIONAL SILVER CO. IN THE CITY OF MERIDEN CONNECTICUT" SCALE 1"=30' DATE MAY 1939
16. "SITE SURVEY HARBOR TOWERS MERIDEN, CONNECTICUT" SCALE 1"=20' DATE MARCH 19, 1982 BY DOUGLAS PRIOR
17. "MAP SHOWING THE PROPERTY OF CATHERINE & WILLIAM D. PHILLIPS JR. COOPER STREET, MERIDEN, CONNECTICUT" SCALE 1"=10' DATE JUNE 1979
18. "REVISED EASEMENT RE-SUBDIVISION PLAN CHARLES PARKER CO. CARABETTA ENTERPRISES, INC. BUTLER AND HANOVER STREETS MERIDEN CONN" SCALE 1"=50' DATE MAY 22, 1974 BY DOUGLAS PRIOR
19. "THE CONNECTICUT LIGHT & POWER CO. ELECTRIC EASEMENT PROPERTY OF MERIDEN MEDICAL CENTER ASSOC. COOK AVE. MERIDEN, CONN." SCALE 1"=30' DATE OCT. 8 1987 BY DOUGLAS PRIOR
20. "MAP OF PROPERTY TO BE ACQUIRED BY CARABETTA ENTERPRISES BUTLER STREET, MERIDEN, CONN." SCALE 1"=20' DATE JAN. 1974 BY JOSEPH R. BOURASSA
21. "MAP OF COOPER STREET MERIDEN CONN." SCALE 1"=50' DATED 1874
22. "MAP OF CHERRY STREET MERIDEN CONN." SCALE 1"=50' DATED 1877
23. "MAP SHOWING PROPERTY OF LYON & BILLARD CO. 13 SOUTH COLONY STREET MERIDEN, CONNECICUT" SCALE 1"=20' DATE NOVEMBER 28, 1989 BY ORSINE COTTER CARSON
24. "LAYOUT MAP OF SOUTH COLONY STREET EAST MAIN ST. TO PERKINS ST. SCALE 1"=20' DATE MARCH 4 1946 BY CITY OF MERIDEN
25. "RE-SUBDIVISION PLAN CHARLES PARKER CO. CARABETTA ENTERPRISES, INC. BUTLER AND HANOVER STREETS MERIDEN, CONN." SCALE 1"=50' MAY 22, 1974 BY DOUGLAS PRIOR
26. "CITY OF MERIDEN MAP SHOWING SURFACE WATER EASEMENTS TO BE OBTAINED BY THE CITY OF MERIDEN, NEAR THE INTERSECTION OF SOUTH GROVE STREET AND HANOVER STREET" SCALE 1"=30' DATE 1-10-89 BY CITY ENGINEERS OFFICE
27. "PLAN PREPARED FOR ALBERT MCANAN 115 COOK AVENUE & 85 COOPER STREET MRIDEN, CONN." SCALE 1"=50' DATE 10-7-2004 BY MEEHAN & GOODIN
28. "SHEET NO. 1B OF SEVENTY NINE SHEETS OF THE NEW YORK NEW HAVEN AND HARTFORD R.R. FROM SURVEY STATION 897+60 TO SURVEY STATION 950+40" BY THE R.R. PRINCIPAL ASST. VALUATION ENGINEER
29. "THE CONNECTICUT LIGHT & POWER COMPANY GAS EASEMENT AREA ON PROPERTY OF HANOVER TOWERS REALTY CO. SCALE N.T.S. DATE 6-29-82
30. "THE CONNECTICUT LIGHT & POWER COMPANY GAS EASEMENT AREA ON PROPERTY OF CARABETTA ENTERPRISES, INC. SCALE 1"=40' DATE DEC. 10, 1979
31. "MAP OF PROPERTY OF ELMER J. MURRAY COOK AVE. & COOPER STREET MERIDEN, CONN." SCALE 1"=20' JUNE 1968 BY KRATZERT & JONES
32. "HANOVER TOWERS CARABETTA ENTERPRISES INC. BUTLER STREET MERIDEN CONNECTICUT" SCALE 1"=20' MAY 29, 1979 BY DOUGLAS PRIOR
33. "ALTA/ACSM LAND TITLE SURVEY FOR 100 HANOVER LLC, 100 HANOVER STREET, MERIDEN, CT. COUNTY OF NEW HAVEN STATE OF CONNECTICUT" SCALE 1"=20' DATE 07/27/07 BY ORZINE ASSOCIATES, LLC
34. "PROPOSED EASEMENT MERIDEN WALLINGFORD HOSPITAL CHERRY STREET MERIDEN, CONN." SCALE 1"=40' DATE MAY 5, 1982 BY DOUGLAS PRIOR
35. "MAP OF PROPERTY OF INTERNATIONAL SILVER CO. 120-124 COOK AVE. MERIDEN, CONN." SCALE 1"=20' JULY 1947 BY H.E. DAGGETT
36. "MAP SHOWING THE PROPERTY OF A.L.R. INC. MERIDEN CONN." SCALE 1"=20' DATE NOV. 15, 1971 BY R.H. JOHNSON

SURVEY NOTES:

1. THIS MAP HAS BEEN PREPARED PURSUANT TO THE REGULATIONS OF CONNECTICUT STATE AGENCIES SECTIONS 20-300b-1 THROUGH 20-300b-20 AND THE "STANDARDS FOR SURVEYS AND MAPS IN THE STATE OF CONNECTICUT" AS PREPARED AND ADOPTED BY THE CONNECTICUT ASSOCIATION OF LAND SURVEYORS, INC. ON SEPTEMBER 26, 1996.

   THE TYPE OF SURVEY PERFORMED IS A PROPERTY BOUNDARY SURVEY, AND IS INTENDED TO DEPICT THE POSITION OF THE BOUNDARIES WITH RESPECT TO ALL MONUMENTATION FOUND AND APPARENT IMPROVEMENTS THEREON.

   BOUNDARY DETERMINATION CATEGORY IS BASED ON A DEPENDENT RESURVEY.

   THIS PLAN CONFORMS TO HORIZONTAL ACCURACY CLASS A-2 AND T-3 TOPOGRAPHIC ACCURACY AS TO ALL PLANEMETRIC FEATURES.

2. PHOTOGRAMMETRIC MAPPING PROVIDED BY GOLDEN AERIAL SURVEYS, INC. FROM IMAGERY FLOWN DECEMBER 24, 2019.

No.	DATE	DESCRIPTION	DESIGNER	REVIEWER
1.			XX/XX	XX

SEAL

SEAL

TO MY KNOWLEDGE AND BELIEF, THIS MAP IS CONSIDERED SUBSTANTIALLY CORRECT AS NOTED HEREON. THIS MAP SHOULD NOT BE CONSIDERED AN ORIGINAL SIGNED AND SEALED SURVEY UNLESS IT BEARS THE EMBOSSED SEAL OR THE DIGITALLY ENCRYPTED ELECTRONIC SIGNATURE OF THE PROFESSIONAL LAND SURVEYOR BELOW.

MICHAEL L EARLEY PE LS — LICENSE # 70224

SCALE:
HORZ.: 1" = 40'
VERT.:
DATUM:
HORZ.: NAD 83
VERT.: NAVD 88
40 20 0 40
GRAPHIC SCALE

FUSS & O'NEILL
146 HARTFORD ROAD
MANCHESTER, CONNECTICUT 06040
860.646.2469
www.fando.com

CITY OF MERIDEN
PROPERTY BOUNDARY SURVEY
BRIDGE REPLACEMENTS AND UTILITY IMPROVEMENTS
BUTLER STREET AND HANOVER STREET
MERIDEN CONNECTICUT

PROJ. No.: 20170932.C10
DATE: 03/20/2020

VB-02

File Path: H:\DWG\P20170932\C10\SurveyPlan\20170932C10_SRV01.dwg Layout: VB-02 Plotted: Fri, January 12, 2024 - 6:20 PM User: mearley
Plotter: AUTOCAD PDF (GENERAL DOCUMENTATION).PC3 CTB File: FO.STB
MS VIEW:
LAYER STATE:

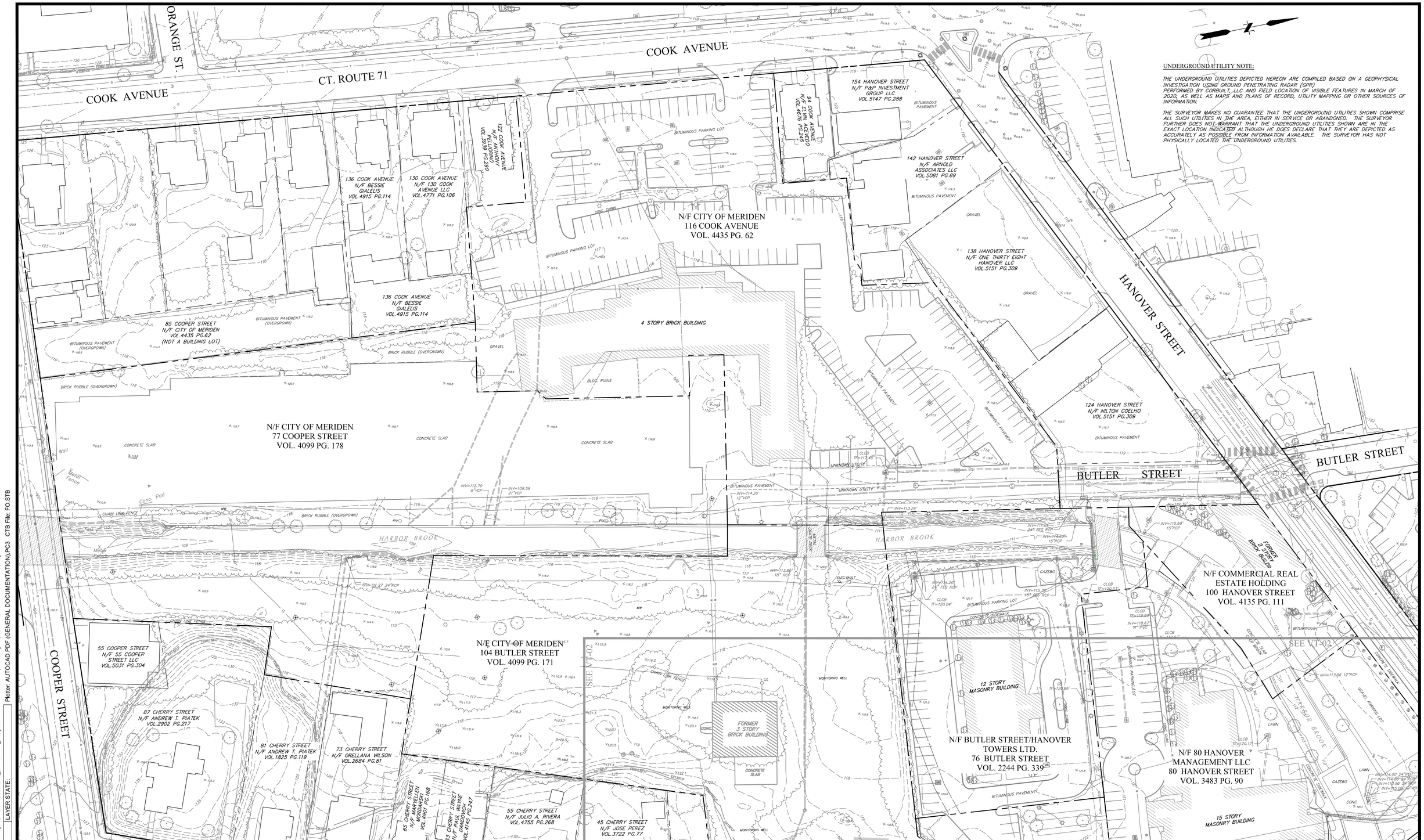

No.	DATE	DESCRIPTION	DESIGNER	REVIEWER
1.	8/2/2021	SUPPLEMENTAL UTILITIES LOCATED BY MCA		MLE

SEAL

SEAL

TO MY KNOWLEDGE AND BELIEF, THIS MAP IS SUBSTANTIALLY CORRECT AS NOTED HEREON. THIS MAP SHOULD NOT BE CONSIDERED ORIGINAL SIGNED AND SEALED SURVEY UNLESS IT BEARS THE EMBOSSED SEAL OR THE DIGITALLY ENCRYPTED ELECTRONIC SIGNATURE OF THE LICENSED LAND SURVEYOR BELOW.

MICHAEL L EARLEY PE LS — LICENSE # 70224

SCALE:
HORZ.: 1" = 40'
VERT.:
DATUM:
HORZ.: NAD 83
VERT.: NAVD 88
40 20 0 40
GRAPHIC SCALE

FUSS & O'NEILL
146 HARTFORD ROAD
MANCHESTER, CONNECTICUT 06040
860.646.2469
www.fando.com

CITY OF MERIDEN
TOPOGRAPHIC SURVEY
BRIDGE REPLACEMENTS AND UTILITY IMPROVEMENTS
BUTLER STREET AND HANOVER STREET
MERIDEN — CONNECTICUT

PROJ. No.: 20170932C10
DATE: 03/20/2020

VT-01

File Path: H:\DWG\P2017\0932\C10\Survey\Plan\20170932C10_SRV01.dwg Layout: VT-01 Plotted: Fri, January 12, 2024 - 6:20 PM User: mearley
Plotter: AUTOCAD PDF (GENERAL DOCUMENTATION).PC3 CTB File: FO.STB
LAYER STATE:
MS VIEW:

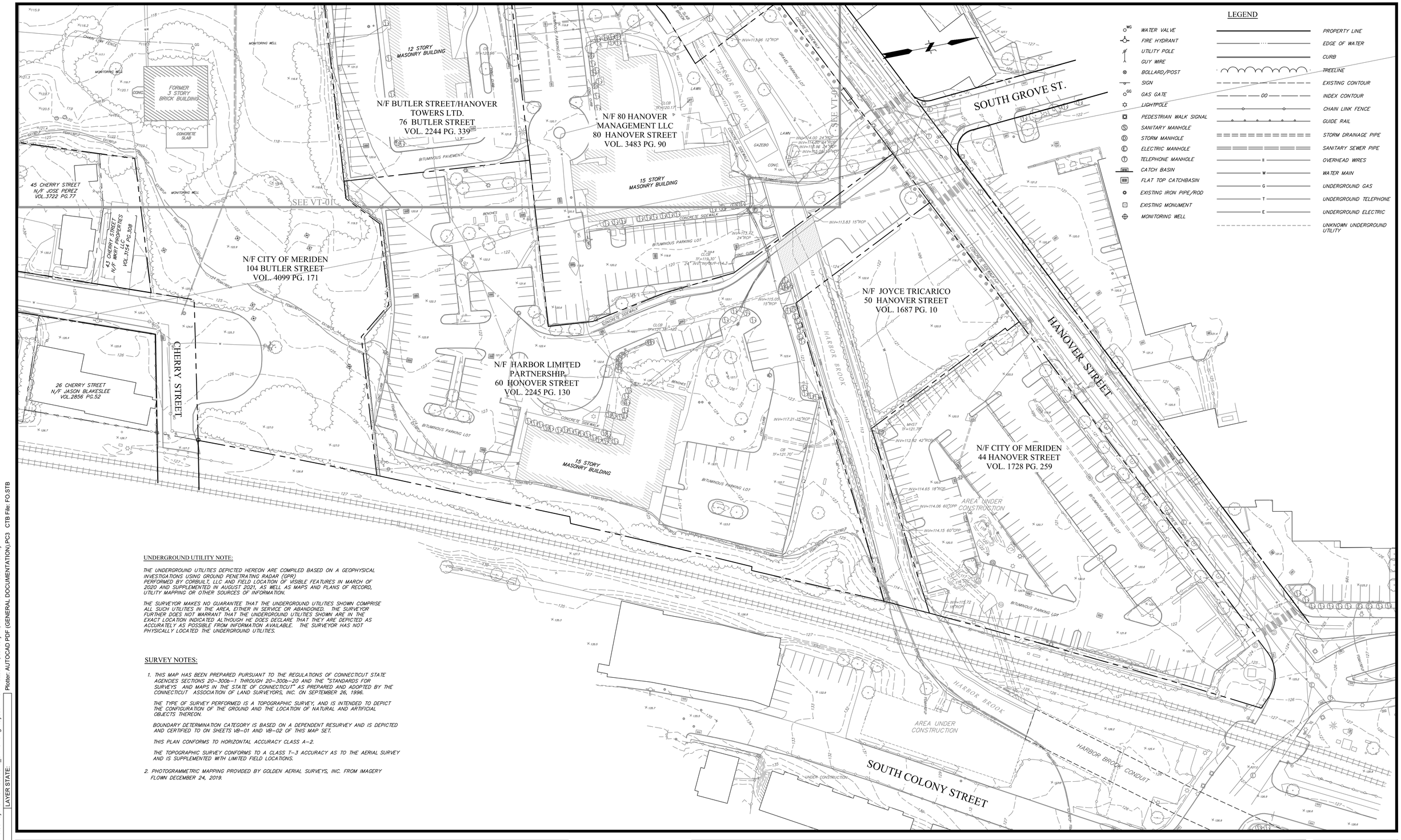

UNDERGROUND UTILITY NOTE:

THE UNDERGROUND UTILITIES DEPICTED HEREON ARE COMPILED BASED ON A GEOPHYSICAL INVESTIGATIONS USING GROUND PENETRATING RADAR (GPR) PERFORMED BY CORBUILT, LLC AND FIELD LOCATION OF VISIBLE FEATURES IN MARCH OF 2020 AND SUPPLEMENTED IN AUGUST 2021, AS WELL AS MAPS AND PLANS OF RECORD, UTILITY MAPPING OR OTHER SOURCES OF INFORMATION.

THE SURVEYOR MAKES NO GUARANTEE THAT THE UNDERGROUND UTILITIES SHOWN COMPRISE ALL SUCH UTILITIES IN THE AREA, EITHER IN SERVICE OR ABANDONED. THE SURVEYOR FURTHER DOES NOT WARRANT THAT THE UNDERGROUND UTILITIES SHOWN ARE IN THE EXACT LOCATION INDICATED ALTHOUGH HE DOES DECLARE THAT THEY ARE DEPICTED AS ACCURATELY AS POSSIBLE FROM INFORMATION AVAILABLE. THE SURVEYOR HAS NOT PHYSICALLY LOCATED THE UNDERGROUND UTILITIES.

SURVEY NOTES:

1. THIS MAP HAS BEEN PREPARED PURSUANT TO THE REGULATIONS OF CONNECTICUT STATE AGENCIES SECTIONS 20–300b–1 THROUGH 20–300b–20 AND THE "STANDARDS FOR SURVEYS AND MAPS IN THE STATE OF CONNECTICUT" AS PREPARED AND ADOPTED BY THE CONNECTICUT ASSOCIATION OF LAND SURVEYORS, INC. ON SEPTEMBER 26, 1996.

   THE TYPE OF SURVEY PERFORMED IS A TOPOGRAPHIC SURVEY, AND IS INTENDED TO DEPICT THE CONFIGURATION OF THE GROUND AND THE LOCATION OF NATURAL AND ARTIFICIAL OBJECTS THEREON.

   BOUNDARY DETERMINATION CATEGORY IS BASED ON A DEPENDENT RESURVEY AND IS DEPICTED AND CERTIFIED TO ON SHEETS VB–01 AND VB–02 OF THIS MAP SET.

   THIS PLAN CONFORMS TO HORIZONTAL ACCURACY CLASS A–2.

   THE TOPOGRAPHIC SURVEY CONFORMS TO A CLASS T–3 ACCURACY AS TO THE AERIAL SURVEY AND IS SUPPLEMENTED WITH LIMITED FIELD LOCATIONS.

2. PHOTOGRAMMETRIC MAPPING PROVIDED BY GOLDEN AERIAL SURVEYS, INC. FROM IMAGERY FLOWN DECEMBER 24, 2019.

No.	DATE	DESCRIPTION	DESIGNER	REVIEWER
1.	8/2/2021	SUPPLEMENTAL UTILITIES LOCATED BY MCA		MLE

SEAL

SEAL

TO MY KNOWLEDGE AND BELIEF, THIS MAP IS SUBSTANTIALLY CORRECT AS NOTED HEREON. THIS MAP SHOULD NOT BE ACCEPTED AS ORIGINAL SIGNED AND SEALED SURVEY UNLESS IT BEARS THE ORIGINAL OR THE DIGITALLY ENCRYPTED ELECTRONIC SIGNATURE SEAL OF THE LICENSED LAND SURVEYOR BELOW.

MICHAEL L EARLEY PE LS — LICENSE # 70224

SCALE:
HORZ.: 1" = 40'
VERT.:
DATUM:
HORZ.: NAD 83
VERT.: NAVD 88
40 20 0 40
GRAPHIC SCALE

FUSS & O'NEILL
146 HARTFORD ROAD
MANCHESTER, CONNECTICUT 06040
860.646.2469
www.fando.com

CITY OF MERDEN
TOPOGRAPHIC SURVEY
BRIDGE REPLACEMENTS AND UTILITY IMPROVEMENTS
BUTLER STREET AND HANOVER STREET
MERDIEN — CONNECTICUT

PROJ. No.: 20170932C10
DATE: 03/20/2020
VT-02

File Path: H:\DWG\P2017\0932\C10\Survey\Plan\20170932C10_SRV01.dwg Layout: VT-02 Plotted: Fri, January 12, 2024 - 6:20 PM User: mearley
MS VIEW: Plotter: AUTOCAD PDF (GENERAL DOCUMENTATION).PC3 CTB File: FO.STB
LAYER STATE:

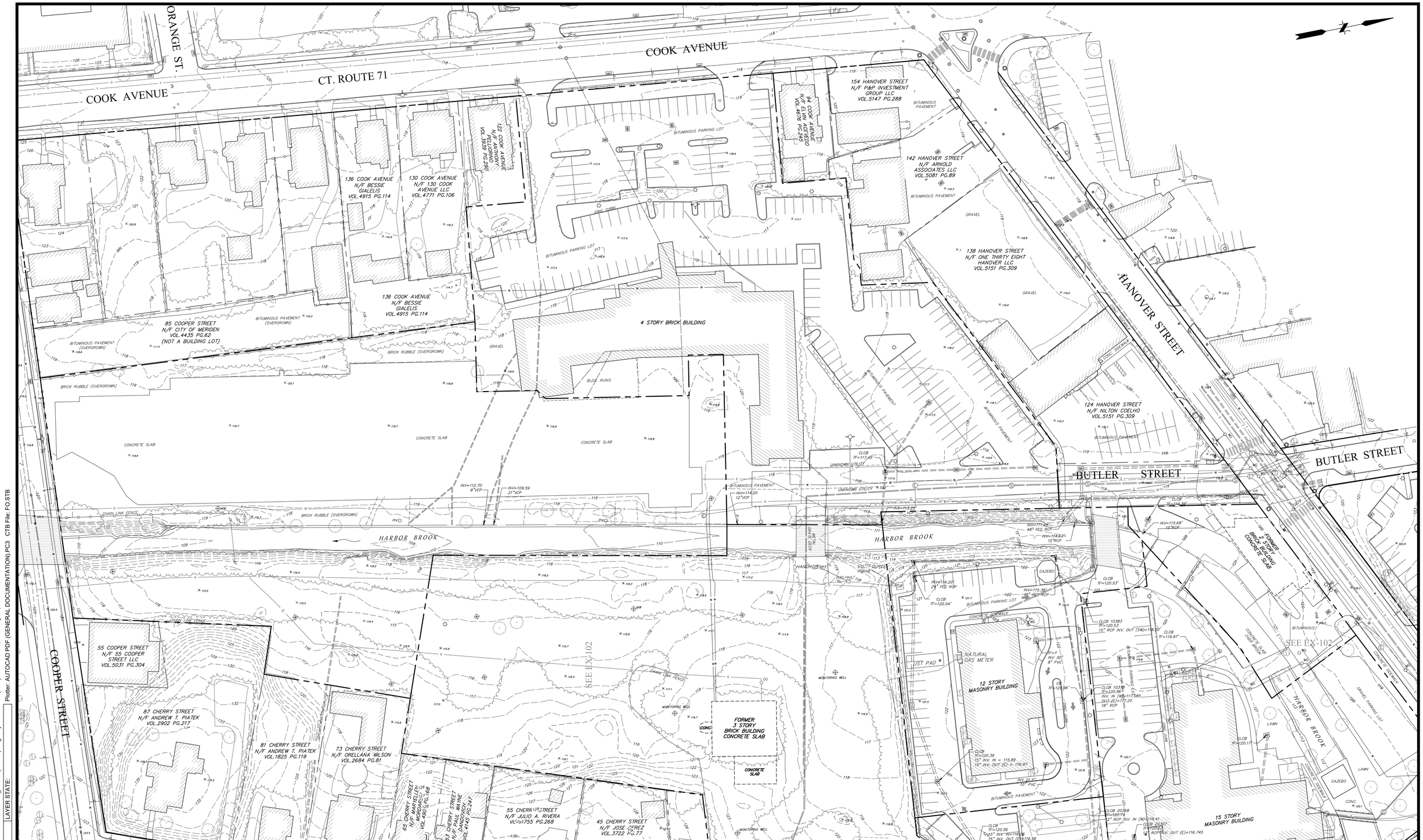

No.	DATE	DESCRIPTION	DESIGNER	REVIEWER
1.				

SEAL

STATE OF CONNECTICUT
DEAN E. AUDET
No. 17623
LICENSED
PROFESSIONAL ENGINEER

SEAL

SCALE:
HORZ.: 1" = 40'
VERT.:
DATUM:
HORZ.: NAD 83
VERT.: NAVD 88
40 20 0 40
GRAPHIC SCALE

FUSS & O'NEILL
146 HARTFORD ROAD
MANCHESTER, CONNECTICUT 06040
860.646.2469
www.fando.com

CITY OF MERIDEN

EXISTING CONDITIONS PLAN

BRIDGE REPLACEMENT AND UTILITY IMPROVEMENTS
BUTLER STREET AND HANOVER STREET

MERIDEN CONNECTICUT

PROJ. No.: 20170932.C38
DATE: FEBRUARY 27, 2024

EX-101

File Path: J:\DWG\P\20170932\C11\Krelk\20170932C10_SRV01(DEMO).dwg, Layout: EX-101 (PH1) Plotted: Tue, February 27, 2024 - 4:51 PM User: shuffman
Plotter: AUTOCAD PDF (GENERAL DOCUMENTATION).PC3 CTB File: FO.STB
LAYER STATE:
MS VIEW:

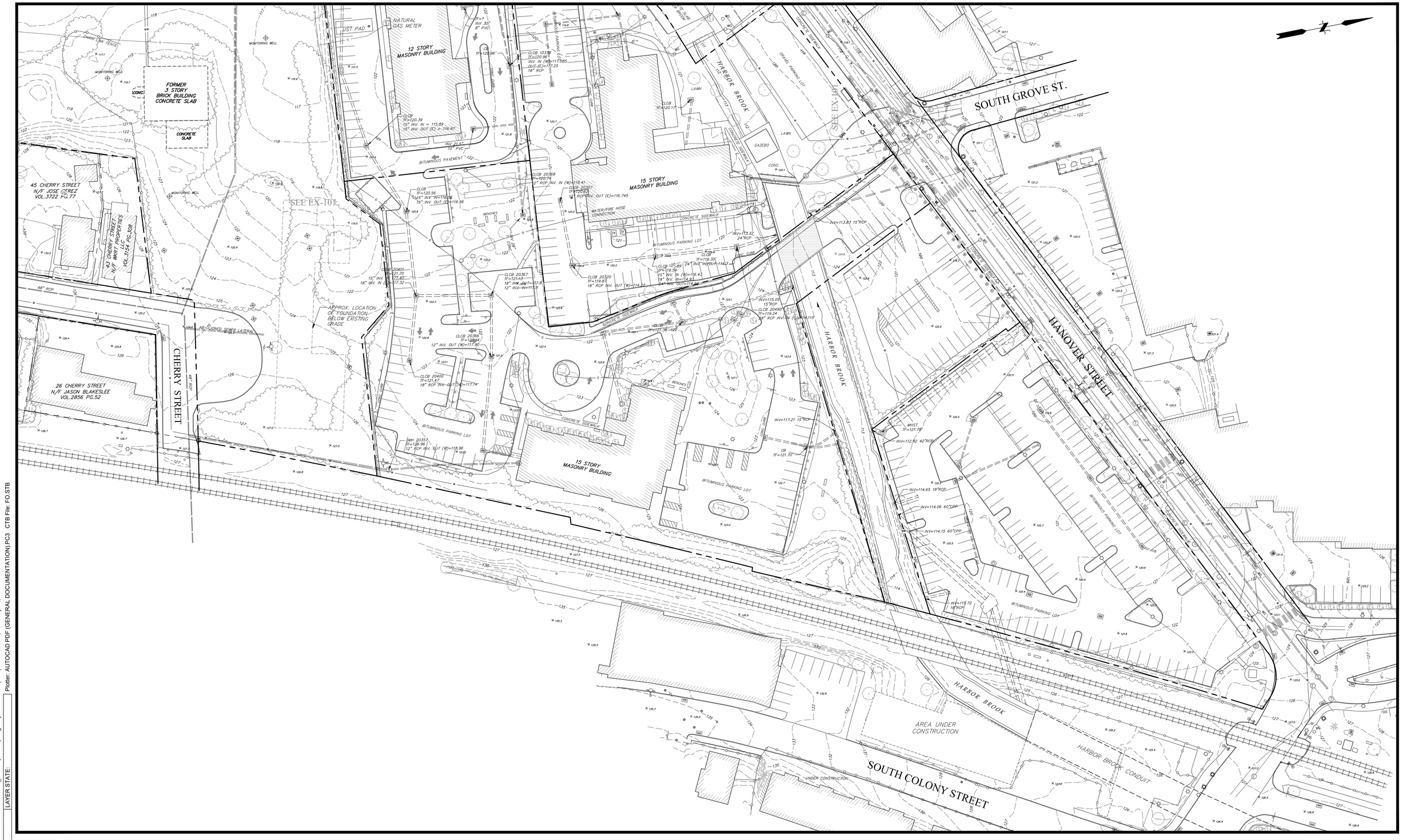

No.	DATE	DESCRIPTION	DESIGNER	REVIEWER
1.				

STATE OF CONNECTICUT DEAN E. AUDET No. 17683 LICENSED PROFESSIONAL ENGINEER

SEAL

SCALE:
HORZ.: 1" = 40'
VERT.:
DATUM:
HORZ.: NAD 83
VERT.: NAVD 88
40 20 0 40
GRAPHIC SCALE

FUSS & O'NEILL
146 HARTFORD ROAD
MANCHESTER, CONNECTICUT 06040
860.646.2469
www.fando.com

CITY OF MERDEN
EXISTING CONDITIONS PLAN
BRIDGE REPLACEMENT AND UTILITY IMPROVEMENTS
BUTLER STREET AND HANOVER STREET
MERDIEN CONNECTICUT

PROJ. No.: 20170932.C38
DATE: FEBRUARY 27, 2024
EX-102

File Path: J:\DWG\P2017\0932\C11\Xrefs\20170932C10_SRV01(DEMO).dwg Layout: EX-102 (PH1) Plotted: Tue, February 27, 2024 - 4:51 PM User: shuffman
Plotter: AUTOCAD PDF (GENERAL DOCUMENTATION).PC3 CTB File: FO.STB
MS VIEW:
LAYER STATE:

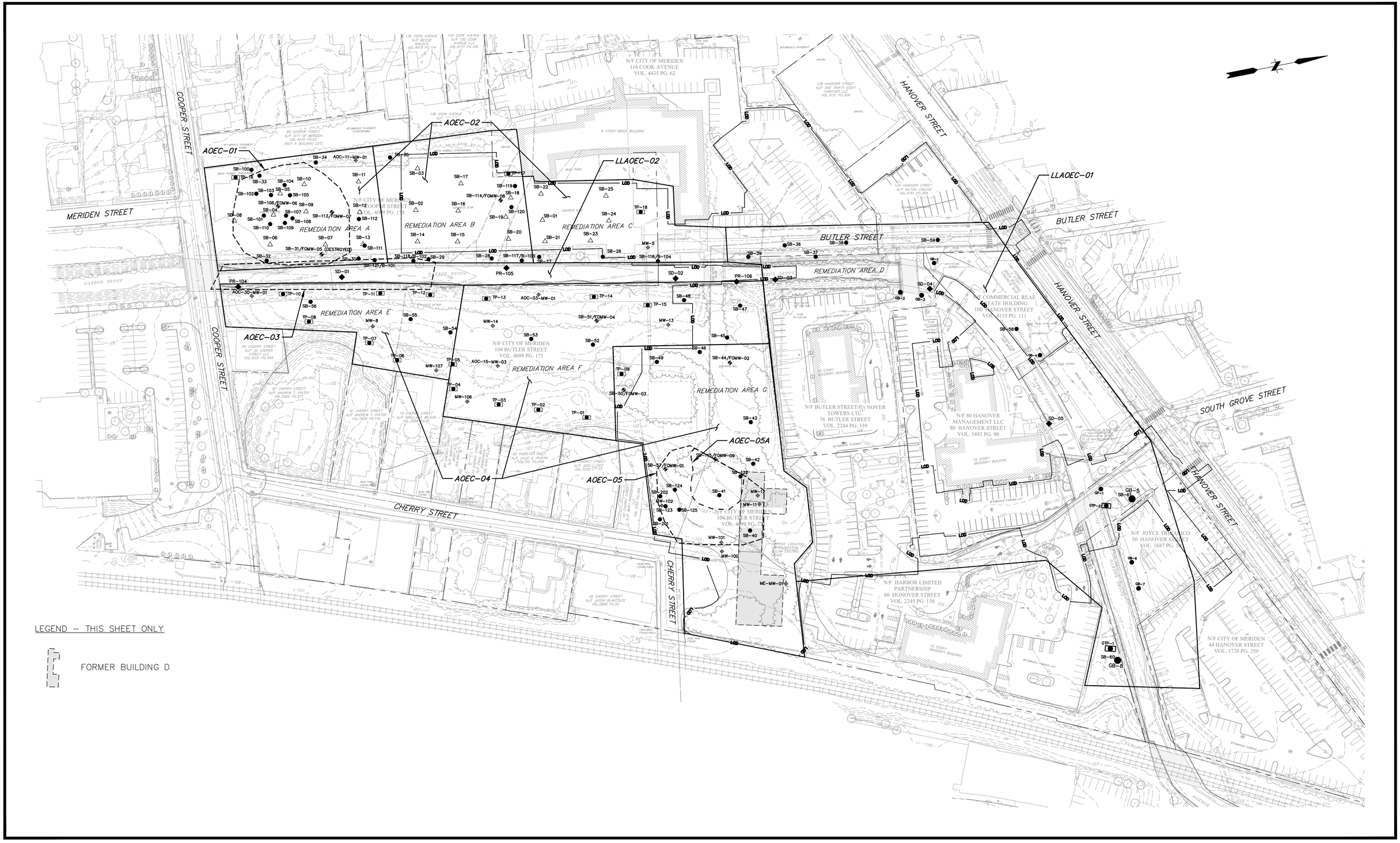

No.	DATE	DESCRIPTION	DESIGNER	REVIEWER

SEAL

SCALE:
HORZ.: 1" = 60'
VERT.:
DATUM:
HORZ.: NAD 83
VERT.: NAVD 88
60 30 0 60
GRAPHIC SCALE

FUSS & O'NEILL
146 HARTFORD ROAD
MANCHESTER, CONNECTICUT 06040
860.646.2469
www.fando.com

CITY OF MERIDEN

AREAS OF ENVIRONMENTAL CONCERN

BRIDGE REPLACEMENTS AND UTILITY IMPROVEMENTS
BUTLER STREET AND HANOVER STREET
MERIDEN CONNECTICUT

PROJ. No.: 20170932.C38
DATE: FEBRUARY 27, 2024

HM-101

File: J:\DWG\P2017\0932\C11\Environmental\20170932C11_STP01.dwg Layout: HM-101 (PHASE 1) Plotted: 2024-02-27 4:51 PM Saved: 2024-02-27 4:04 PM User: SHuffman
MS VIEW: LAYER STATE: PC3: AUTOCAD PDF (GENERAL DOCUMENTATION).PC3 STB/CTB: FO.STB

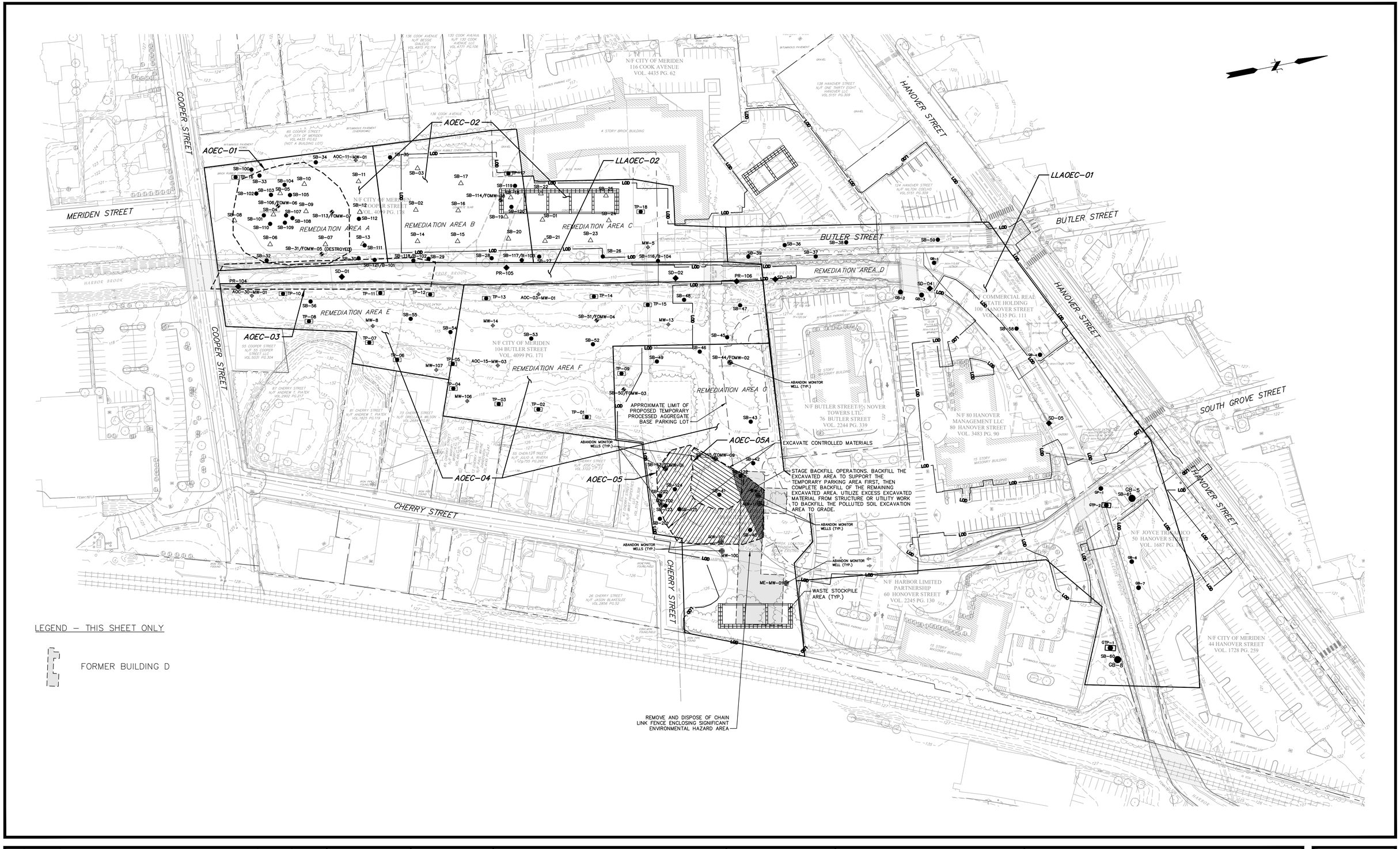

No.	DATE	DESCRIPTION	DESIGNER	REVIEWER

SEAL

STATE OF CONNECTICUT · DEAN E. AUDET · No. 17623 · LICENSED PROFESSIONAL ENGINEER

SCALE:
HORZ.: 1" = 60'
VERT.:
DATUM:
HORZ.: NAD 83
VERT.: NAVD 88
60 30 0 60
GRAPHIC SCALE

FUSS & O'NEILL
146 HARTFORD ROAD
MANCHESTER, CONNECTICUT 06040
860.646.2469
www.fando.com

CITY OF MERIDEN

CONTROLLED MATERIALS HANDLING PLAN

BRIDGE REPLACEMENTS AND UTILITY IMPROVEMENTS
BUTLER STREET AND HANOVER STREET

MERIDEN CONNECTICUT

PROJ. No.: 20170932.C38
DATE: FEBRUARY 27, 2024

HM-102

File: J:\DWG\P2017\0932\C11\Environmental\20170932C11_STP01.dwg Layout: HM-102 (PHASE 1) Plotted: 2024-02-27 4:51 PM Saved: 2024-02-27 4:04 PM User: SHuffman
PC3: AUTOCAD PDF (GENERAL DOCUMENTATION).PC3 STB/CTB: FO.STB
MS VIEW:
LAYER STATE:

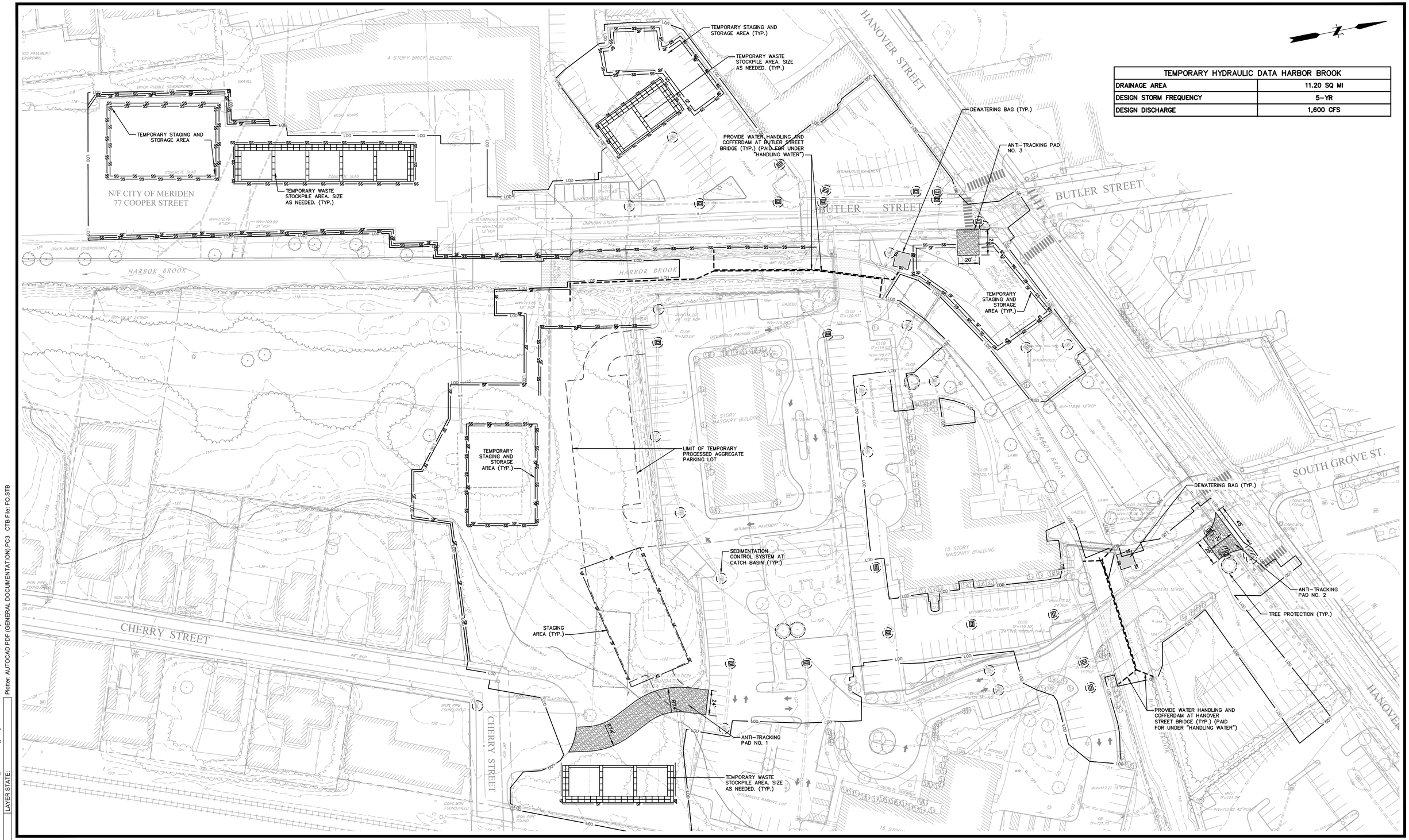

TEMPORARY HYDRAULIC DATA HARBOR BROOK	
DRAINAGE AREA	11.20 SQ MI
DESIGN STORM FREQUENCY	5-YR
DESIGN DISCHARGE	1,600 CFS

File Path: J:\DWG\P2017\0932\C11\Civil\Plan\20170932C11_ESC-01.dwg Layout: CE-101 PH1 Plotted: Tue, February 27, 2024 - 4:51 PM User: shuffman
MS VIEW: LAYER STATE: Plotter: AUTOCAD PDF (GENERAL DOCUMENTATION).PC3 CTB File: FO.STB

No.	DATE	DESCRIPTION	DESIGNER	REVIEWER
1.				

STATE OF CONNECTICUT DEAN E. AUDET No. 17623 LICENSED PROFESSIONAL ENGINEER

SEAL

SCALE:
HORZ.: 1" = 40'
VERT.:
DATUM:
HORZ.: NAD 83
VERT.: NAVD 88
40 20 0 40
GRAPHIC SCALE

FUSS & O'NEILL
146 HARTFORD ROAD
MANCHESTER, CONNECTICUT 06040
860.646.2469
www.fando.com

CITY OF MERIDEN

EROSION & SEDIMENTATION CONTROL PLAN

BRIDGE REPLACEMENTS AND UTILITY IMPROVEMENTS
BUTLER STREET AND HANOVER STREET
MERIDEN CONNECTICUT

PROJ. No.: 20170932.C38
DATE: FEBRUARY 27, 2024

CE-101

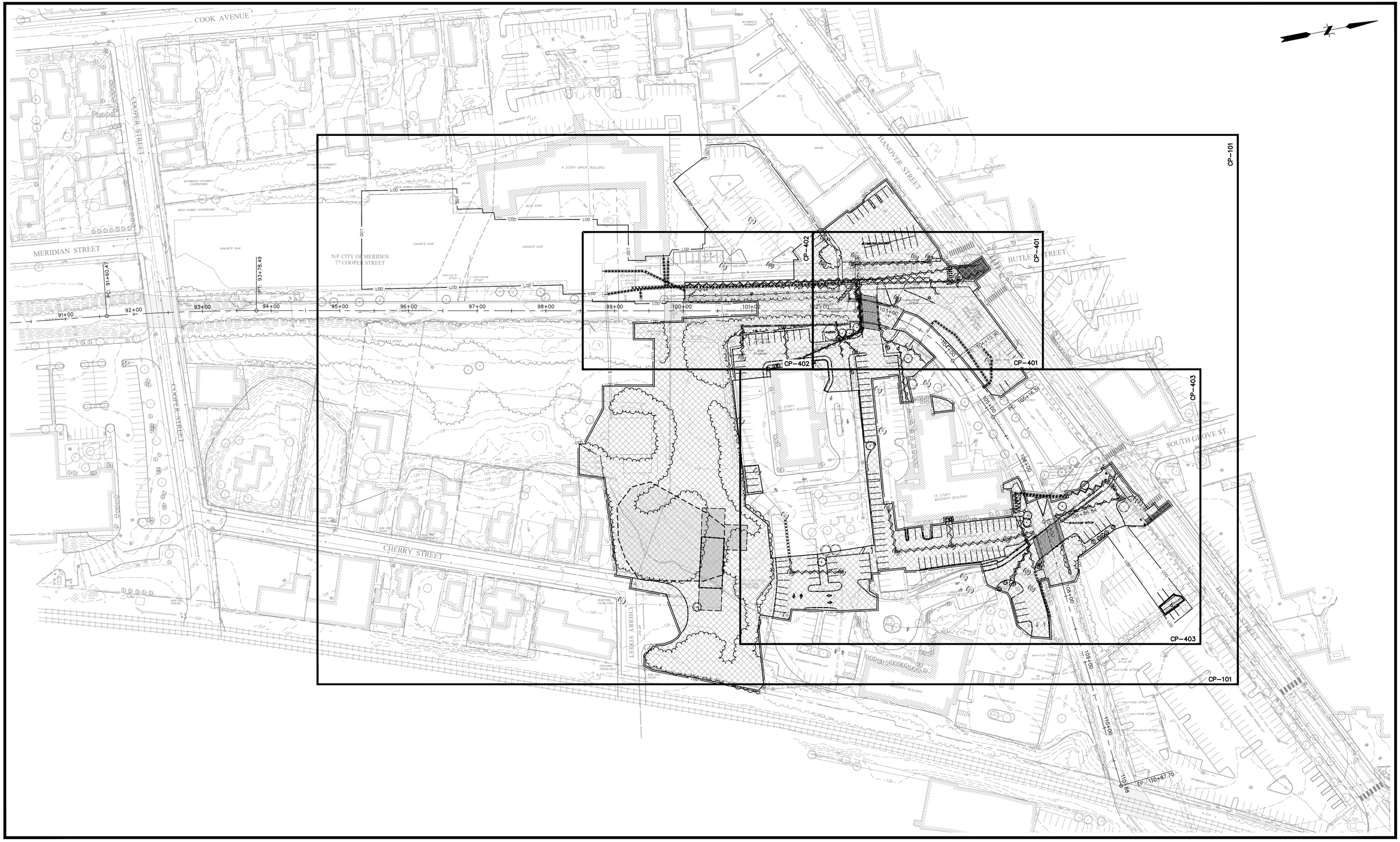

No.	DATE	DESCRIPTION	DESIGNER	REVIEWER
1.				

STATE OF CONNECTICUT · DEAN E. AUDER · No. 17623 · LICENSED PROFESSIONAL ENGINEER

SEAL

SCALE:
HORZ.: 1" = 60'
VERT.:
DATUM:
HORZ.: NAD 83
VERT.: NAVD 88
60 30 0 60
GRAPHIC SCALE

FUSS & O'NEILL
146 HARTFORD ROAD
MANCHESTER, CONNECTICUT 06040
860.646.2469
www.fando.com

CITY OF MERIDEN

SITE PREPARATION INDEX PLAN

BRIDGE REPLACEMENTS AND UTILITY IMPROVEMENTS
BUTLER STREET AND HANOVER STREET

MERIDEN CONNECTICUT

PROJ. No.: 20170932.C38
DATE: FEBRUARY 27, 2024

CP-100

File Path: J:\DWG\P20170932\C11\Civil\Plan\20170932C11_ESC-01.dwg Layout: CP-100 PH1 Plotted: Tue, February 27, 2024 - 4:51 PM User: shuffman
MS VIEW: LAYER STATE: Plotter: AUTOCAD PDF (GENERAL DOCUMENTATION).PC3 CTB File: FO.STB

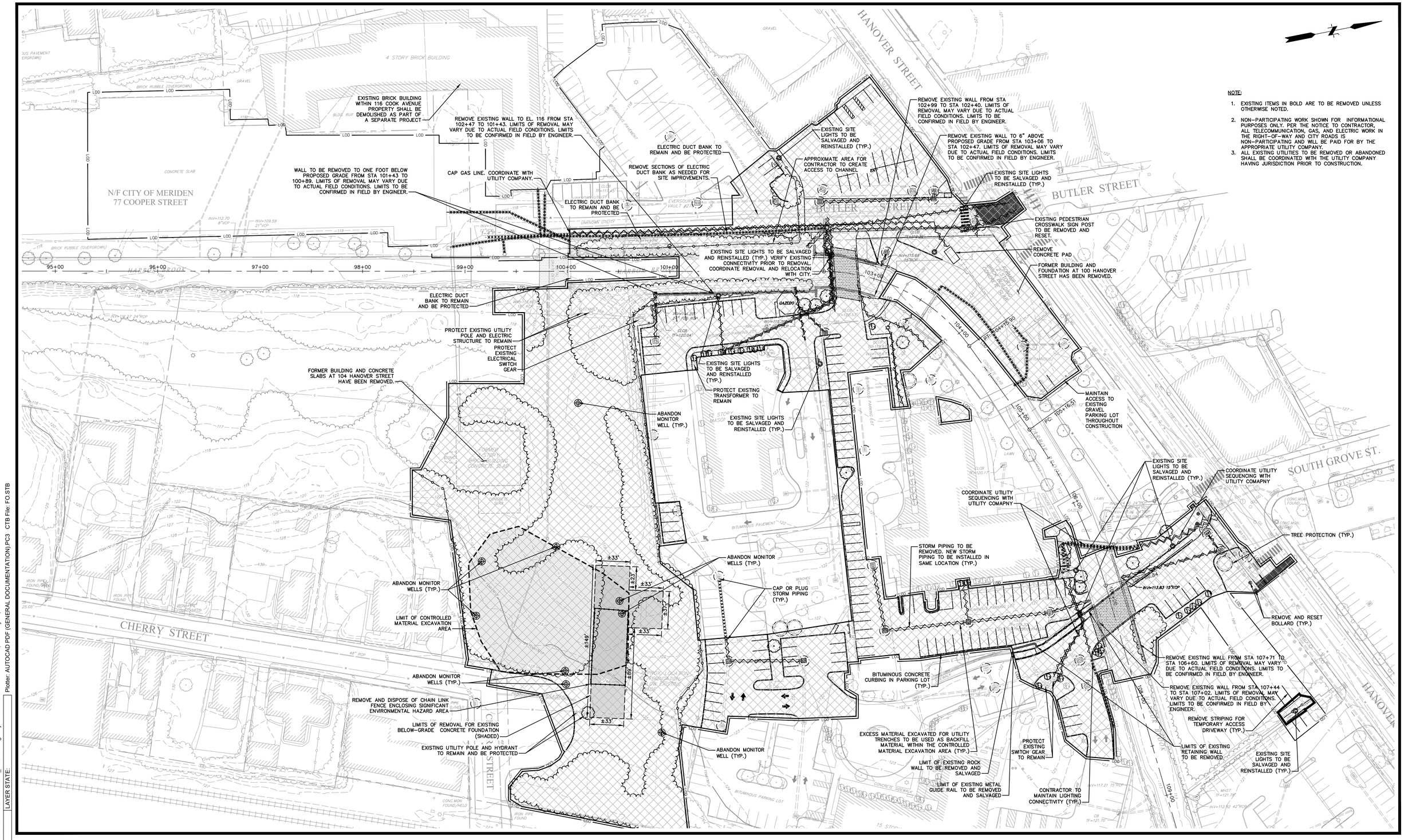

NOTE:

1. EXISTING ITEMS IN BOLD ARE TO BE REMOVED UNLESS OTHERWISE NOTED.
2. NON-PARTICIPATING WORK SHOWN FOR INFORMATIONAL PURPOSES ONLY. PER THE NOTICE TO CONTRACTOR, ALL TELECOMMUNICATION, GAS, AND ELECTRIC WORK IN THE RIGHT-OF-WAY AND CITY ROADS IS NON-PARTICIPATING AND WILL BE PAID FOR BY THE APPROPRIATE UTILITY COMPANY.
3. ALL EXISTING UTILITIES TO BE REMOVED OR ABANDONED SHALL BE COORDINATED WITH THE UTILITY COMPANY HAVING JURISDICTION PRIOR TO CONSTRUCTION.

No.	DATE	DESCRIPTION	DESIGNER	REVIEWER
1.				

STATE OF CONNECTICUT DEAN E. AUDETT No. 17684 LICENSED PROFESSIONAL ENGINEER

SEAL

SCALE:
HORZ.: 1" = 40'
VERT.:
DATUM:
HORZ.: NAD 83
VERT.: NAVD 88
40 20 0 40
GRAPHIC SCALE

FUSS & O'NEILL
146 HARTFORD ROAD
MANCHESTER, CONNECTICUT 06040
860.646.2469
www.fando.com

CITY OF MERIDEN

SITE PREPARATION PLAN

BRIDGE REPLACEMENTS AND UTILITY IMPROVEMENTS
BUTLER STREET AND HANOVER STREET
MERIDEN CONNECTICUT

PROJ. No.: 20170932.C38
DATE: FEBRUARY 27, 2024

CP-101

File Path: J:\DWG\P\20170932\C11\Civil\Plan\20170932C11_ESC-01.dwg Layout: CP-101 PH1 Plotted: Tue, February 27, 2024 - 4:52 PM User: shuffman
Plotter: AUTOCAD PDF (GENERAL DOCUMENTATION).PC3 CTB File: FO.STB
MS VIEW:
LAYER STATE:

NOTE:

1. EXISTING ITEMS IN BOLD ARE TO BE REMOVED UNLESS OTHERWISE NOTED.
2. NON-PARTICIPATING WORK SHOWN FOR INFORMATIONAL PURPOSES ONLY. PER THE NOTICE TO CONTRACTOR, ALL TELECOMMUNICATION, GAS, AND ELECTRIC WORK IN THE RIGHT-OF-WAY AND CITY ROADS IS NON-PARTICIPATING AND WILL BE PAID FOR BY THE APPROPRIATE UTILITY COMPANY.
3. ALL EXISTING UTILITIES TO BE REMOVED OR ABANDONED SHALL BE COORDINATED WITH THE UTILITY COMPANY HAVING JURISDICTION PRIOR TO CONSTRUCTION.

No.	DATE	DESCRIPTION	DESIGNER	REVIEWER
1.				

STATE OF CONNECTICUT
DEAN E. AUDET
No. 17623
LICENSED PROFESSIONAL ENGINEER

SEAL

SCALE:
HORZ.: 1" = 10'
VERT.:
DATUM:
HORZ.: NAD 83
VERT.: NAVD 88
10 5 0 10
GRAPHIC SCALE

FUSS & O'NEILL
146 HARTFORD ROAD
MANCHESTER, CONNECTICUT 06040
860.646.2469
www.fando.com

CITY OF MERIDEN

BUTLER BRIDGE NORTH ENLARGEMENT PLAN

BRIDGE REPLACEMENTS AND UTILITY IMPROVEMENTS
BUTLER STREET AND HANOVER STREET
MERIDEN CONNECTICUT

PROJ. No.: 20170932.C38
DATE: FEBRUARY 27, 2024

CP-401

File Path: J:\DWG\P2017\0932\C11\Civil\Plan\20170932C11_ESC-01.dwg Layout: CP-401 PH1 Plotted: Tue, February 27, 2024 - 4:52 PM User: shuffman
Plotter: AUTOCAD PDF (GENERAL DOCUMENTATION).PC3 CTB File: FO.STB
MS VIEW:
LAYER STATE:

NOTE:

1. EXISTING ITEMS IN BOLD ARE TO BE REMOVED UNLESS OTHERWISE NOTED.
2. NON-PARTICIPATING WORK SHOWN FOR INFORMATIONAL PURPOSES ONLY. PER THE NOTICE TO CONTRACTOR, ALL TELECOMMUNICATION, GAS, AND ELECTRIC WORK IN THE RIGHT-OF-WAY AND CITY ROADS IS NON-PARTICIPATING AND WILL BE PAID FOR BY THE APPROPRIATE UTILITY COMPANY.
3. ALL EXISTING UTILITIES TO BE REMOVED OR ABANDONED SHALL BE COORDINATED WITH THE UTILITY COMPANY HAVING JURISDICTION PRIOR TO CONSTRUCTION.

EXISTING BRICK BUILDING WITHIN 116 COOK AVENUE PROPERTY SHALL BE DEMOLISHED AS PART OF A SEPARATE PROJECT

REMOVE EXISTING WALL TO EL. 116 FROM STA 102+47 TO 101+43. LIMITS OF REMOVAL MAY VARY DUE TO ACTUAL FIELD CONDITIONS. LIMITS TO BE CONFIRMED IN FIELD BY ENGINEER.

ELECTRIC DUCT BANK TO REMAIN AND BE PROTECTED

ELECTRIC DUCT BANK TO REMAIN AND BE PROTECTED

CAP GAS LINE. COORDINATE WITH UTILITY COMPANY.

REMOVE SECTIONS OF ELECTRIC DUCT BANK AS NEEDED FOR SITE IMPROVEMENTS.

WALL TO BE REMOVED TO ONE FOOT BELOW PROPOSED GRADE FROM STA 101+43 TO 100+89. LIMITS OF REMOVAL MAY VARY DUE TO ACTUAL FIELD CONDITIONS. LIMITS TO BE CONFIRMED IN FIELD BY ENGINEER.

ELECTRIC DUCT BANK TO REMAIN AND BE PROTECTED

EXISTING SITE LIGHTS TO BE SALVAGED AND REINSTALLED (TYP.)

PROTECT EXISTING UTILITY POLE AND ELECTRIC STRUCTURE TO REMAIN

PROTECT EXISTING ELECTRICAL SWITCH GEAR

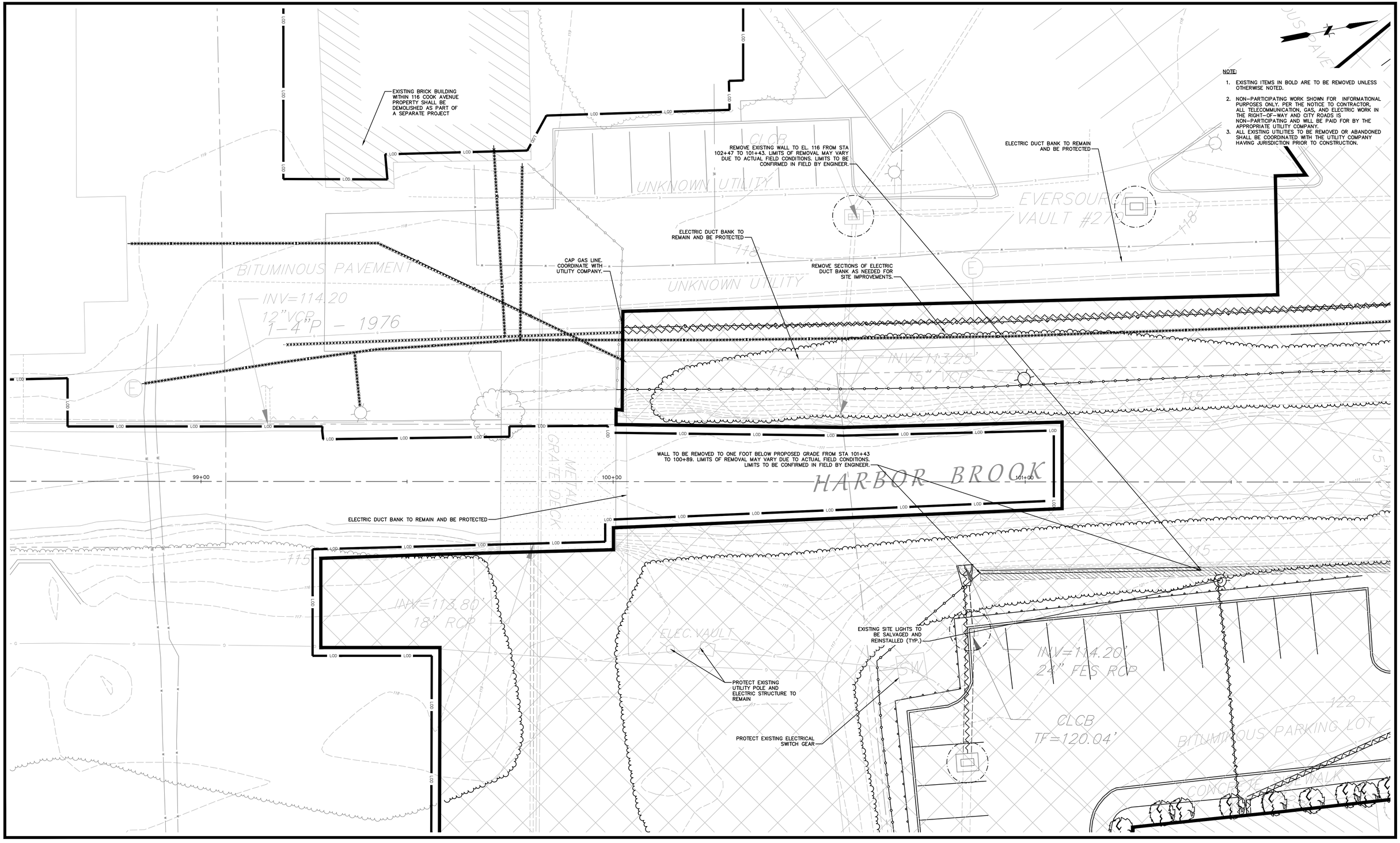

No.	DATE	DESCRIPTION	DESIGNER	REVIEWER
1.				

STATE OF CONNECTICUT · SEAN E. AUBERT · No. 17623 · LICENSED PROFESSIONAL ENGINEER

SEAL

SCALE:
HORZ.: 1" = 10'
VERT.:
DATUM:
HORZ.: NAD 83
VERT.: NAVD 88
10 5 0 10
GRAPHIC SCALE

FUSS & O'NEILL
146 HARTFORD ROAD
MANCHESTER, CONNECTICUT 06040
860.646.2469
www.fando.com

CITY OF MERIDEN

BUTLER BRIDGE SOUTH ENLARGEMENT PLAN

BRIDGE REPLACEMENTS AND UTILITY IMPROVEMENTS
BUTLER STREET AND HANOVER STREET

MERIDEN CONNECTICUT

PROJ. No.: 20170932.C38
DATE: FEBRUARY 27, 2024

CP-402

File Path: J:\DWG\P\20170932\C11\Civil\Plan\20170932C11_ESC-01.dwg Layout: CP-402 PH1 Plotted: Tue, February 27, 2024 - 4:52 PM User: shuffman
Plotter: AUTOCAD PDF (GENERAL DOCUMENTATION).PC3 CTB File: FO.STB
LAYER STATE:
MS VIEW:

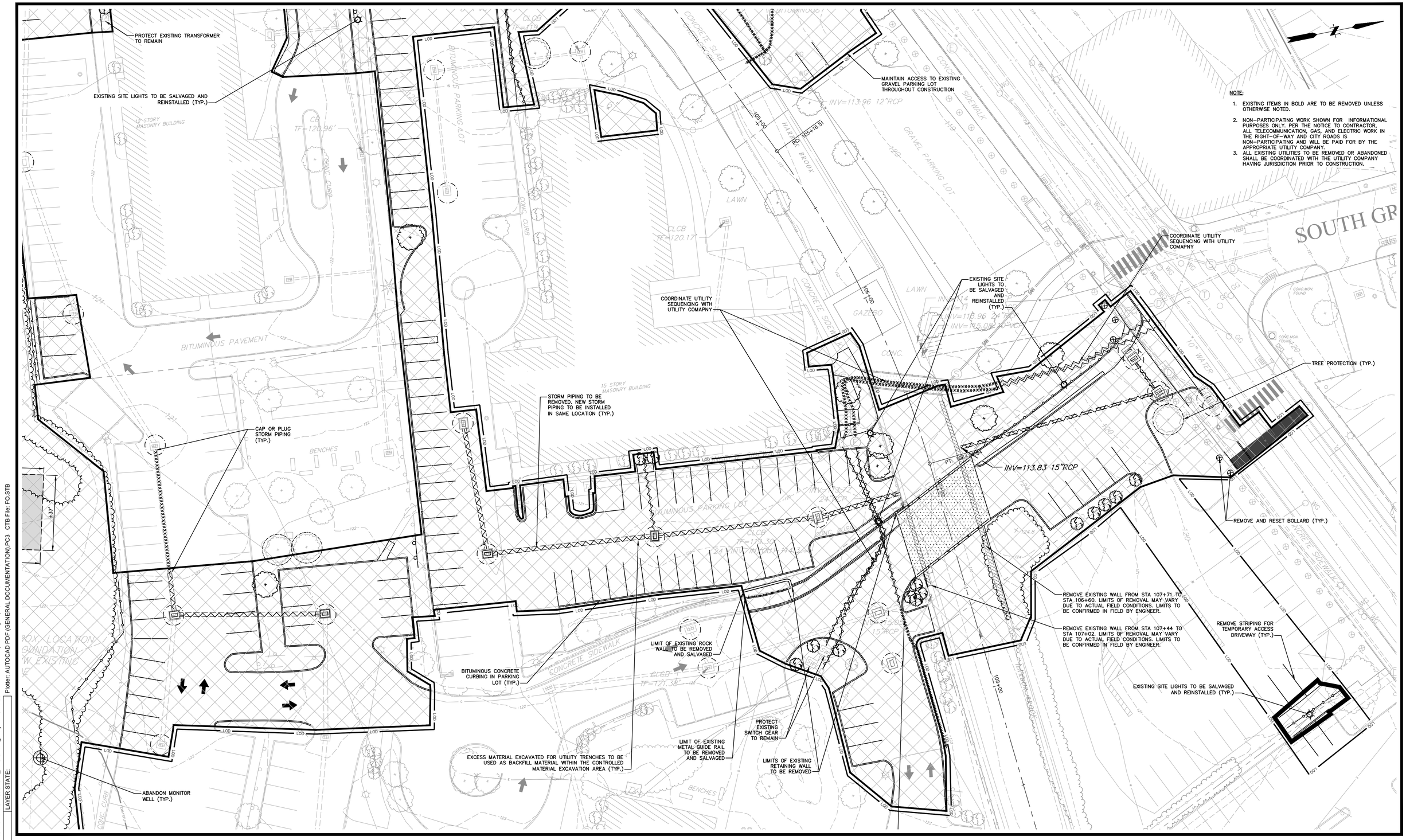

NOTE:

1. EXISTING ITEMS IN BOLD ARE TO BE REMOVED UNLESS OTHERWISE NOTED.
2. NON-PARTICIPATING WORK SHOWN FOR INFORMATIONAL PURPOSES ONLY. PER THE NOTICE TO CONTRACTOR, ALL TELECOMMUNICATION, GAS, AND ELECTRIC WORK IN THE RIGHT-OF-WAY AND CITY ROADS IS NON-PARTICIPATING AND WILL BE PAID FOR BY THE APPROPRIATE UTILITY COMPANY.
3. ALL EXISTING UTILITIES TO BE REMOVED OR ABANDONED SHALL BE COORDINATED WITH THE UTILITY COMPANY HAVING JURISDICTION PRIOR TO CONSTRUCTION.

No.	DATE	DESCRIPTION	DESIGNER	REVIEWER
1.				

STATE OF CONNECTICUT · DEAN E. AUDET · No. 17623 · LICENSED PROFESSIONAL ENGINEER

SEAL

SCALE:
HORZ.: 1" = 20'
VERT.:
DATUM:
HORZ.: NAD 83
VERT.: NAVD 88
20 10 0 20
GRAPHIC SCALE

FUSS & O'NEILL
146 HARTFORD ROAD
MANCHESTER, CONNECTICUT 06040
860.646.2469
www.fando.com

CITY OF MERIDEN

HANOVER BRIDGE ENLARGEMENT PLAN

BRIDGE REPLACEMENTS AND UTILITY IMPROVEMENTS
BUTLER STREET AND HANOVER STREET
MERIDEN CONNECTICUT

PROJ. No.: 20170932.C38
DATE: FEBRUARY 27, 2024

CP-403

File Path: J:\DWG\P2017\0932\C11\Civil\Plan\20170932C11_ESC-01.dwg Layout: CP-403 PH1 Plotted: Tue, February 27, 2024 - 4:52 PM User: shuffman
Plotter: AUTOCAD PDF (GENERAL DOCUMENTATION).PC3 CTB File: FO.STB
MS VIEW:
LAYER STATE:

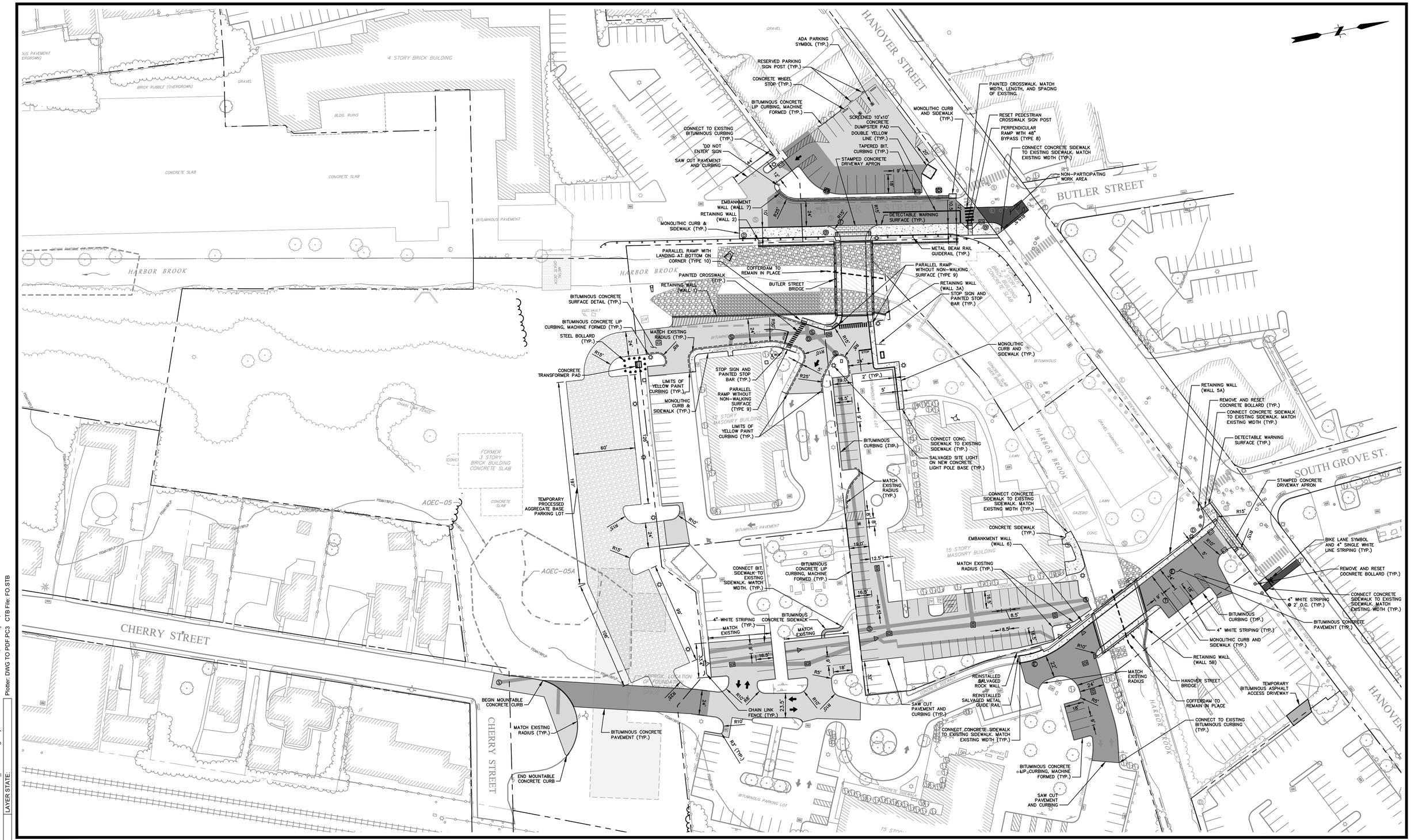

No.	DATE	DESCRIPTION	DESIGNER	REVIEWER
1.				

STATE OF CONNECTICUT · DEAN E. AUDETTE · LICENSED PROFESSIONAL ENGINEER · No. 17683

SEAL

SCALE:
HORZ.: 1" = 40'
VERT.:
DATUM:
HORZ.: NAD 83
VERT.: NAVD 88
40 20 0 40
GRAPHIC SCALE

FUSS & O'NEILL
146 HARTFORD ROAD
MANCHESTER, CONNECTICUT 06040
860.646.2469
www.fando.com

CITY OF MERIDEN

SITE LAYOUT PLAN

BRIDGE REPLACEMENTS AND UTILITY IMPROVEMENTS
BUTLER STREET AND HANOVER STREET

MERIDEN CONNECTICUT

PROJ. No.: 20170932.C38
DATE: FEBRUARY 27, 2024

CS-101

File Path: J:\DWG\P20170932\C11\Civil\Plan\20170932C11_STP-01.dwg Layout: CS-101 PH1 Plotted: Tue, February 27, 2024 - 5:00 PM User: shuffman
Plotter: DWG TO PDF.PC3 CTB File: FO.STB
LAYER STATE:
MS VIEW:

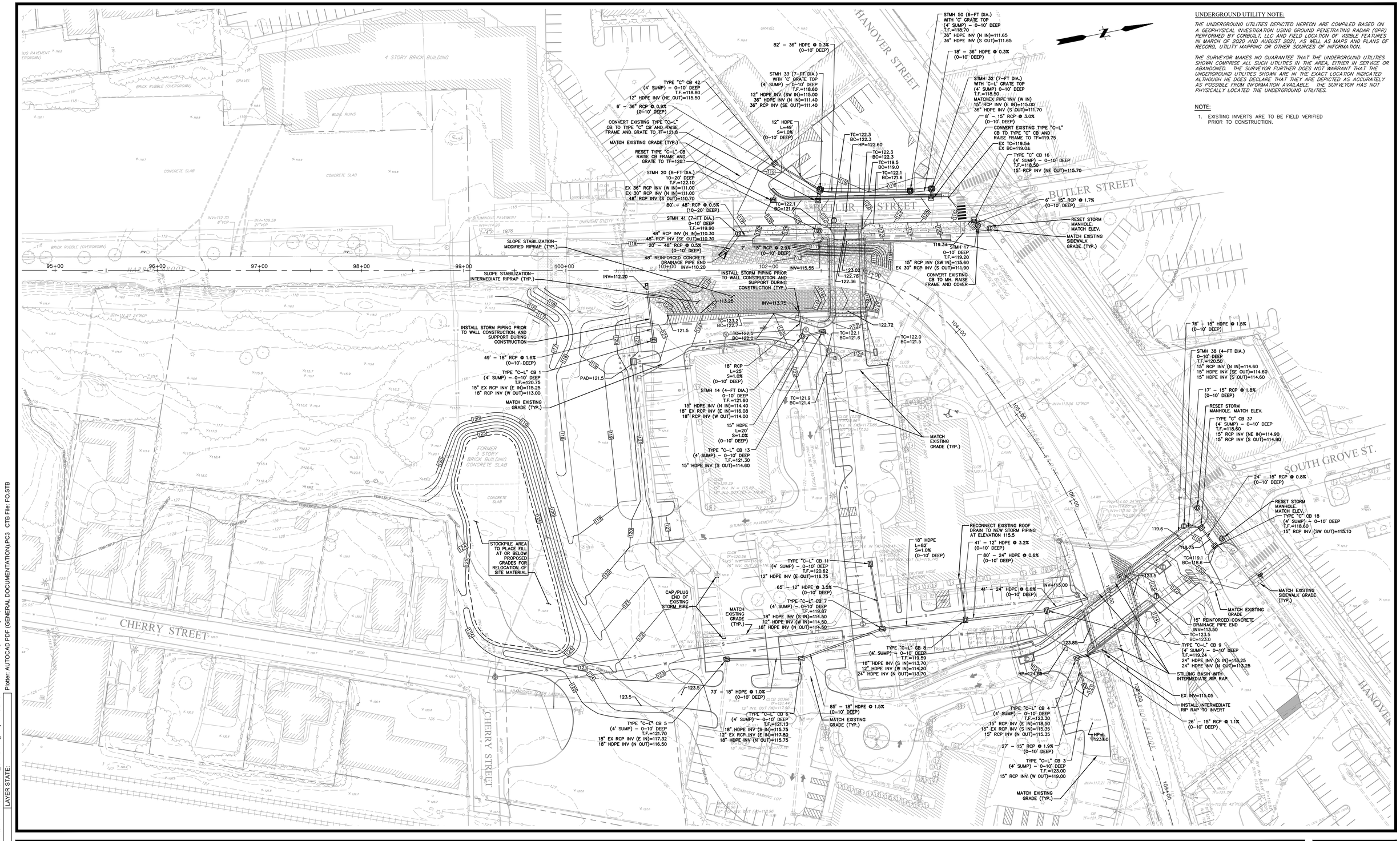

UNDERGROUND UTILITY NOTE:

THE UNDERGROUND UTILITIES DEPICTED HEREON ARE COMPILED BASED ON A GEOPHYSICAL INVESTIGATION USING GROUND PENETRATING RADAR (GPR) PERFORMED BY CORBUILT, LLC AND FIELD LOCATION OF VISIBLE FEATURES IN MARCH OF 2020 AND AUGUST 2021, AS WELL AS MAPS AND PLANS OF RECORD, UTILITY MAPPING OR OTHER SOURCES OF INFORMATION.

THE SURVEYOR MAKES NO GUARANTEE THAT THE UNDERGROUND UTILITIES SHOWN COMPRISE ALL SUCH UTILITIES IN THE AREA, EITHER IN SERVICE OR ABANDONED. THE SURVEYOR FURTHER DOES NOT WARRANT THAT THE UNDERGROUND UTILITIES SHOWN ARE IN THE EXACT LOCATION INDICATED ALTHOUGH HE DOES DECLARE THAT THEY ARE DEPICTED AS ACCURATELY AS POSSIBLE FROM INFORMATION AVAILABLE. THE SURVEYOR HAS NOT PHYSICALLY LOCATED THE UNDERGROUND UTILITIES.

NOTE:

1. EXISTING INVERTS ARE TO BE FIELD VERIFIED PRIOR TO CONSTRUCTION.

No.	DATE	DESCRIPTION	DESIGNER	REVIEWER
1.				

STATE OF CONNECTICUT DEAN E. AUDETT LICENSED PROFESSIONAL ENGINEER No. 17623

SEAL

SCALE:
HORZ.: 1" = 40'
VERT.:
DATUM:
HORZ.: NAD 83
VERT.: NAVD 88
40 20 0 40
GRAPHIC SCALE

FUSS & O'NEILL
146 HARTFORD ROAD
MANCHESTER, CONNECTICUT 06040
860.646.2469
www.fando.com

CITY OF MERIDEN

GRADING & DRAINAGE LAYOUT PLAN

BRIDGE REPLACEMENTS AND UTILITY IMPROVEMENTS
BUTLER STREET AND HANOVER STREET

MERIDEN CONNECTICUT

PROJ. No.: 20170932.C11
DATE: FEBRUARY 27, 2024

CG-101

File Path: J:\DWG\P2017\0932\C11\Civil\Plan\20170932C11_GRD01.dwg Layout: CG-101 PH1 Plotted: Tue, February 27, 2024 - 4:52 PM User: shuffman
Plotter: AUTOCAD PDF (GENERAL DOCUMENTATION).PC3 CTB File: FO.STB
LAYER STATE:
MS VIEW:

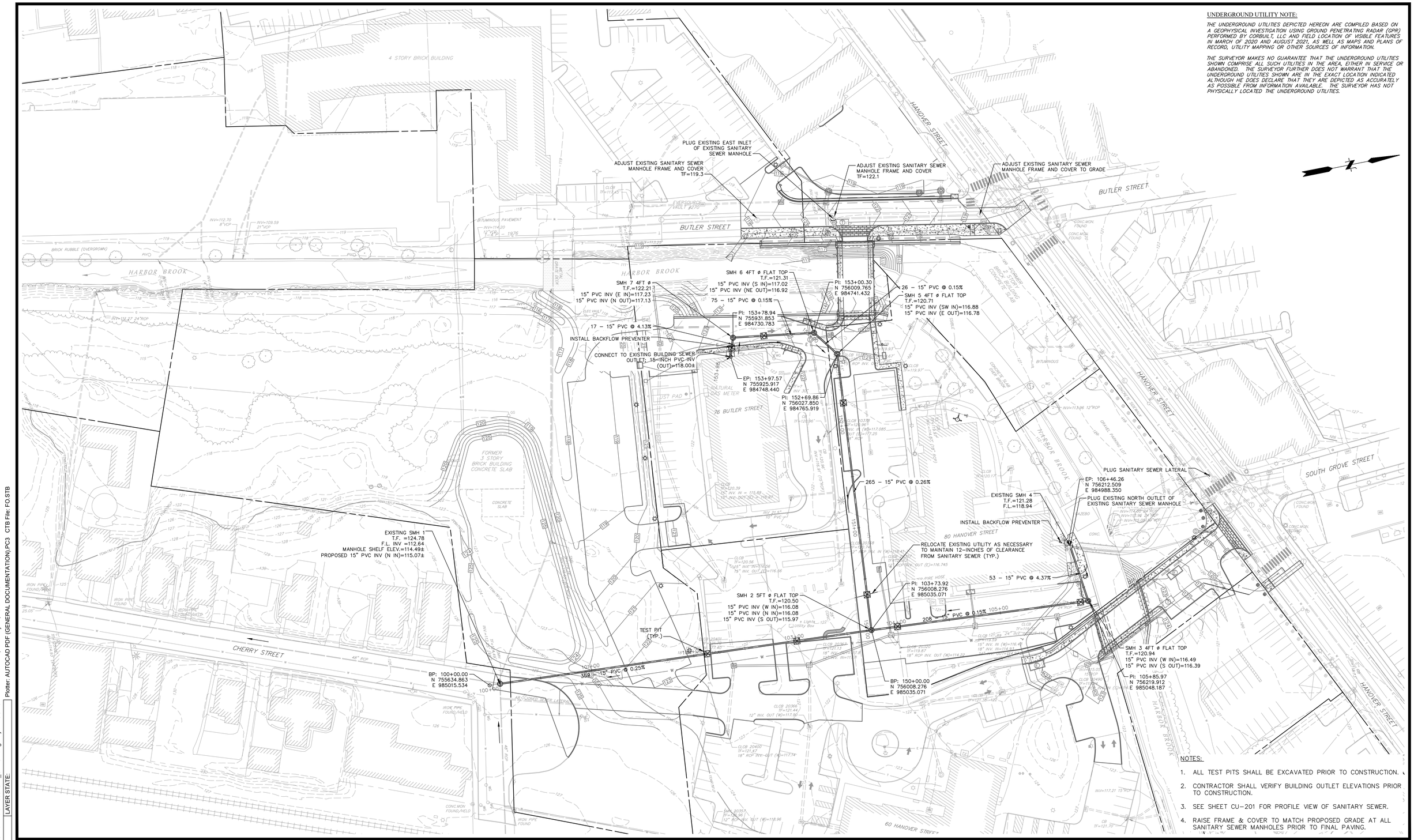

UNDERGROUND UTILITY NOTE:

THE UNDERGROUND UTILITIES DEPICTED HEREON ARE COMPILED BASED ON A GEOPHYSICAL INVESTIGATION USING GROUND PENETRATING RADAR (GPR) PERFORMED BY CORBUILT, LLC AND FIELD LOCATION OF VISIBLE FEATURES IN MARCH OF 2020 AND AUGUST 2021, AS WELL AS MAPS AND PLANS OF RECORD, UTILITY MAPPING OR OTHER SOURCES OF INFORMATION.

THE SURVEYOR MAKES NO GUARANTEE THAT THE UNDERGROUND UTILITIES SHOWN COMPRISE ALL SUCH UTILITIES IN THE AREA, EITHER IN SERVICE OR ABANDONED. THE SURVEYOR FURTHER DOES NOT WARRANT THAT THE UNDERGROUND UTILITIES SHOWN ARE IN THE EXACT LOCATION INDICATED ALTHOUGH HE DOES DECLARE THAT THEY ARE DEPICTED AS ACCURATELY AS POSSIBLE FROM INFORMATION AVAILABLE. THE SURVEYOR HAS NOT PHYSICALLY LOCATED THE UNDERGROUND UTILITIES.

NOTES:

1. ALL TEST PITS SHALL BE EXCAVATED PRIOR TO CONSTRUCTION.
2. CONTRACTOR SHALL VERIFY BUILDING OUTLET ELEVATIONS PRIOR TO CONSTRUCTION.
3. SEE SHEET CU-201 FOR PROFILE VIEW OF SANITARY SEWER.
4. RAISE FRAME & COVER TO MATCH PROPOSED GRADE AT ALL SANITARY SEWER MANHOLES PRIOR TO FINAL PAVING.

No.	DATE	DESCRIPTION	DESIGNER	REVIEWER
1.			WTD./DGB	KAM

STATE OF CONNECTICUT · DEAN E. AUDER · No. 17623 · LICENSED PROFESSIONAL ENGINEER

SEAL

SCALE:
HORZ.: 1" = 40'
VERT.:
DATUM:
HORZ.: NAD 83
VERT.: NAVD 88
40 20 0 40
GRAPHIC SCALE

FUSS & O'NEILL
146 HARTFORD ROAD
MANCHESTER, CONNECTICUT 06040
860.646.2469
www.fando.com

CITY OF MERIDEN

UTILITY PLAN
SANITARY SEWER

BRIDGE REPLACEMENTS AND UTILITY IMPROVEMENTS
BUTLER STREET AND HANOVER STREET

MERIDEN CONNECTICUT

PROJ. No.: 20170932.C38
DATE: FEBRUARY 27, 2024

CU-101

File Path: J:\DWG\P\20170932\C11\Civil\Plan\20170932C11_UTL-01.dwg Layout: CU-101 PH1 Plotted: Tue, February 27, 2024 - 4:53 PM User: shuffman
Plotter: AUTOCAD PDF (GENERAL DOCUMENTATION).PC3 CTB File: FO.STB
LAYER STATE:
MS VIEW:

No.	DATE	DESCRIPTION	DESIGNER	REVIEWER
1.			DC/KMF	KAM

SEAL

STATE OF CONNECTICUT DEAN E. AUDET NO. 17632 LICENSED PROFESSIONAL ENGINEER

SCALE:
HORZ.: 1" = 40'
VERT.:
DATUM:
HORZ.: NAD 83
VERT.: NAVD 88
40 20 0 40
GRAPHIC SCALE

FUSS & O'NEILL
146 HARTFORD ROAD
MANCHESTER, CONNECTICUT 06040
860.646.2469
www.fando.com

CITY OF MERIDEN

UTILITY PLAN
WATER

BRIDGE REPLACEMENTS AND UTILITY IMPROVEMENTS
BUTLER STREET AND HANOVER STREET
MERIDEN CONNECTICUT

PROJ. No.: 20170932.C38
DATE: FEBRUARY 27, 2024

CU-111

File Path: J:\DWG\P2017\0932\C11\Civil\Plan\20170932C11_UTI-01.dwg Layout: CU-111 PH1 Plotted: Tue, February 27, 2024 - 4:53 PM User: shuffman
Plotter: AUTOCAD PDF (GENERAL DOCUMENTATION).PC3 CTB File: FO.STB
MS VIEW: LAYER STATE:

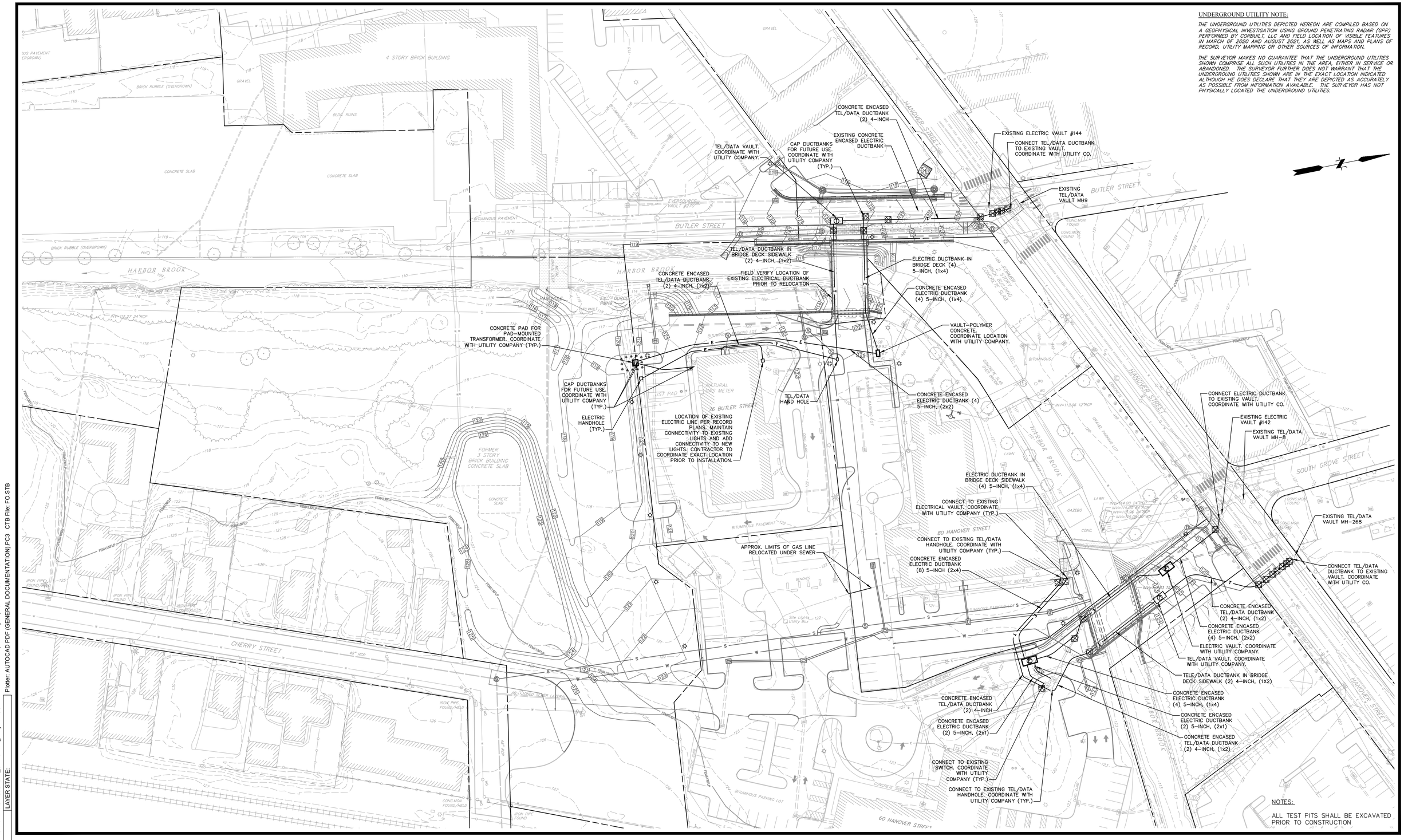

UNDERGROUND UTILITY NOTE:

THE UNDERGROUND UTILITIES DEPICTED HEREON ARE COMPILED BASED ON A GEOPHYSICAL INVESTIGATION USING GROUND PENETRATING RADAR (GPR) PERFORMED BY CORBUILT, LLC AND FIELD LOCATION OF VISIBLE FEATURES IN MARCH OF 2020 AND AUGUST 2021, AS WELL AS MAPS AND PLANS OF RECORD, UTILITY MAPPING OR OTHER SOURCES OF INFORMATION.

THE SURVEYOR MAKES NO GUARANTEE THAT THE UNDERGROUND UTILITIES SHOWN COMPRISE ALL SUCH UTILITIES IN THE AREA, EITHER IN SERVICE OR ABANDONED. THE SURVEYOR FURTHER DOES NOT WARRANT THAT THE UNDERGROUND UTILITIES SHOWN ARE IN THE EXACT LOCATION INDICATED ALTHOUGH HE DOES DECLARE THAT THEY ARE DEPICTED AS ACCURATELY AS POSSIBLE FROM INFORMATION AVAILABLE. THE SURVEYOR HAS NOT PHYSICALLY LOCATED THE UNDERGROUND UTILITIES.

NOTES:

ALL TEST PITS SHALL BE EXCAVATED PRIOR TO CONSTRUCTION

No.	DATE	DESCRIPTION	DESIGNER	REVIEWER
1.				

STATE OF CONNECTICUT DEAN E. AUDET No. 17623 LICENSED PROFESSIONAL ENGINEER

SEAL

SCALE:
HORZ.: 1" = 40'
VERT.:
DATUM:
HORZ.: NAD 83
VERT.: NAVD 88
40 20 0 40
GRAPHIC SCALE

FUSS & O'NEILL
146 HARTFORD ROAD
MANCHESTER, CONNECTICUT 06040
860.646.2469
www.fando.com

CITY OF MERIDEN

UTILITY PLAN GAS, ELECTRICAL & COMMUNICATION

BRIDGE REPLACEMENTS AND UTILITY IMPROVEMENTS
BUTLER STREET AND HANOVER STREET

MERIDEN CONNECTICUT

PROJ. No.: 20170932.C38
DATE: FEBRUARY 27, 2024

CU-121

File Path: J:\DWG\P2017\0932\C11\Civil\Plan\20170932C11_UTL-01.dwg Layout: CU-121 PH1 Plotted: Tue, February 27, 2024 - 4:53 PM User: shuffman
Plotter: AUTOCAD PDF (GENERAL DOCUMENTATION).PC3 CTB File: FO.STB
MS VIEW:
LAYER STATE:

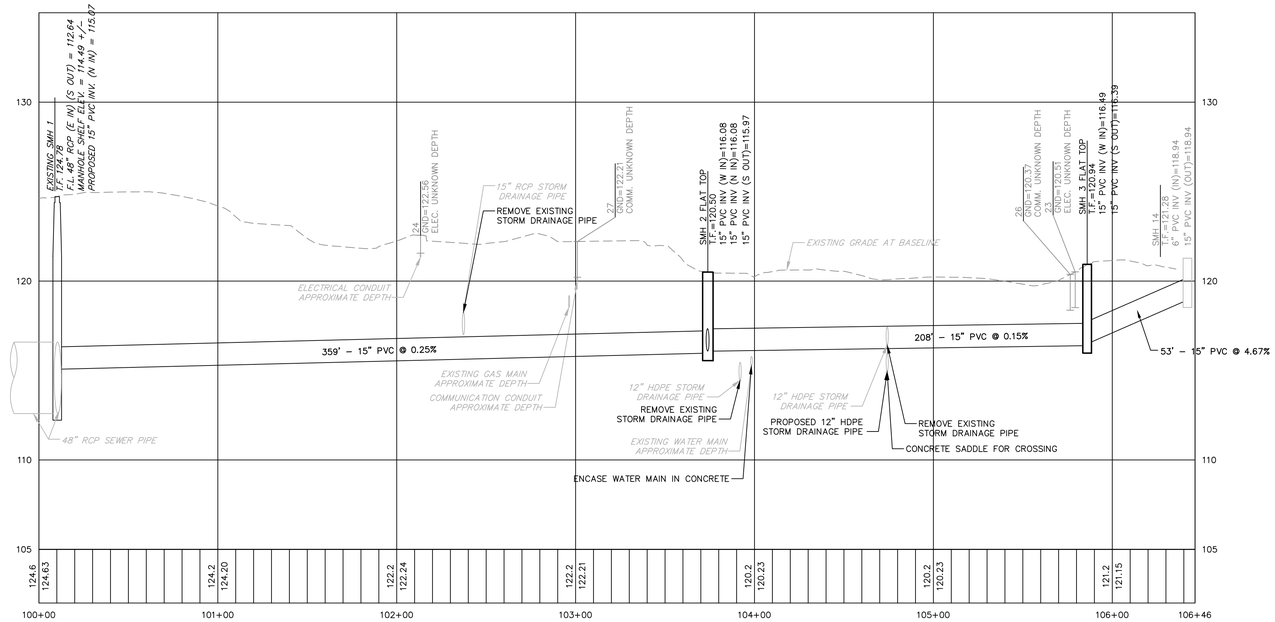

PROFILE STA 100+00 – 106+46
SCALE: H:1"=40'
V:1"=4'

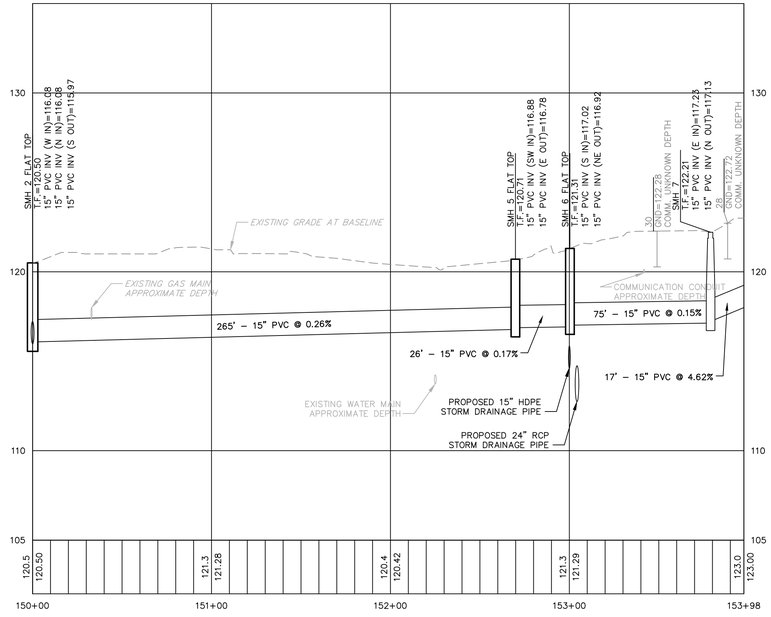

PROFILE STA 150+00 – 153+98
SCALE: H:1"=40'
V:1"=4'

NOTES:

1. CONTRACTOR SHALL VERIFY BUILDING OUTLET ELEVATIONS PRIOR TO CONSTRUCTION.
2. SEE SHEET CU–101 FOR PLAN VIEW OF SANITARY SEWER.

No.	DATE	DESCRIPTION	DESIGNER	REVIEWER
1.			WTD/DGB	KAM

STATE OF CONNECTICUT · DEAN E. AUDETTE · No. 17684 · LICENSED PROFESSIONAL ENGINEER

SEAL

SCALE:
HORZ.: 1" = 40'
VERT.: 1" = 4'
DATUM:
HORZ.: NAD 83
VERT.: NAVD 88
40 20 0 40
GRAPHIC SCALE

FUSS & O'NEILL
146 HARTFORD ROAD
MANCHESTER, CONNECTICUT 06040
860.646.2469
www.fando.com

CITY OF MERIDEN

UTILITY PLAN - SANITARY SEWER PROFILES

BRIDGE REPLACEMENTS AND UTILITY IMPROVEMENTS
BUTLER STREET AND HANOVER STREET
MERIDEN CONNECTICUT

PROJ. No.: 20170932.C38
DATE: FEBRUARY 27, 2024

CU-201

File Path: J:\DWG\P20170932\C11\Civil\Plan\20170932C11_UTL-01.dwg Layout: CU-201 PH1 (PRO) Plotted: Tue, February 27, 2024 - 4:53 PM User: shuffman
Plotter: AUTOCAD PDF (GENERAL DOCUMENTATION).PC3 CTB File: FO.STB
MS VIEW:
LAYER STATE:

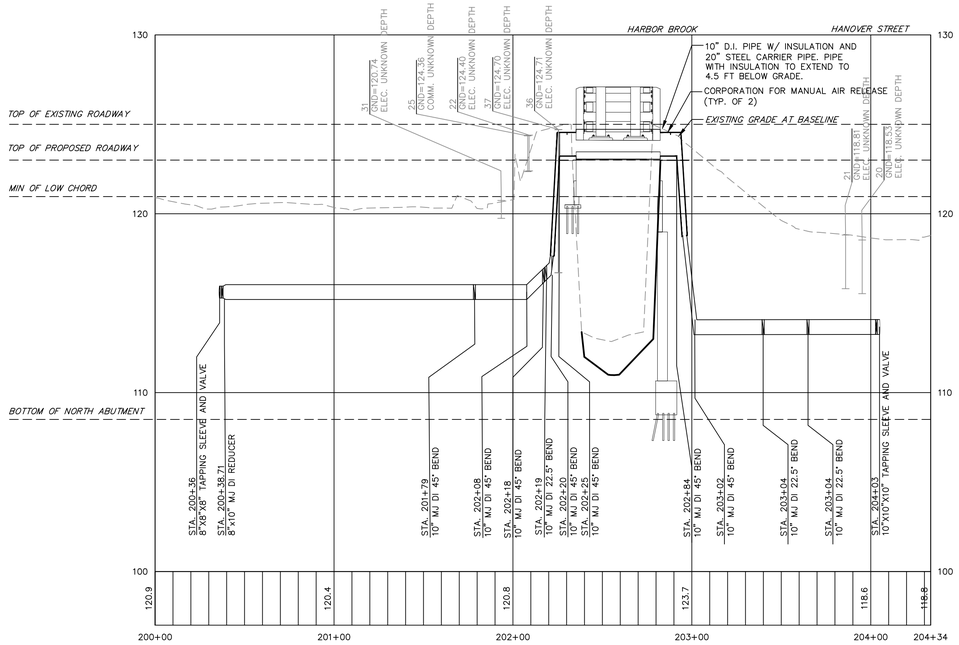

PROFILE STA 200+00 – 204+34
SCALE: H:1"=40'
V:1"=4'

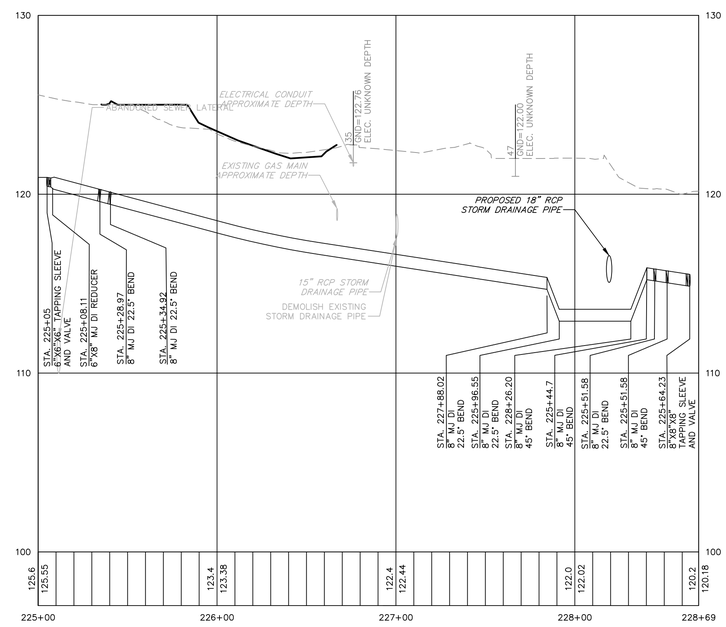

PROFILE STA 225+00 – 228+69
SCALE: H:1"=40'
V:1"=4'

File Path: J:\DWG\P2017\0932\C11\Civil\Plan\20170932C11_UTL-01.dwg Layout: CU-211 PH1 (PRO) Plotted: Tue, February 27, 2024 - 4:53 PM User: shuffman
MS VIEW: LAYER STATE: Plotter: AUTOCAD PDF (GENERAL DOCUMENTATION).PC3 CTB File: FO.STB

No.	DATE	DESCRIPTION	DESIGNER	REVIEWER
1.			DC/KMF	KAM

STATE OF CONNECTICUT DEAN E. AUDET No. 17623 LICENSED PROFESSIONAL ENGINEER

SEAL

SCALE:
HORZ.: 1" = 40'
VERT.:
DATUM:
HORZ.: NAD 83
VERT.: NAVD 88
40 20 0 40
GRAPHIC SCALE

FUSS & O'NEILL
146 HARTFORD ROAD
MANCHESTER, CONNECTICUT 06040
860.646.2469
www.fando.com

CITY OF MERIDEN

UTILITY PLAN - WATER PROFILES

BRIDGE REPLACEMENTS AND UTILITY IMPROVEMENTS
BUTLER STREET AND HANOVER STREET
MERIDEN CONNECTICUT

PROJ. No.: 20170932.C38
DATE: FEBRUARY 27, 2024

CU-211

File: J:\DWG\P2017\0932\C11\Civil\Plan\20170932C11_MPT01.dwg Layout: MPT-100 Plotted: 2024-02-27 4:53 PM Saved: 2024-02-27 4:15 PM User: SHuffman
MS VIEW: LAYER STATE: PC3: AUTOCAD PDF (GENERAL DOCUMENTATION).PC3 STB/CTB: FO.STB

No.	DATE	DESCRIPTION	DESIGNER	REVIEWER

SEAL

SEAL

STATE OF CONNECTICUT KRISTEN E. SOLOWAY No. 22072 LICENSED PROFESSIONAL ENGINEER

SCALE:
HORZ.: 1" = 60'
VERT.:
DATUM:
HORZ.: NAD 83
VERT.: NAD 83
60 30 0 60
GRAPHIC SCALE

FUSS & O'NEILL
146 HARTFORD ROAD
MANCHESTER, CONNECTICUT 06040
860.646.2469
www.fando.com

CITY OF MERIDEN

MAINTENANCE AND PROTECTION OF TRAFFIC-INDEX PLAN

BRIDGE REPLACEMENTS AND UTILITY IMPROVEMENTS
BUTLER STREET AND HANOVER STREET

MERIDEN CONNECTICUT

PROJ. No.: 20170932.C38
DATE: FEBRUARY 27, 2024

MPT-100

SIGN LEGEND:

ID	NO.	DESCRIPTION
A	31-1906 48"X42"	ROAD WORK AHEAD FINES DOUBLED
B	80-9603 36"X36"	ROAD WORK AHEAD
C	80-9611 36"X18"	END ROAD WORK
D	31-0552 30"X30"	STOP
E	31-1119 30"X30"	DO NOT ENTER
F	80-9074 24"X18"	SIDEWALK CLOSED AHEAD CROSS HERE
G	80-9076 30"X30"	DETOUR

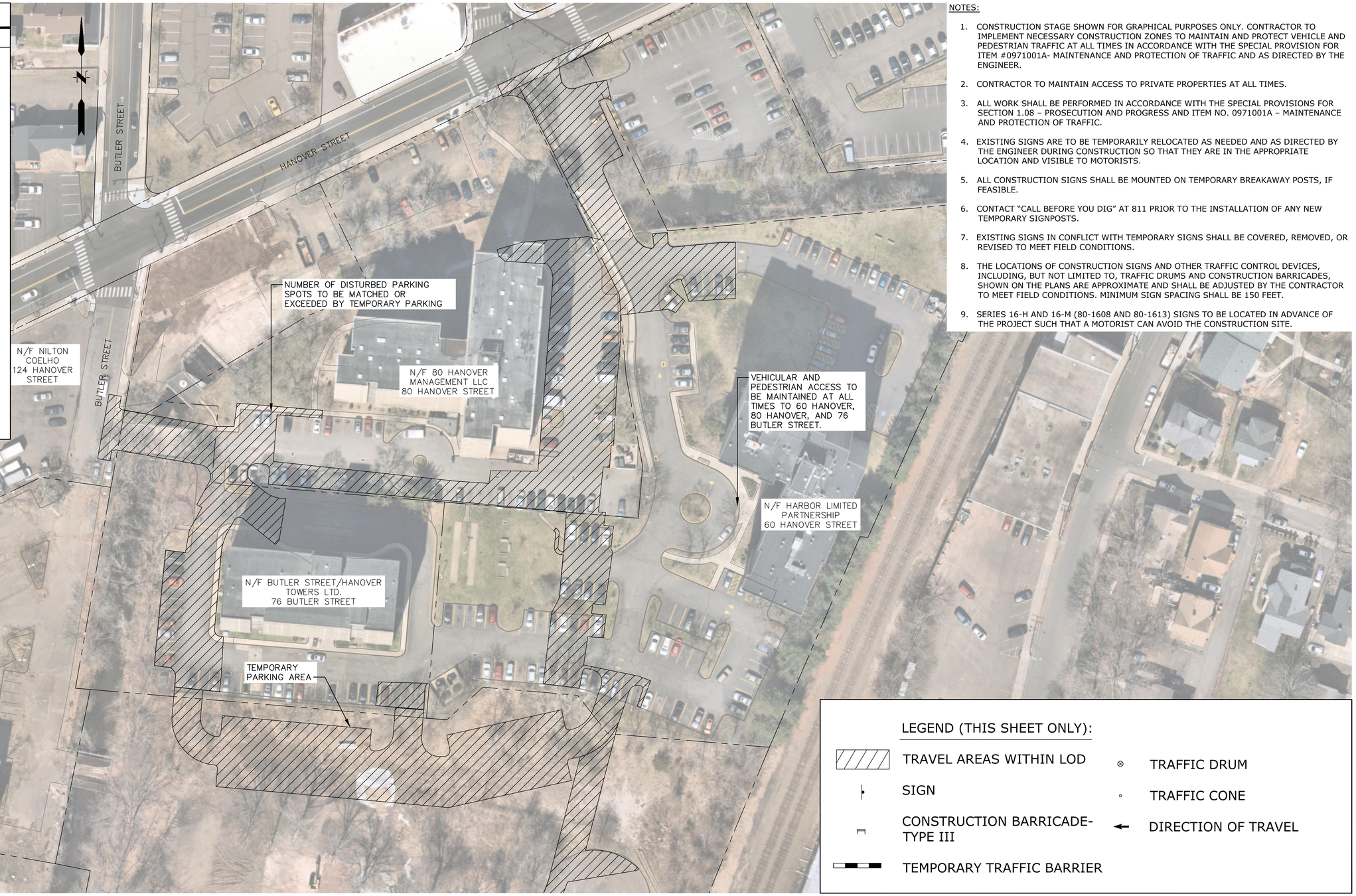

NOTES:

1. CONSTRUCTION STAGE SHOWN FOR GRAPHICAL PURPOSES ONLY. CONTRACTOR TO IMPLEMENT NECESSARY CONSTRUCTION ZONES TO MAINTAIN AND PROTECT VEHICLE AND PEDESTRIAN TRAFFIC AT ALL TIMES IN ACCORDANCE WITH THE SPECIAL PROVISION FOR ITEM #0971001A- MAINTENANCE AND PROTECTION OF TRAFFIC AND AS DIRECTED BY THE ENGINEER.
2. CONTRACTOR TO MAINTAIN ACCESS TO PRIVATE PROPERTIES AT ALL TIMES.
3. ALL WORK SHALL BE PERFORMED IN ACCORDANCE WITH THE SPECIAL PROVISIONS FOR SECTION 1.08 – PROSECUTION AND PROGRESS AND ITEM NO. 0971001A – MAINTENANCE AND PROTECTION OF TRAFFIC.
4. EXISTING SIGNS ARE TO BE TEMPORARILY RELOCATED AS NEEDED AND AS DIRECTED BY THE ENGINEER DURING CONSTRUCTION SO THAT THEY ARE IN THE APPROPRIATE LOCATION AND VISIBLE TO MOTORISTS.
5. ALL CONSTRUCTION SIGNS SHALL BE MOUNTED ON TEMPORARY BREAKAWAY POSTS, IF FEASIBLE.
6. CONTACT "CALL BEFORE YOU DIG" AT 811 PRIOR TO THE INSTALLATION OF ANY NEW TEMPORARY SIGNPOSTS.
7. EXISTING SIGNS IN CONFLICT WITH TEMPORARY SIGNS SHALL BE COVERED, REMOVED, OR REVISED TO MEET FIELD CONDITIONS.
8. THE LOCATIONS OF CONSTRUCTION SIGNS AND OTHER TRAFFIC CONTROL DEVICES, INCLUDING, BUT NOT LIMITED TO, TRAFFIC DRUMS AND CONSTRUCTION BARRICADES, SHOWN ON THE PLANS ARE APPROXIMATE AND SHALL BE ADJUSTED BY THE CONTRACTOR TO MEET FIELD CONDITIONS. MINIMUM SIGN SPACING SHALL BE 150 FEET.
9. SERIES 16-H AND 16-M (80-1608 AND 80-1613) SIGNS TO BE LOCATED IN ADVANCE OF THE PROJECT SUCH THAT A MOTORIST CAN AVOID THE CONSTRUCTION SITE.

LEGEND (THIS SHEET ONLY):

- TRAVEL AREAS WITHIN LOD
- SIGN
- CONSTRUCTION BARRICADE-TYPE III
- TEMPORARY TRAFFIC BARRIER
- TRAFFIC DRUM
- TRAFFIC CONE
- DIRECTION OF TRAVEL

No.	DATE	DESCRIPTION	DESIGNER	REVIEWER

SEAL

SEAL

STATE OF CONNECTICUT KRISTOPHER E. SOLOMON No. 22072 LICENSED PROFESSIONAL ENGINEER

SCALE:
HORZ.: 1" = 40'
VERT.:
DATUM:
HORZ.: NAD 83
VERT.: NAD 83
40 20 0 40
GRAPHIC SCALE

FUSS & O'NEILL
146 HARTFORD ROAD
MANCHESTER, CONNECTICUT 06040
860.646.2469
www.fando.com

CITY OF MERIDEN

MAINTENANCE AND PROTECTION OF TRAFFIC-SITE PLAN

BRIDGE REPLACEMENTS AND UTILITY IMPROVEMENTS
BUTLER STREET AND HANOVER STREET

MERIDEN CONNECTICUT

PROJ. No.: 20170932.C38
DATE: FEBRUARY 27, 2024

MPT-101

File: J:\DWG\P2017\0932\C11\Civil\Plan\20170932C11_MPT01.dwg Layout: MPT-101 Plotted: 2024-02-27 4:53 PM Saved: 2024-02-27 4:15 PM User: SHuffman
PC3: AUTOCAD PDF (GENERAL DOCUMENTATION).PC3 STB/CTB: FO.STB
LAYER STATE:
MS VIEW:

SIGN LEGEND:

ID	NO.	DESCRIPTION
A	31-1906 48"X42"	ROAD WORK AHEAD FINES DOUBLED
B	80-9603 36"X36"	ROAD WORK AHEAD
C	80-9611 36"X18"	END ROAD WORK
D	31-0552 30"X30"	STOP
E	31-1119 30"X30"	DO NOT ENTER
F	80-9074 24"X18"	SIDEWALK CLOSED AHEAD CROSS HERE
G	80-9076 30"X30"	DETOUR

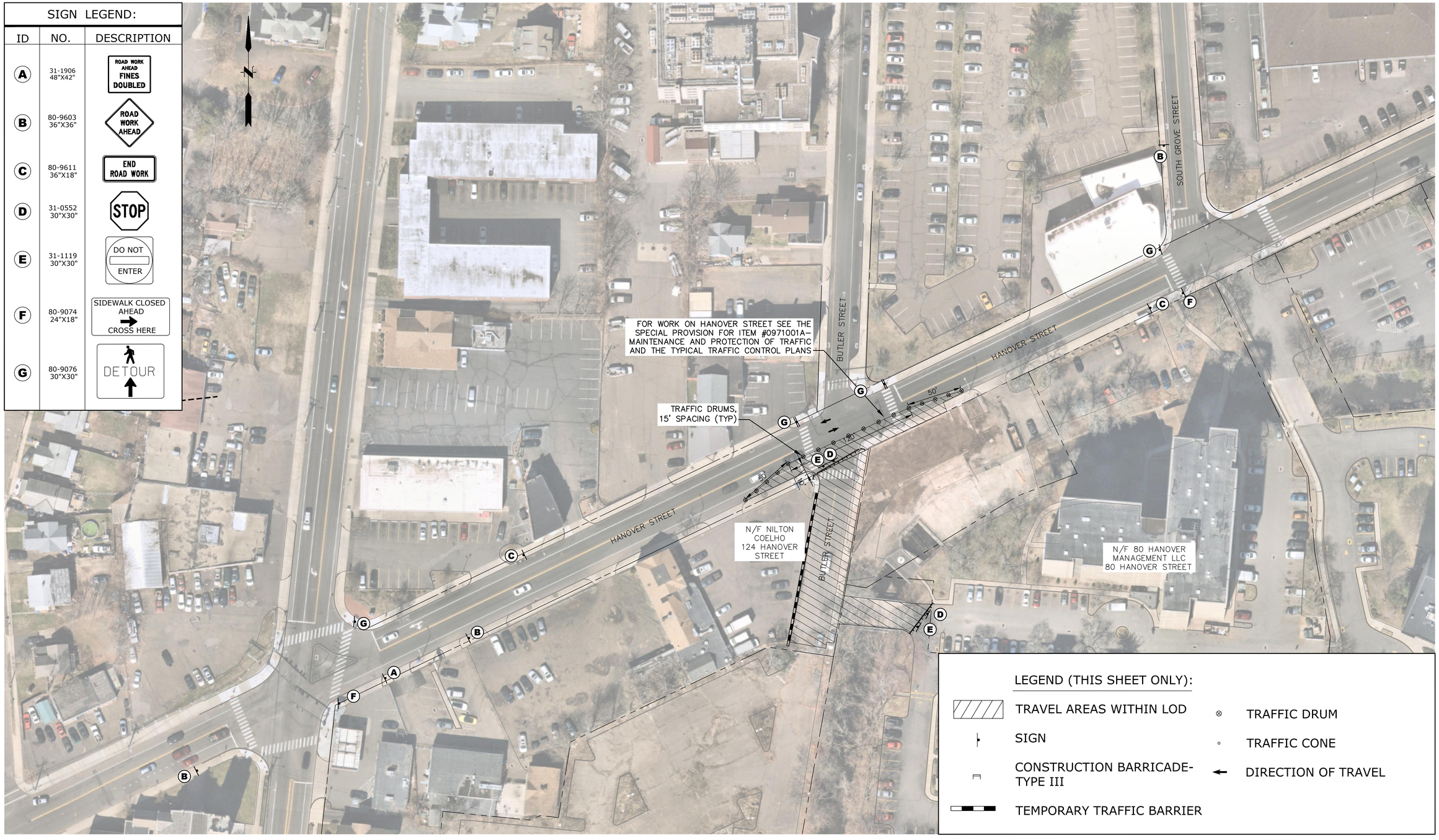

LEGEND (THIS SHEET ONLY):

- TRAVEL AREAS WITHIN LOD
- SIGN
- CONSTRUCTION BARRICADE-TYPE III
- TEMPORARY TRAFFIC BARRIER
- TRAFFIC DRUM
- TRAFFIC CONE
- DIRECTION OF TRAVEL

No.	DATE	DESCRIPTION	DESIGNER	REVIEWER

SEAL

SEAL

STATE OF CONNECTICUT KRISTIN E. SOLOMON No. 22072 LICENSED PROFESSIONAL ENGINEER

SCALE:
HORZ.: 1" = 40'
VERT.:
DATUM:
HORZ.: NAD 83
VERT.: NAD 83
40 20 0 40
GRAPHIC SCALE

FUSS & O'NEILL
146 HARTFORD ROAD
MANCHESTER, CONNECTICUT 06040
860.646.2469
www.fando.com

CITY OF MERIDEN

MAINTENANCE AND PROTECTION OF TRAFFIC-BUTLER CLOSURE

BRIDGE REPLACEMENTS AND UTILITY IMPROVEMENTS
BUTLER STREET AND HANOVER STREET

MERIDEN CONNECTICUT

PROJ. No.: 20170932.C38
DATE: FEBRUARY 27, 2024

MPT-102

File: J:\DWG\P2017\0932\C11\Civil\Plan\20170932C11_MPT01.dwg Layout: MPT-102 Plotted: 2024-02-27 4:53 PM Saved: 2024-02-27 4:15 PM User: SHuffman
PC3: AUTOCAD PDF (GENERAL DOCUMENTATION).PC3 STB/CTB: FO.STB
LAYER STATE:
MS VIEW:

SIGN LEGEND:

ID	NO.	DESCRIPTION
A	31-1906 48"X42"	ROAD WORK AHEAD FINES DOUBLED
B	80-9603 36"X36"	ROAD WORK AHEAD
C	80-9611 36"X18"	END ROAD WORK
D	31-0552 30"X30"	STOP
E	31-1119 30"X30"	DO NOT ENTER
F	80-9074 24"X18"	SIDEWALK CLOSED AHEAD CROSS HERE
G	80-9076 30"X30"	DETOUR

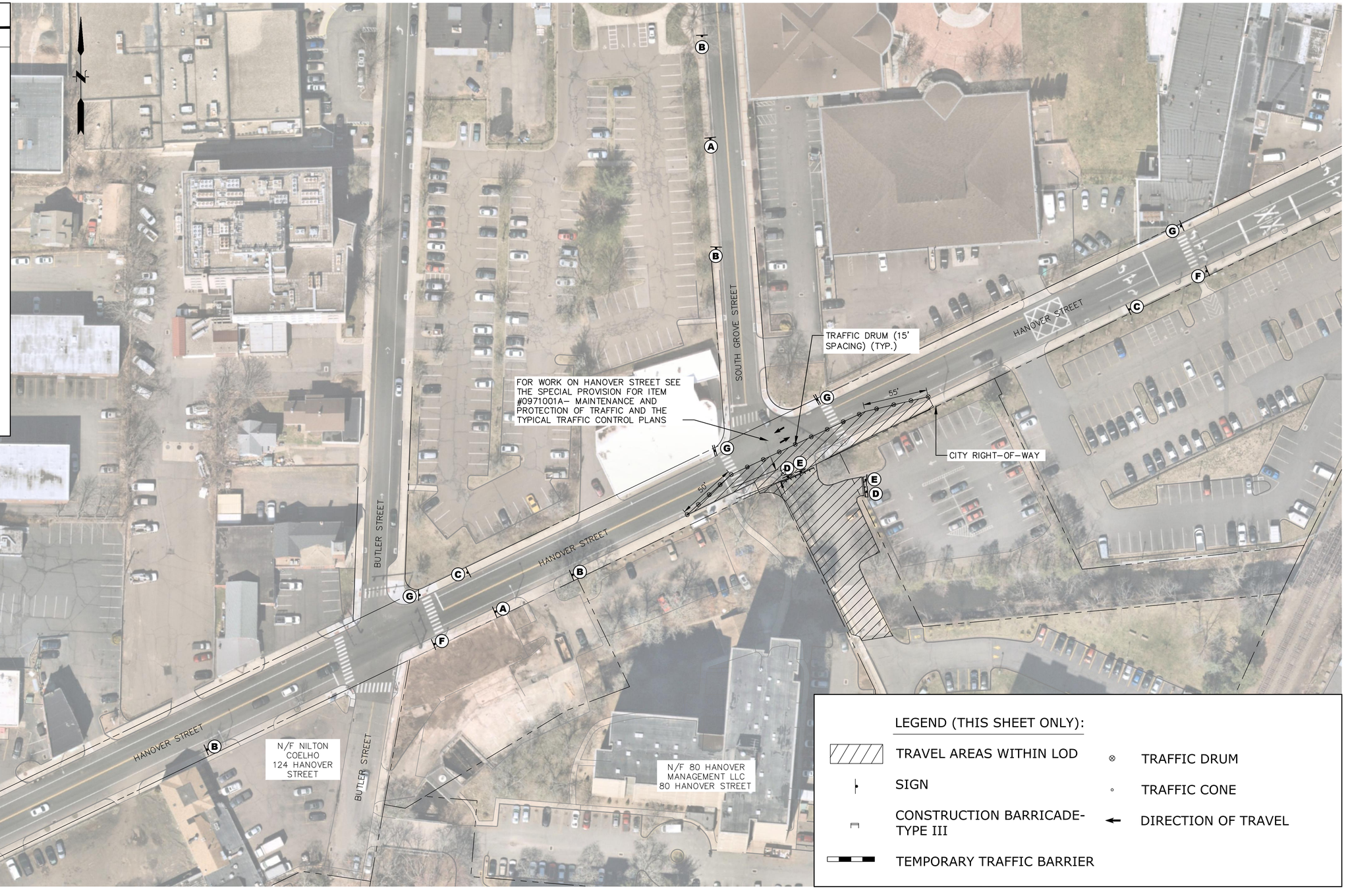

LEGEND (THIS SHEET ONLY):

- TRAVEL AREAS WITHIN LOD
- SIGN
- CONSTRUCTION BARRICADE-TYPE III
- TEMPORARY TRAFFIC BARRIER
- TRAFFIC DRUM
- TRAFFIC CONE
- DIRECTION OF TRAVEL

No.	DATE	DESCRIPTION	DESIGNER	REVIEWER

SEAL

SEAL

STATE OF CONNECTICUT KRISTIN E. SOUTHWICK No. 22072 LICENSED PROFESSIONAL ENGINEER

SCALE:
HORZ.: 1" = 40'
VERT.:
DATUM:
HORZ.: NAD 83
VERT.: NAD 83
40 20 0 40
GRAPHIC SCALE

FUSS & O'NEILL
146 HARTFORD ROAD
MANCHESTER, CONNECTICUT 06040
860.646.2469
www.fando.com

CITY OF MERIDEN

MAINTENANCE AND PROTECTION OF TRAFFIC-HANOVER CLOSURE

BRIDGE REPLACEMENTS AND UTILITY IMPROVEMENTS
BUTLER STREET AND HANOVER STREET

MERIDEN CONNECTICUT

PROJ. No.: 20170932.C38
DATE: FEBRUARY 27, 2024

MPT-103

File: J:\DWG\P2017\0932\C11\Civil\Plan\20170932C11_MPT01.dwg Layout: MPT-103 Plotted: 2024-02-27 4:53 PM Saved: 2024-02-27 4:15 PM User: SHuffman
PC3: AUTOCAD PDF (GENERAL DOCUMENTATION).PC3 STB/CTB: FO.STB
LAYER STATE:
MS VIEW:

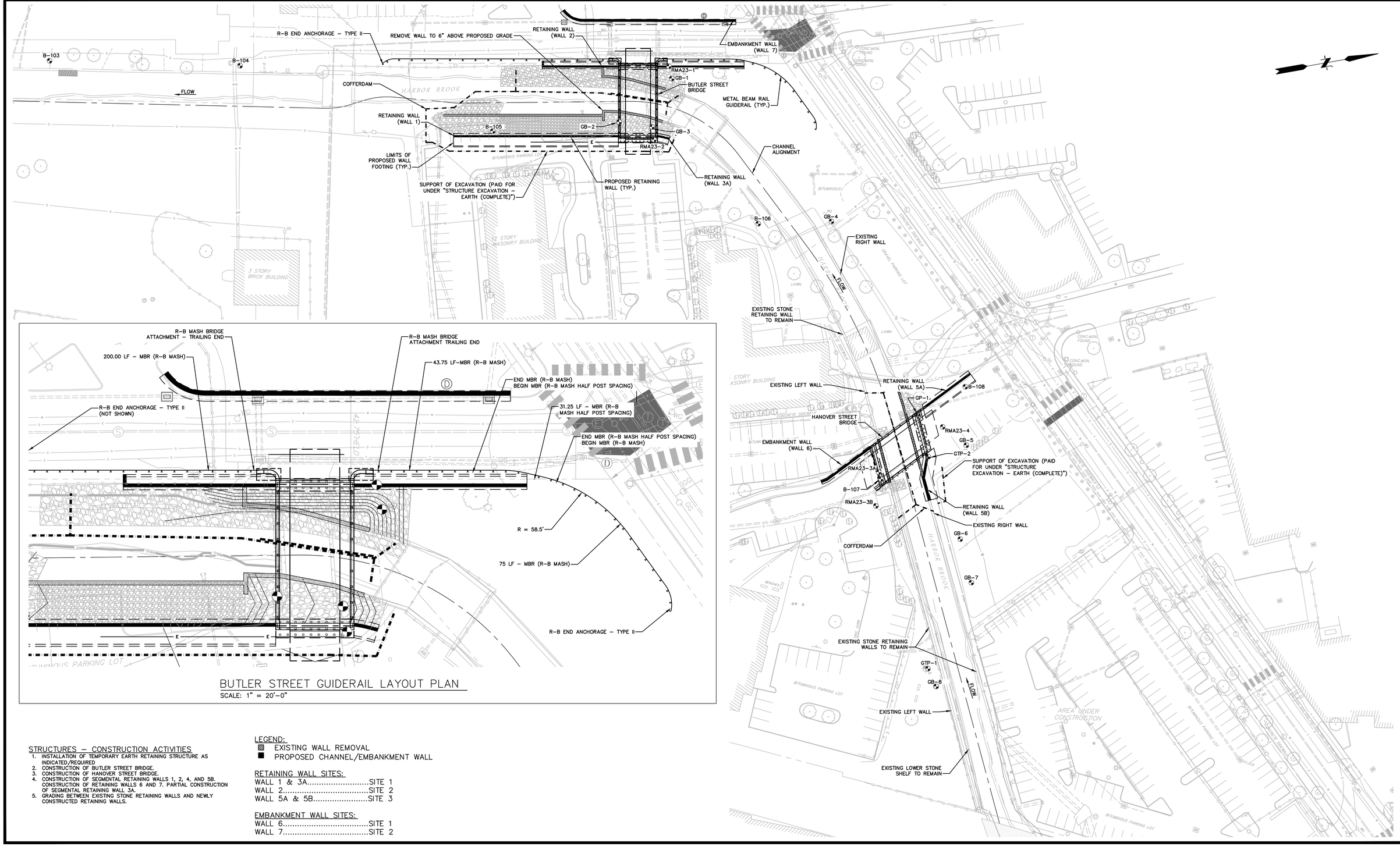

BUTLER STREET GUIDERAIL LAYOUT PLAN

SCALE: 1" = 20'-0"

STRUCTURES – CONSTRUCTION ACTIVITIES

1. INSTALLATION OF TEMPORARY EARTH RETAINING STRUCTURE AS INDICATED/REQUIRED
2. CONSTRUCTION OF BUTLER STREET BRIDGE.
3. CONSTRUCTION OF HANOVER STREET BRIDGE.
4. CONSTRUCTION OF SEGMENTAL RETAINING WALLS 1, 2, 4, AND 5B. CONSTRUCTION OF RETAINING WALLS 6 AND 7. PARTIAL CONSTRUCTION OF SEGMENTAL RETAINING WALL 3A.
5. GRADING BETWEEN EXISTING STONE RETAINING WALLS AND NEWLY CONSTRUCTED RETAINING WALLS.

LEGEND:

- EXISTING WALL REMOVAL
- PROPOSED CHANNEL/EMBANKMENT WALL

RETAINING WALL SITES:

WALL 1 & 3A.....SITE 1
WALL 2.....SITE 2
WALL 5A & 5B.....SITE 3

EMBANKMENT WALL SITES:

WALL 6.....SITE 1
WALL 7.....SITE 2

No.	DATE	DESCRIPTION	DESIGNER	REVIEWER

SEAL

SEAL

STATE OF CONNECTICUT KRISTEN E. SOLOWAY No. 22072 LICENSED PROFESSIONAL ENGINEER

SCALE:
HORZ.: 1" = 40'
VERT.: 1" = 40'
DATUM:
HORZ.: NAD 83
VERT.: NAVD 88
40 20 0 40
GRAPHIC SCALE

FUSS & O'NEILL
146 HARTFORD ROAD
MANCHESTER, CONNECTICUT 06040
860.646.2469
www.fando.com

CITY OF MERIDEN

STRUCTURE LOCATION PLAN
PHASE 1

BRIDGE REPLACEMENTS AND UTILITY IMPROVEMENTS
BUTLER STREET AND HANOVER STREET

MERIDEN CONNECTICUT

PROJ. No.: 20170932C11
DATE: FEBRUARY 27, 2024

SA-101

File Path: J:\DWG\P2017\0932\C11\Structural\Plan\20170932C11_01_LOCATION PLAN.dwg Layout: SA-101-PH1 Plotted: Wed, February 28, 2024 - 11:49 AM User: astripsky
Plotter: AUTOCAD PDF (GENERAL DOCUMENTATION).PC3 CTB File: FO.STB
MS VIEW:
LAYER STATE:

SOIL BORING LOG

FUSS & O'NEILL

BORING NO.: **GB-1**
Page 1 of 1

Project:	Harbor Brook Channel Improvements and Linear Trail	**Project No.:**	20170932.C10
Location:	Meriden, Connecticut	**Project Mgr:**	James Otis
Client:	City of Meriden	**Field Eng. Staff:**	H. Humphrey
Drilling Co.:	General Borings Inc.	**Date Started:**	May 11, 2020
Driller:	J. Casson	**Date Finished:**	May 11, 2020

Elevation: 120 ft. | **Vertical Datum:** NAVD 1988 | **Boring Location:** See Figure 1 | **Coord.:** Not Surveyed | **Horizontal Datum:**

Item	Casing	Sampler	Core Barrel
Type	HSA	SS	-
Length (ft)	5	2	-
Inside Dia. (in.)	3.25	1.375	-
Hammer Wt. (lb.)	-	140	-
Hammer Fall (in.)	-	30	-

Rig Make & Model: Diedrich D-50
☐ Truck ☐ Tripod ☐ Cat-Head
☐ Rubber Tire ☐ Geoprobe ☐ Winch
☑ Track ☐ Air Track ☐ Roller Bit
☐ Skid ☐ ☑ Cutting Head

Hammer Type: ☐ Safety ☐ Doughnut ☑ Automatic ☐

Drilling Fluid: ☐ Bentonite ☐ Polymer ☐ Water ☑ None

Drill Rod Size:

Casing Advance: Hollow Stem Augers

Depth/ Elev. (ft)	Sample No. / Interval (ft)	Rec / Pen. (in)	Sample Blows per 6"	Stratum Graphic	USCS Symbol Group	Visual - Manual Identification & Description* (density/consistency, color, Group Name & Symbol, maximum particle size, structure, odor, moisture, optional descriptions, geologic interpretation)	Field Tests: Dilatancy / Toughness / Plasticity / Dry Strength	Remarks
120						0.3 **ASPHALT**		
	SS-1 1.0'- 3.0'	24/24	5 5 3 3			Black to brown, fine to coarse SAND, some Gravel, little Silt, trace Brick, trace Roots, dry **(FILL)**	- - - -	
	SS-2 3.0'- 5.0'	14/24	4 3 6 7			SAA	- - - -	
5						5.0		
	SS-3 5.0'- 7.0'	11/24	3 3 4 6			Reddish brown, fine to coarse SAND, some Gravel, little Silt, dry **(FILL)**	- - - -	
	SS-4 7.0'- 9.0'	10/24	3 4 6 8			Reddish brown, fine to coarse SAND, some Gravel, little Clay, wet **(FILL)**	- - - -	GW @ 9' bgs
						10.0		
10 110	SS-5 10.0'- 12.0'	24/24	1 1 1 1		SP-SM	Very loose, brown, fine to coarse SAND, little Gravel, little Silt, moderately organic, wet	- - - -	
	SS-6 12.0'- 14.0'	24/24	3 5 4 7		SP-SM	13.0 Top 12" - SAA, except slightly organic	- - - -	
					ML	Bottom 12" - Brown SILT, some Clay, little fine sand, wet		
15	SS-7 15.0'- 17.0'	20/24	6 7 6 4		ML	Medium dense, brown SILT, some fine Sand, little Clay, wet	- - - -	
20 100	SS-8 20.0'- 22.0'	24/24	3 4 6 6		ML	Loose to medium dense, brown SILT, some fine Sand, little Clay, wet	- - - -	
						22.0 EOB at 22 feet		

Water Level Data				
Date	Time	Elapsed Time (hr)	Depth in feet: Bottom of Hole	Depth in feet: Water
3/19/19	0:00	-	5.0	5

Minor Constituent Proportions	
And	35 - 50%
Some	20 - 35%
Little	10 - 20%
Trace	<10%

Soil Density	
Very Loose	0 - 4
Loose	4 - 10
Medium Dense	10 - 30
Dense	30 - 50
Very Dense	>50

Soil Consistency	
Very Soft	0 - 2
Soft	2 - 4
Medium Stiff	4 - 8
Stiff	8 - 15
Very Stiff	15 - 30
Hard	>30

Sample Type	
SS	Split Spoon
ST	Shelby Tube
GS	Grab Sample
ET	Extruded Tube
C	Rock Core

Notes:

Boring No.: **GB-1**

Field Test Legend: Dilatancy: N - None S - Slow R - Rapid; Toughness: L - Low M - Medium H - High; Plasticity: NP - Non-Plastic L - Low M - Medium H - High; Dry Strength: N - None L - Low M - Medium H - High VH - Very High

NOTES: Soil identifications and field tests based on visual-manual methods per ASTM D2488 and using the modified Burmister System

SOIL BORING LOG

FUSS & O'NEILL

BORING NO.: **GB-2**
Page 1 of 1

Project:	Harbor Brook Channel Improvements and Linear Trail	**Project No.:**	20170932.C10
Location:	Meriden, Connecticut	**Project Mgr:**	James Otis
Client:	City of Meriden	**Field Eng. Staff:**	H. Humphrey
Drilling Co.:	General Borings Inc.	**Date Started:**	May 12, 2020
Driller:	J. Casson	**Date Finished:**	May 12, 2020

Elevation: 121 ft. | **Vertical Datum:** NAVD 1988 | **Boring Location:** See Figure 1 | **Coord.:** Not Surveyed | **Horizontal Datum:**

Item	Casing	Sampler	Core Barrel
Type	HSA	SS	-
Length (ft)	5	2	-
Inside Dia. (in.)	3.25	1.375	-
Hammer Wt. (lb.)	-	140	-
Hammer Fall (in.)	-	30	-

Rig Make & Model: Diedrich D-50
☐ Truck ☐ Tripod ☐ Cat-Head
☐ Rubber Tire ☐ Geoprobe ☐ Winch
☑ Track ☐ Air Track ☐ Roller Bit
☐ Skid ☐ ☑ Cutting Head

Hammer Type: ☐ Safety ☐ Doughnut ☑ Automatic ☐

Drilling Fluid: ☐ Bentonite ☐ Polymer ☐ Water ☑ None

Drill Rod Size:

Casing Advance: Hollow Stem Augers

Depth/ Elev. (ft)	Sample No. / Interval (ft)	Rec / Pen. (in)	Sample Blows per 6"	Stratum Graphic	USCS Symbol Group	Visual - Manual Identification & Description* (density/consistency, color, Group Name & Symbol, maximum particle size, structure, odor, moisture, optional descriptions, geologic interpretation)	Field Tests: Dilatancy / Toughness / Plasticity / Dry Strength	Remarks
						0.3 **ASPHALT**		
120	SS-1 1.0'- 3.0'	18/24	17 19 12 12			Reddish brown, fine to coarse SAND, some Gravel, little Silt, occasional Cobbles, dry **(FILL)**	- - - -	
	SS-2 3.0'- 5.0'	15/24	30 12 8 7			Black, fine to coarse SAND, some Gravel, little Silt, trace Coal, trace Brick, trace Slag, trace Roots, dry **(FILL)**	- - - -	
5	SS-3 5.0'- 7.0'	5/24	8 8 8 5			Reddish brown, fine to coarse SAND, some Gravel, little Silt, dry **(FILL)**	- - - -	
	SS-4 7.0'- 9.0'	0/24	14 18 10 11			No Recovery, cobble in tip of sampler	- - - -	
						10.0		
10 110	SS-5 10.0'- 12.0'	8/24	6 15 13 13		SP-SM	Medium dense, brown, fine to coarse SAND, little Gravel, little Silt, slightly organic, wet	- - - -	GW @ 10' bgs
	SS-6 12.0'- 14.0'	24/24	12 9 7 8		SP-SM	Top 18" - SAA	- - - -	
						13.5		
					ML	Bottom 6" - Brown SILT, little fine Sand, little Clay, wet		
15	SS-7 15.0'- 17.0'	19/24	4 6 8 8		ML	Medium dense, brown SILT, little fine Sand, little Clay, wet	- - - -	SS-7: ppd=1.0 tsf
20 100	SS-8 20.0'- 22.0'	23/24	5 6 10 8		ML	Medium dense, brown SILT, some fine Sand, little Clay, wet	- - - -	
						22.0 EOB at 22 feet		

Water Level Data				
Date	Time	Elapsed Time (hr)	Depth in feet: Bottom of Hole	Depth in feet: Water
4/5/19	0:00	0:00	5.0	3

Minor Constituent Proportions	
And	35 - 50%
Some	20 - 35%
Little	10 - 20%
Trace	<10%

Soil Density	
Very Loose	0 - 4
Loose	4 - 10
Medium Dense	10 - 30
Dense	30 - 50
Very Dense	>50

Soil Consistency	
Very Soft	0 - 2
Soft	2 - 4
Medium Stiff	4 - 8
Stiff	8 - 15
Very Stiff	15 - 30
Hard	>30

Sample Type	
SS	Split Spoon
ST	Shelby Tube
GS	Grab Sample
ET	Extruded Tube
C	Rock Core

Notes: ppd = pocket penetrometer in diametral direction

Boring No.: **GB-2**

Field Test Legend: Dilatancy: N - None S - Slow R - Rapid; Toughness: L - Low M - Medium H - High; Plasticity: NP - Non-Plastic L - Low M - Medium H - High; Dry Strength: N - None L - Low M - Medium H - High VH - Very High

NOTES: Soil identifications and field tests based on visual-manual methods per ASTM D2488 and using the modified Burmister System

No.	DATE	DESCRIPTION	DESIGNER	REVIEWER

SEAL

SEAL

STATE OF CONNECTICUT · ROBERT E. SOUCY · No. 22072 · LICENSED PROFESSIONAL ENGINEER

SCALE: HORZ.: VERT.:
DATUM: HORZ.: VERT.:
0
GRAPHIC SCALE

FUSS & O'NEILL
146 HARTFORD ROAD
MANCHESTER, CONNECTICUT 06040
860.646.2469
www.fando.com

CITY OF MERIDEN

BORING LOGS I

BRIDGE REPLACEMENTS AND UTILITY IMPROVEMENTS
BUTLER STREET AND HANOVER STREET
MERIDEN CONNECTICUT

PROJ. No.: 20170932.C11
DATE: FEBRUARY 27, 2024

SA-102

File Path: J:\DWG\P2017\0932\C11\Structural\Plan\20170932C11_01_LOCATION PLAN.dwg Layout: SA-102 Plotted: Wed, February 28, 2024 - 2:53 PM User: astripsky
PC3: AUTOCAD PDF (GENERAL DOCUMENTATION).PC3 STB/CTB: FO.STB
LAYER STATE:
MS VIEW:

SOIL BORING LOG

FUSS & O'NEILL

BORING NO.: **GB-3**
Page **1** of **2**

Project:	Harbor Brook Channel Improvements and Linear Trail	**Project No.:**	20170932.C10
Location:	Meriden, Connecticut	**Project Mgr:**	James Otis
Client:	City of Meriden	**Field Eng. Staff:**	H. Humphrey
Drilling Co.:	General Borings Inc.	**Date Started:**	May 12, 2020
Driller:	J. Casson	**Date Finished:**	May 12, 2020

Elevation: 121 ft. | **Vertical Datum:** NAVD 1988 | **Boring Location:** See Figure 1 | **Coord.:** Not Surveyed | **Horizontal Datum:**

Item	Casing	Sampler	Core Barrel
Type	HSA	SS	-
Length (ft)	5	2	-
Inside Dia. (in.)	3.25	1.375	-
Hammer Wt. (lb.)	-	140	-
Hammer Fall (in.)	-	30	-

Rig Make & Model: Diedrich D-50
☐ Truck ☐ Tripod ☐ Cat-Head
☐ Rubber Tire ☐ Geoprobe ☐ Winch
☑ Track ☐ Air Track ☐ Roller Bit
☐ Skid ☐ _____ ☑ Cutting Head

Hammer Type: ☐ Safety ☐ Doughnut ☑ Automatic ☐ _____

Drilling Fluid: ☐ Bentonite ☐ Polymer ☐ Water ☑ None

Drill Rod Size: / **Casing Advance**: Hollow Stem Augers

Depth/ Elev. (ft)	Sample No. / Interval (ft)	Rec / Pen. (in)	Sample Blows per 6"	Stratum Graphic	USCS Symbol Group	Visual - Manual Identification & Description* (density/consistency, color, Group Name & Symbol, maximum particle size, structure, odor, moisture, optional descriptions, geologic interpretation)	Field Tests: Dilatancy	Toughness	Plasticity	Dry Strength	Remarks
						0.3 **TOPSOIL**					
120	SS-1 1.0'- 3.0'	18/24	2 7 9 17			Black to brown, fine to medium SAND, some Gravel, little Silt, trace roots, dry **(FILL)**	-	-	-	-	
	SS-2 3.0'- 5.0'	22/24	11 14 42 12			Black to brown, fine to medium SAND, some Gravel, little Silt, trace Asphalt, trace Slag, dry **(FILL)**	-	-	-	-	
5	SS-3 5.0'- 7.0'	14/24	6 7 5 4			Brown, fine to medium SAND, some Gravel, little Silt, trace Asphalt, trace Brick, dry **(FILL)**	-	-	-	-	
	SS-4 7.0'- 9.0'	12/24	4 5 5 6			SAA	-	-	-	-	
						10.0					
10 110	SS-5 10.0'- 12.0'	12/24	9 6 4 7		SP-SM	Medium dense, fine to medium SAND, little Gravel, little Clay, wet	-	-	-	-	GW @ 10' bgs
	SS-6 12.0'- 14.0'	24/24	4 6 10 10		SP-SM	12.5 Top 6" - SAA	-	-	-	-	
					CL	Bottom 18" - Brown CLAY, some Silt, trace fine Sand, wet					
15	SS-7 15.0'- 17.0'	18/24	5 7 9 11		CL	Very stiff, brown CLAY, some Silt, trace fine Sand, wet	-	-	-	-	SS-7: ppd=1.5 tsf
20 100	SS-8 20.0'- 22.0'	22/24	3 4 6 6		CL	Stiff, brown CLAY, some fine Sand, wet	-	-	-	-	SS-8: ppd=1.25 tsf

Water Level Data

Date	Time	Elapsed Time (hr)	Depth in feet: Bottom of Hole	Water

Minor Constituent Proportions

And	35 - 50%
Some	20 - 35%
Little	10 - 20%
Trace	<10%

Soil Density

Very Loose	0 - 4
Loose	4 - 10
Medium Dense	10 - 30
Dense	30 - 50
Very Dense	>50

Soil Consistency

Very Soft	0 - 2
Soft	2 - 4
Medium Stiff	4 - 8
Stiff	8 - 15
Very Stiff	15 - 30
Hard	>30

Sample Type

SS	Split Spoon
ST	Shelby Tube
GS	Grab Sample
ET	Extruded Tube
C	Rock Core

Notes: ppd = pocket penetrometer in diametral direction

Boring No.: **GB-3**

Field Test Legend: Dilatancy: N - None S - Slow R - Rapid; Plasticity: NP - Non-Plastic L - Low M - Medium H - High; Toughness: L - Low M - Medium H - High; Dry Strength: N - None L - Low M - Medium H - High VH - Very High

NOTES: Soil identifications and field tests based on visual-manual methods per ASTM D2488 and using the modified Burmister System

SOIL BORING LOG
(continued)

FUSS & O'NEILL

BORING NO.: **GB-3**
Page **2** of **2**

Depth/ Elev. (ft)	Sample No. / Interval (ft)	Rec / Pen. (in)	Sample Blows per 6"	Stratum Graphic	USCS Symbol Group	Visual - Manual Identification & Description* (density/consistency, color, Group Name & Symbol, maximum particle size, structure, odor, moisture, optional descriptions, geologic interpretation)	Field Tests: Dilatancy	Toughness	Plasticity	Dry Strength	Remarks*
	SS-9 25.0'- 27.0'	24/24	3 3 4 6			SAA, except medium stiff	-	-	-	-	SS-9: ppd=1.5 tsf
	ST-1 28.0'- 30.0'	24/24	P U S H				-	-	-	-	undisturbed sample taken
30 90	SS-10 30.0'- 32.0'	24/24	3 6 6 7		CL	Stiff, brown CLAY, trace fine Sand, wet	-	-	-	-	SS-10: ppd=1.0 tsf
35						39.0					
40 80	SS-11 40.0'- 42.0'	9/24	3 4 6 10		SM	Loose to medium dense, reddish brown, fine to medium SAND, some Gravel, little Clay, moist	-	-	-	-	
45											
50 70	SS-12 50.0'- 52.0'	18/24	16 27 49 55		SM	Very dense, reddish brown, fine to medium SAND, some Gravel, little Silt, occasional Cobbles, moist	-	-	-	-	
						52.0 EOB at 52 feet					
55											

NOTES:

PROJECT NO.: **20170932.C10** | BORING NO.: **GB-3**

NOTES: Soil identifications and field tests based on visual-manual methods per ASTM D2488 and using the modified Burmister System

No.	DATE	DESCRIPTION	DESIGNER	REVIEWER

SEAL

SEAL

STATE OF CONNECTICUT · KRISTEN E. SOLOMONT · No. 22072 · LICENSED PROFESSIONAL ENGINEER

SCALE: HORZ.: VERT.:
DATUM: HORZ.: VERT.:
0
GRAPHIC SCALE

FUSS & O'NEILL
146 HARTFORD ROAD
MANCHESTER, CONNECTICUT 06040
860.646.2469
www.fando.com

CITY OF MERIDEN

BORING LOGS II

BRIDGE REPLACEMENTS AND UTILITY IMPROVEMENTS
BUTLER STREET AND HANOVER STREET
MERIDEN CONNECTICUT

PROJ. No.: 20170932.C11
DATE: FEBRUARY 27, 2024

SA-103

File Path: J:\DWG\P2017\0932\C11\Structural\Plan\20170932C11_01_LOCATION PLAN.dwg Layout: SA-103 Plotted: Wed, February 28, 2024 - 2:53 PM User: astrpsky
PC3: AUTOCAD PDF (GENERAL DOCUMENTATION).PC3 STB/CTB: FO.STB
LAYER STATE:
MS VIEW:

SOIL BORING LOG

FUSS & O'NEILL

BORING NO.: **GB-4**
Page 1 of 1

Project:	Harbor Brook Channel Improvements and Linear Trail	**Project No.:**	20170932.C10
Location:	Meriden, Connecticut	**Project Mgr:**	James Otis
Client:	City of Meriden	**Field Eng. Staff:**	H. Humphrey
Drilling Co.:	General Borings Inc.	**Date Started:**	May 11, 2020
Driller:	J. Casson	**Date Finished:**	May 11, 2020

Elevation: 120 ft. | **Vertical Datum:** NAVD 1988 | **Boring Location:** See Figure 1 | **Coord.:** Not Surveyed | **Horizontal Datum:**

Item	Casing	Sampler	Core Barrel
Type	HSA	SS	-
Length (ft)	5	2	-
Inside Dia. (in.)	3.25	1.375	-
Hammer Wt. (lb.)	-	140	-
Hammer Fall (in.)	-	30	-

Rig Make & Model: Diedrich D-50
☐ Truck ☐ Tripod ☐ Cat-Head
☐ Rubber Tire ☐ Geoprobe ☐ Winch
☑ Track ☐ Air Track ☐ Roller Bit
☐ Skid ☐ ☑ Cutting Head

Hammer Type: ☐ Safety ☐ Doughnut ☑ Automatic ☐

Drilling Fluid: ☐ Bentonite ☐ Polymer ☐ Water ☑ None

Drill Rod Size:

Casing Advance: Hollow Stem Augers

Depth/ Elev. (ft)	Sample No. / Interval (ft)	Rec / Pen. (in)	Sample Blows per 6"	Stratum Graphic	USCS Symbol Group	Visual - Manual Identification & Description* (density/consistency, color, Group Name & Symbol, maximum particle size, structure, odor, moisture, optional descriptions, geologic interpretation)	Dilatancy	Toughness	Plasticity	Dry Strength	Remarks
120						0.3 **ASPHALT**					
	SS-1 1.0'- 3.0'	24/24	8 7 7 9			Reddish brown, fine to medium SAND, some Silt, little Gravel, trace Asphalt, dry **(FILL)**	-	-	-	-	
	SS-2 3.0'- 5.0'	14/24	8 7 4 4			SAA	-	-	-	-	
5	SS-3 5.0'- 7.0'	9/24	6 5 4 4			Brown, fine to medium SAND, some Silt, moist **(FILL)**	-	-	-	-	
	SS-4 7.0'- 9.0'	12/24	5 3 4 9			Reddish brown, fine to medium SAND, some Gravel, little Clay, wet **(FILL)**	-	-	-	-	GW @ 7' bgs
110						10.0					
10	SS-5 10.0'- 12.0'	16/24	4 5 5 4		SC	Loose to medium dense, fine SAND, some Clay, wet	-	-	-	-	
						13.0					
15	SS-6 15.0'- 17.0'	21/24	2 4 4 8		CL	Medium stiff to stiff, brown CLAY, trace fine Sand, wet	-	-	-	-	SS-6: ppd=1.5 tsf
100											
20	SS-7 20.0'- 22.0'	22/24	4 4 4 5		CL	SAA	-	-	-	-	SS-7: ppd=2.0 tsf
						22.0					
						EOB at 22 feet					

Water Level Data					
Date	Time	Elapsed Time (hr)	Depth in feet: Bottom of Hole	Depth in feet: Water	

Minor Constituent Proportions	
And	35 - 50%
Some	20 - 35%
Little	10 - 20%
Trace	<10%

Soil Density	
Very Loose	0 - 4
Loose	4 - 10
Medium Dense	10 - 30
Dense	30 - 50
Very Dense	>50

Soil Consistency	
Very Soft	0 - 2
Soft	2 - 4
Medium Stiff	4 - 8
Stiff	8 - 15
Very Stiff	15 - 30
Hard	>30

Sample Type	
SS	Split Spoon
ST	Shelby Tube
GS	Grab Sample
ET	Extruded Tube
C	Rock Core

Notes: ppd = pocket penetrometer in diametral direction

Boring No.: **GB-4**

Field Test Legend: Dilatancy: N - None S - Slow R - Rapid; Toughness: L - Low M - Medium H - High; Plasticity: NP - Non-Plastic L - Low M - Medium H - High; Dry Strength: N - None L - Low M - Medium H - High VH - Very High

NOTES: Soil identifications and field tests based on visual-manual methods per ASTM D2488 and using the modified Burmister System

SOIL BORING LOG

FUSS & O'NEILL

BORING NO.: **GB-5**
Page 1 of 2

Project:	Harbor Brook Channel Improvements and Linear Trail	**Project No.:**	20170932.C10
Location:	Meriden, Connecticut	**Project Mgr:**	James Otis
Client:	City of Meriden	**Field Eng. Staff:**	H. Humphrey
Drilling Co.:	General Borings Inc.	**Date Started:**	May 8, 2020
Driller:	J. Casson	**Date Finished:**	May 8, 2020

Elevation: 123 ft. | **Vertical Datum:** NAVD 1988 | **Boring Location:** See Figure 1 | **Coord.:** Not Surveyed | **Horizontal Datum:**

Item	Casing	Sampler	Core Barrel
Type	HSA	SS	-
Length (ft)	5	2	-
Inside Dia. (in.)	3.25	1.375	-
Hammer Wt. (lb.)	-	140	-
Hammer Fall (in.)	-	30	-

Rig Make & Model: Diedrich D-50
☐ Truck ☐ Tripod ☐ Cat-Head
☐ Rubber Tire ☐ Geoprobe ☐ Winch
☑ Track ☐ Air Track ☐ Roller Bit
☐ Skid ☐ ☑ Cutting Head

Hammer Type: ☐ Safety ☐ Doughnut ☑ Automatic ☐

Drilling Fluid: ☐ Bentonite ☐ Polymer ☐ Water ☑ None

Drill Rod Size:

Casing Advance: Hollow Stem Augers

Depth/ Elev. (ft)	Sample No. / Interval (ft)	Rec / Pen. (in)	Sample Blows per 6"	Stratum Graphic	USCS Symbol Group	Visual - Manual Identification & Description* (density/consistency, color, Group Name & Symbol, maximum particle size, structure, odor, moisture, optional descriptions, geologic interpretation)	Dilatancy	Toughness	Plasticity	Dry Strength	Remarks
						0.3 **ASPHALT**					
	SS-1 1.0'- 3.0'	24/24	4 4 4 10			Brown, fine to medium SAND, some Gravel, little Silt, trace Brick, trace Asphalt, dry **(FILL)**	-	-	-	-	
120	SS-2 3.0'- 5.0'	4/24	8 29 40 22			SAA	-	-	-	-	
5	SS-3 5.0'- 7.0'	24/24	13 8 21 30			Reddish brown, fine to medium SAND, some Gravel, little Silt, dry **(FILL)**	-	-	-	-	
	SS-4 7.0'- 9.0'	12/24	15 7 7 14			Top 6" - SAA Bottom 6" - Reddish brown CLAY, little Silt, trace Asphalt, wet (piece of gravel in tip of sampler) **(FILL)**	-	-	-	-	GW @ 9' bgs
						10.0					
10	SS-5 10.0'- 12.0'	0/24	17 13 10 18			No Recovery	-	-	-	-	
110	SS-6 12.0'- 14.0'	2/24	29 27 23 24		SM	Dense to very dense, reddish brown, fine to medium SAND, some Gravel, little Silt, occasional Cobbles, wet	-	-	-	-	
15	SS-7 15.0'- 17.0'	0/24	11 12 13 14			No Recovery	-	-	-	-	
						17.0					
20	SS-8 20.0'- 22.0'	18/24	4 6 10 9		CL	Very stiff, reddish brown CLAY, trace to little Sand, wet	-	-	-	-	SS-8: ppd=1.0 tsf
100											

Water Level Data					
Date	Time	Elapsed Time (hr)	Depth in feet: Bottom of Hole	Depth in feet: Water	

Minor Constituent Proportions	
And	35 - 50%
Some	20 - 35%
Little	10 - 20%
Trace	<10%

Soil Density	
Very Loose	0 - 4
Loose	4 - 10
Medium Dense	10 - 30
Dense	30 - 50
Very Dense	>50

Soil Consistency	
Very Soft	0 - 2
Soft	2 - 4
Medium Stiff	4 - 8
Stiff	8 - 15
Very Stiff	15 - 30
Hard	>30

Sample Type	
SS	Split Spoon
ST	Shelby Tube
GS	Grab Sample
ET	Extruded Tube
C	Rock Core

Notes: ppd = pocket penetrometer in diametral direction
WOH = Weight of Hammer

Boring No.: **GB-5**

Field Test Legend: Dilatancy: N - None S - Slow R - Rapid; Toughness: L - Low M - Medium H - High; Plasticity: NP - Non-Plastic L - Low M - Medium H - High; Dry Strength: N - None L - Low M - Medium H - High VH - Very High

NOTES: Soil identifications and field tests based on visual-manual methods per ASTM D2488 and using the modified Burmister System

No.	DATE	DESCRIPTION	DESIGNER	REVIEWER

SEAL

SEAL

SCALE: HORZ.: VERT.:
DATUM: HORZ.: VERT.:
0
GRAPHIC SCALE

FUSS & O'NEILL
146 HARTFORD ROAD
MANCHESTER, CONNECTICUT 06040
860.646.2469
www.fando.com

CITY OF MERIDEN

BORING LOGS III

BRIDGE REPLACEMENTS AND UTILITY IMPROVEMENTS
BUTLER STREET AND HANOVER STREET
MERIDEN CONNECTICUT

PROJ. No.: 20170932.C11
DATE: FEBRUARY 27, 2024

SA-104

File Path: J:\DWG\P2017\0932\C11\Structural\Plan\20170932C11_01_LOCATION PLAN.dwg Layout: SA-104 Plotted: Wed, February 28, 2024 - 2:53 PM User: astripsky
PC3: AUTOCAD PDF (GENERAL DOCUMENTATION).PC3 STB/CTB: FO.STB
LAYER STATE:
MS VIEW:

SOIL BORING LOG
(continued)

FUSS & O'NEILL

BORING NO.: **GB-5**
Page **2** of **2**

Depth/ Elev. (ft)	Sample No. / Interval (ft)	Rec / Pen. (in)	Sample Blows per 6"	Stratum Graphic	USCS Symbol Group	Visual - Manual Identification & Description* (density/consistency, color, Group Name & Symbol, maximum particle size, structure, odor, moisture, optional descriptions, geologic interpretation)	Field Tests: Dilatancy	Toughness	Plasticity	Dry Strength	Remarks*
	SS-9 25.0'- 27.0'	24/24	WOH 3 5 6		CL	Medium stiff to stiff, reddish brown CLAY, trace Sand, wet	-	-	-	-	SS-9: ppd=1.0 tsf WOH = Weight of Hammer
30	SS-10 30.0'- 32.0'	24/24	2 4 3 3		CL	Medium stiff, reddish brown CLAY, trace Sand, wet	-	-	-	-	
90											
35											
40	SS-11 40.0'- 42.0'	16/24	2 5 8 12		CL	Top 10" - SAA 41.5	-	-	-	-	
80					SM	Bottom 6" - Reddish brown, fine to medium SAND, some Gravel, little Silt, moist					
45											
50	SS-12 50.0'- 50.3'	3/3	50/3"			50.0 50.3 Piece of Arkose in tip of sampler EOB at 50.3 feet	-	-	-	-	
70											
55											

NOTES:

PROJECT NO.: **20170932.C10** BORING NO.: **GB-5**

NOTES: Soil identifications and field tests based on visual-manual methods per ASTM D2488 and using the modified Burmister System

SOIL BORING LOG

FUSS & O'NEILL

BORING NO.: **GB-6**
Page **1** of **1**

Project:	Harbor Brook Channel Improvements and Linear Trail	**Project No.:**	20170932.C10
Location:	Meriden, Connecticut	**Project Mgr:**	James Otis
Client:	City of Meriden	**Field Eng. Staff:**	H. Humphrey
Drilling Co.:	General Borings Inc.	**Date Started:**	May 8, 2020
Driller:	J. Casson	**Date Finished:**	May 8, 2020

Elevation: 121.5 ft. **Vertical Datum:** NAVD 1988 **Boring Location:** See Figure 1 **Coord.:** Not Surveyed **Horizontal Datum:**

Item	Casing	Sampler	Core Barrel
Type	HSA	SS	-
Length (ft)	5	2	-
Inside Dia. (in.)	3.25	1.375	-
Hammer Wt. (lb.)	-	140	-
Hammer Fall (in.)	-	30	-

Rig Make & Model: Diedrich D-50
☐ Truck ☐ Tripod ☐ Cat-Head
☐ Rubber Tire ☐ Geoprobe ☐ Winch
☑ Track ☐ Air Track ☐ Roller Bit
☐ Skid ☐ _____ ☑ Cutting Head

Hammer Type: ☐ Safety ☐ Doughnut ☑ Automatic ☐ _____

Drilling Fluid: ☐ Bentonite ☐ Polymer ☐ Water ☑ None

Drill Rod Size: **Casing Advance** Hollow Stem Augers

Depth/ Elev. (ft)	Sample No. / Interval (ft)	Rec / Pen. (in)	Sample Blows per 6"	Stratum Graphic	USCS Symbol Group	Visual - Manual Identification & Description* (density/consistency, color, Group Name & Symbol, maximum particle size, structure, odor, moisture, optional descriptions, geologic interpretation)	Field Tests: Dilatancy	Toughness	Plasticity	Dry Strength	Remarks
120	SS-1 0.0'- 2.0'	14/24	8 6 7 9			0.3 **CRUSHED STONE** Black to brown, fine to medium SAND, some Gravel, little Silt, trace Brick, dry **(FILL)**	-	-	-	-	
	SS-2 2.0'- 4.0'	8/24	6 9 5 10			Pieces of red brick in sampler **(FILL)**	-	-	-	-	
5	SS-3 5.0'- 7.0'	6/24	29 13 6 10			Reddish brown, fine to medium SAND, some Gravel, little Silt, dry **(FILL)**	-	-	-	-	
	SS-4 7.0'- 9.0'	12/24	4 5 6 7			Reddish brown, fine to medium SAND, some Gravel, little Silt, trace Brick, wet **(FILL)** 9.5	-	-	-	-	GW @ 9' bgs
10	SS-5 10.0'- 12.0'	5/24	5 5 5 6		PT	Stiff, brown, PEAT, fibrous, wet 12.5	-	-	-	-	SS-5: ppd=0.25 tsf
110	SS-6 12.0'- 14.0' SS	12/24	6 8 9 8		CL	Very stiff, reddish brown CLAY, trace to little fine Sand, moist	-	-	-	-	SS-: ppd=0.75 tsf
15											
20	SS-7 20.0'- 22.0'	14/24	6 6 7 7		CL	Stiff, reddish brown CLAY, trace Silt, trace fine Sand, moist 22.0	-	-	-	-	SS-7: ppd=1.5 tsf
100						EOB at 22 feet					

Water Level Data				
Date	Time	Elapsed Time (hr)	Depth in feet: Bottom of Hole	Depth in feet: Water

Minor Constituent Proportions	
And	35 - 50%
Some	20 - 35%
Little	10 - 20%
Trace	<10%

Soil Density	
Very Loose	0 - 4
Loose	4 - 10
Medium Dense	10 - 30
Dense	30 - 50
Very Dense	>50

Soil Consistency	
Very Soft	0 - 2
Soft	2 - 4
Medium Stiff	4 - 8
Stiff	8 - 15
Very Stiff	15 - 30
Hard	>30

Sample Type	
SS	Split Spoon
ST	Shelby Tube
GS	Grab Sample
ET	Extruded Tube
C	Rock Core

Notes: ppd = pocket penetrometer in diametral direction

Boring No.: **GB-6**

Field Test Legend: Dilatancy: N - None S - Slow R - Rapid; Toughness: L - Low M - Medium H - High; Plasticity: NP - Non-Plastic L - Low M - Medium H - High; Dry Strength: N - None L - Low M - Medium H - High VH - Very High

NOTES: Soil identifications and field tests based on visual-manual methods per ASTM D2488 and using the modified Burmister System

No.	DATE	DESCRIPTION	DESIGNER	REVIEWER

SEAL

SEAL

SCALE: HORZ.: VERT.:
DATUM: HORZ.: VERT.:
0
GRAPHIC SCALE

FUSS & O'NEILL
146 HARTFORD ROAD
MANCHESTER, CONNECTICUT 06040
860.646.2469
www.fando.com

CITY OF MERIDEN

BORING LOGS IV

BRIDGE REPLACEMENTS AND UTILITY IMPROVEMENTS
BUTLER STREET AND HANOVER STREET
MERIDEN CONNECTICUT

PROJ. No.: 20170932.C11
DATE: FEBRUARY 27, 2024

SA-105

File Path: J:\DWG\P2017\0932\C11\Structural\Plan\20170932C11_01_LOCATION PLAN.dwg Layout: SA-105 Plotted: Wed, February 28, 2024 - 2:53 PM User: astripsky
PC3: AUTOCAD PDF (GENERAL DOCUMENTATION).PC3 STB/CTB: FO.STB
LAYER STATE:
MS VIEW:

SOIL BORING LOG

FUSS & O'NEILL

BORING NO.: **GB-7**
Page 1 of 1

Project:	Harbor Brook Channel Improvements and Linear Trail	**Project No.:**	20170932.C10
Location:	Meriden, Connecticut	**Project Mgr:**	James Otis
Client:	City of Meriden	**Field Eng. Staff:**	H. Humphrey
Drilling Co.:	General Borings Inc.	**Date Started:**	May 8, 2020
Driller:	J. Casson	**Date Finished:**	May 8, 2020

Elevation: 121.5 ft. **Vertical Datum:** NAVD 1988 **Boring Location:** See Figure 1 **Coord.:** Not Surveyed **Horizontal Datum:**

Item	Casing	Sampler	Core Barrel
Type	HSA	SS	-
Length (ft)	5	2	-
Inside Dia. (in.)	3.25	1.375	-
Hammer Wt. (lb.)	-	140	-
Hammer Fall (in.)	-	30	-

Rig Make & Model: Diedrich D-50
☐ Truck ☐ Tripod ☐ Cat-Head
☐ Rubber Tire ☐ Geoprobe ☐ Winch
☑ Track ☐ Air Track ☐ Roller Bit
☐ Skid ☐ ☑ Cutting Head

Hammer Type: ☐ Safety ☐ Doughnut ☑ Automatic ☐

Drilling Fluid: ☐ Bentonite ☐ Polymer ☐ Water ☑ None

Drill Rod Size: **Casing Advance** Hollow Stem Augers

Depth/ Elev. (ft)	Sample No. / Interval (ft)	Rec / Pen. (in)	Sample Blows per 6"	Stratum Graphic	USCS Symbol Group	Visual - Manual Identification & Description* (density/consistency, color, Group Name & Symbol, maximum particle size, structure, odor, moisture, optional descriptions, geologic interpretation)	Field Tests: Dilatancy	Toughness	Plasticity	Dry Strength	Remarks
	SS-1 0.0'- 2.0'	12/24	10 8 6 11			0.3 **CRUSHED STONE**	-	-	-	-	
120						Black to brown, fine to medium SAND, some Gravel, little Silt, trace Brick, dry **(FILL)**					
	SS-2 2.0'- 2.3'	3/3	50/3"			Cobble in tip of sampler	-	-	-	-	
5	SS-3 5.0'- 5.2'	2/2	50/2"			Cobble in tip of sampler	-	-	-	-	
						8.0 Auger Refusal at 8 feet on Possible Boulder					
10											
110											
15											
20											
100											

Water Level Data: Date	Time	Elapsed Time (hr)	Depth in feet: Bottom of Hole	Water

Minor Constituent Proportions	
And	35 - 50%
Some	20 - 35%
Little	10 - 20%
Trace	<10%

Soil Density	
Very Loose	0 - 4
Loose	4 - 10
Medium Dense	10 - 30
Dense	30 - 50
Very Dense	>50

Soil Consistency	
Very Soft	0 - 2
Soft	2 - 4
Medium Stiff	4 - 8
Stiff	8 - 15
Very Stiff	15 - 30
Hard	>30

Sample Type	
SS	Split Spoon
ST	Shelby Tube
GS	Grab Sample
ET	Extruded Tube
C	Rock Core

Notes: Offset boring 3 feet north. Auger refusal at 8 feet on possible boulder.

GW not encountered

Boring No.: **GB-7**

Field Test Legend: Dilatancy: N - None S - Slow R - Rapid; Toughness: L - Low M - Medium H - High; Plasticity: NP - Non-Plastic L - Low M - Medium H - High; Dry Strength: N - None L - Low M - Medium H - High VH - Very High

NOTES: Soil identifications and field tests based on visual-manual methods per ASTM D2488 and using the modified Burmister System

SOIL BORING LOG

FUSS & O'NEILL

BORING NO.: **GB-8**
Page 1 of 1

Project:	Harbor Brook Channel Improvements and Linear Trail	**Project No.:**	20170932.C10
Location:	Meriden, Connecticut	**Project Mgr:**	James Otis
Client:	City of Meriden	**Field Eng. Staff:**	H. Humphrey
Drilling Co.:	General Borings Inc.	**Date Started:**	May 8, 2020
Driller:	J. Casson	**Date Finished:**	May 8, 2020

Elevation: 122 ft. **Vertical Datum:** NAVD 1988 **Boring Location:** See Figure 1 **Coord.:** Not Surveyed **Horizontal Datum:**

Item	Casing	Sampler	Core Barrel
Type	HSA	SS	-
Length (ft)	5	2	-
Inside Dia. (in.)	3.25	1.375	-
Hammer Wt. (lb.)	-	140	-
Hammer Fall (in.)	-	30	-

Rig Make & Model: Diedrich D-50
☐ Truck ☐ Tripod ☐ Cat-Head
☐ Rubber Tire ☐ Geoprobe ☐ Winch
☑ Track ☐ Air Track ☐ Roller Bit
☐ Skid ☐ ☑ Cutting Head

Hammer Type: ☐ Safety ☐ Doughnut ☑ Automatic ☐

Drilling Fluid: ☐ Bentonite ☐ Polymer ☐ Water ☑ None

Drill Rod Size: **Casing Advance** Hollow Stem Augers

Depth/ Elev. (ft)	Sample No. / Interval (ft)	Rec / Pen. (in)	Sample Blows per 6"	Stratum Graphic	USCS Symbol Group	Visual - Manual Identification & Description* (density/consistency, color, Group Name & Symbol, maximum particle size, structure, odor, moisture, optional descriptions, geologic interpretation)	Field Tests: Dilatancy	Toughness	Plasticity	Dry Strength	Remarks
	SS-1 0.0'- 2.0'	14/24	2 4 10 5			0.5 **TOPSOIL**	-	-	-	-	
						1.0 Orangish brown, fine to medium SAND, some Silt, trace Roots **(SUBSOIL)**					
						Brown, fine to medium SAND, some Gravel, little Silt, trace Brick, dry **(FILL)**					
120	SS-2 2.0'- 4.0'	20/24	16 14 24 22			SAA	-	-	-	-	
5	SS-3 5.0'- 5.7'	6/8	23 50/2"			SAA, occasional cobbles	-	-	-	-	
	SS-4 7.0'- 9.0'	14/24	11 8 8 7			SAA, except wet	-	-	-	-	GW @ 8' bgs
						9.0					
10	SS-5 10.0'- 12.0'	12/24	6 5 4 5		SP-SM	11.5 Top 9" - Brown, fine to medium SAND, some Gravel, little Silt, wet	-	-	-	-	SS-5: ppd=1.5 tsf
110					CL	Bottom 3" - Reddish brown CLAY, trace fine Sand					
						15.0					
15	SS-6 15.0'- 17.0'	0/24	6 8 8 16		SC	No Recovery	-	-	-	-	USCS symbol based on auger spoils.
20	SS-7 20.0'- 22.0'	16/24	9 9 13 15		SC	Medium dense, brown, fine to medium SAND, little Clay, moist	-	-	-	-	
						22.0					
100						EOB at 22 feet					

Water Level Data: Date	Time	Elapsed Time (hr)	Depth in feet: Bottom of Hole	Water

Minor Constituent Proportions	
And	35 - 50%
Some	20 - 35%
Little	10 - 20%
Trace	<10%

Soil Density	
Very Loose	0 - 4
Loose	4 - 10
Medium Dense	10 - 30
Dense	30 - 50
Very Dense	>50

Soil Consistency	
Very Soft	0 - 2
Soft	2 - 4
Medium Stiff	4 - 8
Stiff	8 - 15
Very Stiff	15 - 30
Hard	>30

Sample Type	
SS	Split Spoon
ST	Shelby Tube
GS	Grab Sample
ET	Extruded Tube
C	Rock Core

Notes:

Boring No.: **GB-8**

Field Test Legend: Dilatancy: N - None S - Slow R - Rapid; Toughness: L - Low M - Medium H - High; Plasticity: NP - Non-Plastic L - Low M - Medium H - High; Dry Strength: N - None L - Low M - Medium H - High VH - Very High

NOTES: Soil identifications and field tests based on visual-manual methods per ASTM D2488 and using the modified Burmister System

No.	DATE	DESCRIPTION	DESIGNER	REVIEWER

SEAL

SEAL

STATE OF CONNECTICUT · RICHARD E. SOUCY · No. 22072 · LICENSED PROFESSIONAL ENGINEER

SCALE: HORZ.: VERT.:
DATUM: HORZ.: VERT.:
0
GRAPHIC SCALE

FUSS & O'NEILL
146 HARTFORD ROAD
MANCHESTER, CONNECTICUT 06040
860.646.2469
www.fando.com

CITY OF MERIDEN

BORING LOGS V

BRIDGE REPLACEMENTS AND UTILITY IMPROVEMENTS
BUTLER STREET AND HANOVER STREET
MERIDEN CONNECTICUT

PROJ. No.: 20170932.C11
DATE: FEBRUARY 27, 2024

SA-106

File Path: J:\DWG\P\20170932\C11\Structural\Plan\20170932C11_01_LOCATION PLAN.dwg Layout: SA-106 Plotted: Wed, February 28, 2024 - 2:53 PM User: astripsky PC3: AUTOCAD PDF (GENERAL DOCUMENTATION).PC3 STB/CTB: FO.STB
LAYER STATE:
MS VIEW:

SOIL BORING LOG

FUSS & O'NEILL

BORING NO.: **GP-1**
Page 1 of 1

Project:	Harbor Brook Channel Improvements and Linear Trail	**Project No.:**	20170932.C10
Location:	Meriden, Connecticut	**Project Mgr:**	James Otis
Client:	City of Meriden	**Field Eng. Staff:**	H. Humphrey
Drilling Co.:	General Borings Inc.	**Date Started:**	May 8, 2020
Driller:	J. Casson	**Date Finished:**	May 8, 2020

Elevation: 125 ft. **Vertical Datum:** NAVD 1988 **Boring Location:** See Figure 1 **Coord.:** Not Surveyed
Horizontal Datum:

Item	Casing	Sampler	Core Barrel
Type	HSA	SS	-
Length (ft)	5	2	-
Inside Dia. (in.)	3.25	1.375	-
Hammer Wt. (lb.)	-	140	-
Hammer Fall (in.)	-	30	-

Rig Make & Model: Diedrich D-50
☐ Truck ☐ Tripod ☐ Cat-Head
☐ Rubber Tire ☐ Geoprobe ☐ Winch
☑ Track ☐ Air Track ☐ Roller Bit
☐ Skid ☐ _____ ☑ Cutting Head

Hammer Type: ☐ Safety ☐ Doughnut ☐ Automatic ☐ _____

Drilling Fluid: ☐ Bentonite ☐ Polymer ☐ Water ☑ None

Drill Rod Size:

Casing Advance: Hollow Stem Augers

Depth/ Elev. (ft)	Sample No. / Interval (ft)	Rec / Pen. (in)	Sample Blows per 6"	Stratum Graphic	USCS Symbol Group	Visual - Manual Identification & Description* (density/consistency, color, Group Name & Symbol, maximum particle size, structure, odor, moisture, optional descriptions, geologic interpretation)	Field Tests: Dilatancy	Toughness	Plasticity	Dry Strength	Remarks
						0.2 **ASPHALT**					
5 120						Brown, fine to coarse SAND, some Gravel, little Silt, trace Brick, dry **(FILL))**					
						10.0 EOP at 10 feet					
10											
15 110											
20											

Water Level Data

Date	Time	Elapsed Time (hr)	Depth in feet: Bottom of Hole	Water

Minor Constituent Proportions

And	35 - 50%
Some	20 - 35%
Little	10 - 20%
Trace	<10%

Soil Density

Very Loose	0 - 4
Loose	4 - 10
Medium Dense	10 - 30
Dense	30 - 50
Very Dense	>50

Soil Consistency

Very Soft	0 - 2
Soft	2 - 4
Medium Stiff	4 - 8
Stiff	8 - 15
Very Stiff	15 - 30
Hard	>30

Sample Type

SS	Split Spoon
ST	Shelby Tube
GS	Grab Sample
ET	Extruded Tube
C	Rock Core

Notes: GW not encountered

Boring No.: **GP-1**

Field Test Legend: Dilatancy: N - None S - Slow R - Rapid Plasticity: NP - Non-Plastic L - Low M - Medium H - High
Toughness: L - Low M - Medium H - High Dry Strength: N - None L - Low M - Medium H - High VH - Very High

NOTES: Soil identifications and field tests based on visual-manual methods per ASTM D2488 and using the modified Burmister System

TEST PIT NO.: GTP-1

FUSS & O'NEILL

Project:	Harbor Brook Channel Improvements and Linear Trail	**Project No.:**	20170932.C10
Location:	Meriden, Connecticut	**Project Mgr:**	James Otis
Client:	City of Meriden	**Field Eng. Staff:**	B Opp
Drilling Co.:	Cisco LLC	**Date/Time Started:**	April 28, 2020
Driller:	J. Alves	**Date/Time Finished:**	April 28, 2020

Elevation: ft. **Vertical Datum:**

Horizontal Datum:
Coord.: Not Surveyed
Test Pit Location and Site Description: See Figure 1
STA.: -- **Offset:** --

Methods / Equipment:
x Hydraulic Excavator ☐ Bulldozer
☐ Rubber-Tired Backhoe ☐ _____
☐ Powered Auger
☐ Hand Auger / Pick & Shovel

Test Pit Dimensions:
Width: 2 ft
Length: 6 ft
Depth: 9.5 ft
Remarks:

Elev. (ft)	Depth (ft)	Sample Number	Sample Depth	Stratum Graphic	USCS Group Symbol	Visual - Manual Identification & Description* (Moisture, density/consistency, color, MAJOR CONSTITUENT (USCS Symbol), minor constituents, structure, odor, optional description, geologic interpretation)	Field Tests: Dilatancy	Toughness	Plasticity	Dry Strength	Remarks
	0					**TOPSOIL**	-	-	-	-	
	5					Black to brown, fine to coarse SAND, some Gravel, little Silt, trace Metal, trace Concrete, trace Asphalt, trace Wood, trace, Slag, trace Plastic, dry **(FILL)**	-	-	-	-	
	10					Brown, fine to coarse SAND, some Gravel, little Silt, moderately organic, wet	-	-	-	-	GW at 9.5' bgs
						EOTP at 9.5 feet	-	-	-	-	
	15										
	20										

Water Level Data

Date	Time	Elapsed Time (hr)	Depth in feet to: Excav. Bottom	Seep	Water Surface

Field Test Legend
Dilatancy: N - None; S - Slow; R - Rapid
Toughness: L - Low; M - Medium; H - High
Plasticity: NP - Non-Plastic; L - Low; M - Medium; H - High
Dry Strength: N - None; L - Low; M - Medium; H - High; VH - Very High

*Note: Soil identifications based on visual-manual methods in accordance with ASTM D2488.

Notes:

Test Pit No.: **GTP-1**

No.	DATE	DESCRIPTION	DESIGNER	REVIEWER

SEAL

SEAL

SCALE:
HORZ.:
VERT.:
DATUM:
HORZ.:
VERT.:
0
GRAPHIC SCALE

FUSS & O'NEILL
146 HARTFORD ROAD
MANCHESTER, CONNECTICUT 06040
860.646.2469
www.fando.com

CITY OF MERIDEN

BORING LOGS VI

BRIDGE REPLACEMENTS AND UTILITY IMPROVEMENTS
BUTLER STREET AND HANOVER STREET
MERIDEN CONNECTICUT

PROJ. No.: 20170932.C11
DATE: FEBRUARY 27, 2024

SA-107

File Path: J:\DWG\P2017\0932\C11\Structural\Plan\20170932C11_01_LOCATION PLAN.dwg Layout: SA-107 Plotted: Wed, February 28, 2024 - 2:53 PM User: astripsky
PC3: AUTOCAD PDF (GENERAL DOCUMENTATION).PC3 STB/CTB: FO.STB
MS VIEW:
LAYER STATE:

FUSS & O'NEILL

TEST PIT NO.: **GTP-2**

Project:	Harbor Brook Channel Improvements and Linear Trail	**Project No.:**	20170932.C10
Location:	Meriden, Connecticut	**Project Mgr:**	James Otis
Client:	City of Meriden	**Field Eng. Staff:**	B Opp
Drilling Co.:	Cisco LLC	**Date/Time Started:**	April 28, 2020
Driller:	J. Alves	**Date/Time Finished:**	April 28, 2020

Elevation: ft. **Vertical Datum:**

Horizontal Datum:

Coord.: Not Surveyed

Test Pit Location and Site Description: See Figure 1

STA.: -- **Offset:** --

Methods / Equipment:
- x Hydraulic Excavator
- ☐ Rubber-Tired Backhoe
- ☐ Powered Auger
- ☐ Hand Auger / Pick & Shovel
- ☐ Bulldozer
- ☐ _____

Test Pit Dimensions:
Width: 2 ft
Length: 6 ft
Depth: 3.5 ft
Remarks:

Elev. (ft)	Depth (ft)	Sample Number	Sample Depth	Stratum Graphic	USCS Group Symbol	Visual - Manual Identification & Description* (Moisture, density/consistency, color, MAJOR CONSTITUENT (USCS Symbol), minor constituents, structure, odor, optional description, geologic interpretation)	Field Tests: Dilatancy	Toughness	Plasticity	Dry Strength	Remarks
	0					**TOPSOIL**	-	-	-	-	
						Black to brown, fine to coarse SAND, some Gravel, little Silt, trace Concrete, trace Asphalt, dry **(FILL)**	-	-	-	-	
						EOTT at 3.5 feet	-	-	-	-	
	5										
	10										
	15										
	20										

Water Level Data

Date	Time	Elapsed Time (hr)	Depth in feet to: Excav. Bottom	Seep	Water Surface

Field Test Legend
Dilatancy: N - None; S - Slow; R - Rapid
Toughness: L - Low; M - Medium; H - High
Plasticity: NP - Non-Plastic; L - Low; M - Medium; H - High
Dry Strength: N - None; L - Low; M - Medium; H - High; VH - Very High

*Note: Soil identifications based on visual-manual methods in accordance with ASTM D2488.

Notes:

Test Pit No.: **GTP-2**

FUSS & O'NEILL

SOIL BORING LOG

BORING NO.: **B-105**
Page **1** of **2**

Project:	Harbor Brook Channel Improvements	**Project No.:**	20170932.C11
Location:	Meriden CT	**Project Mgr:**	E. Leohmann
Client:	City of Meriden	**Field Eng. Staff:**	C Jenkins
Drilling Co.:	General Boring Inc.	**Date Started:**	July 14, 2021
Driller:	J. Casson	**Date Finished:**	July 14, 2021

Elevation: 121 ft. **Vertical Datum:** NAVD 1988 **Boring Location:** See Plan **Coord.:** **N:** 755898.318 **E:** 984725.42
Horizontal Datum: WGS 1984

Item	Casing	Sampler	Core Barrel
Type	HSA	SS	-
Length (ft)	5	2	-
Inside Dia. (in.)	3.25	1.375	-
Hammer Wt. (lb.)	-	140	-
Hammer Fall (in.)	-	30	-

Rig Make & Model: Diedrich D-50
- ☐ Truck ☐ Tripod ☐ Cat-Head
- ☐ Rubber Tire ☐ Geoprobe ☐ Winch
- ☑ Track ☐ Air Track ☐ Roller Bit
- ☐ Skid ☐ _____ ☑ Cutting Head

Hammer Type
- ☐ Safety
- ☐ Doughnut
- ☑ Automatic
- ☐ _____

Drilling Fluid
- ☐ Bentonite
- ☐ Polymer
- ☐ Water
- ☑ None

Drill Rod Size:
Casing Advance
Hollow Stem Augers

Depth/ Elev. (ft)	Sample No. / Interval (ft)	Rec / Pen. (in)	Sample Blows per 6"	Stratum Graphic	USCS Symbol Group	Visual - Manual Identification & Description* (density/consistency, color, Group Name & Symbol, maximum particle size, structure, odor, moisture, optional descriptions, geologic interpretation)	Field Tests: Dilatancy	Toughness	Plasticity	Dry Strength	Remarks
						0.4 **BITUMINOUS CONCRETE**					
120	SS-1 1.0'- 3.0'	16/24	9 19 17 14		FILL	Top 6": Dark Brown, fine to medium SAND, little Silt, some Gravel, trace Asphalt	-	-	-	-	
					FILL	Bottom 18": Dark brown, fine to coarse SAND, some Silt, trace Asphalt, trace Brick, trace Plastic, occasional Cobbles					
	SS-2 3.0'- 5.0'	16/24	6 5 4 7		FILL	Dark brown, fine to coarse SAND, and Silt, little Gravel, trace Asphalt, trace Brick, trace Clay	-	-	-	-	
5	SS-3 5.0'- 7.0'	5/24	25 13 7 3		FILL	Brown, fine to coarse SAND, some Silt, little Gravel, trace Clay	-	-	-	-	
						7.0					
	SS-4 7.0'- 9.0'	13/24	3 3 4 5		CL	Medium stiff, Light brown, CLAY, some Silt, trace Sand, trace Roots, moist	-	-	-	-	
						9.0					
					SP-SM	Medium dense, brown, fine to coarse SAND, and Gravel, little Silt, trace Clay, occasional Cobbles					
10 110	SS-5 10.0'- 12.0'	9/24	10 14 12 6				-	-	-	-	
						15.0					
15	SS-6 15.0'- 17.0'	4/24	16 20 18 7		CL-ML	Hard, brown SILT, and Clay, trace Gravel, occasional Cobbles	-	-	-	-	
20 100	SS-7 20.0'- 22.0'	19/24	6 6 7 9		CL-ML	Stiff, brown, CLAY, and Silt, trace Sand	-	-	-	-	

Water Level Data

Date	Time	Elapsed Time (hr)	Depth in feet: Bottom of Hole	Water

Minor Constituent Proportions

And	35 - 50%
Some	20 - 35%
Little	10 - 20%
Trace	<10%

Soil Density

Very Loose	0 - 4
Loose	4 - 10
Medium Dense	10 - 30
Dense	30 - 50
Very Dense	>50

Soil Consistency

Very Soft	0 - 2
Soft	2 - 4
Medium Stiff	4 - 8
Stiff	8 - 15
Very Stiff	15 - 30
Hard	>30

Sample Type
- **SS** Split Spoon
- **ST** Shelby Tube
- **GS** Grab Sample
- **ET** Extruded Tube
- **RC** Core Sample

Notes:
Groundwater observed at 10'.

Boring No.: **B-105**

Field Test Legend: Dilatancy: N - None S - Slow R - Rapid Toughness: L - Low M - Medium H - High Plasticity: NP - Non-Plastic L - Low M - Medium H - High Dry Strength: N - None L - Low M - Medium H - High VH - Very High

NOTES: Soil identifications and field tests based on visual-manual methods per ASTM D2488 and using the modified Burmister System

No.	DATE	DESCRIPTION	DESIGNER	REVIEWER

SEAL

SEAL

STATE OF CONNECTICUT · KRISTEN E. SOLOMON · No. 22072 · LICENSED PROFESSIONAL ENGINEER

SCALE: HORZ.: VERT.:
DATUM: HORZ.: VERT.:
0
GRAPHIC SCALE

FUSS & O'NEILL
146 HARTFORD ROAD
MANCHESTER, CONNECTICUT 06040
860.646.2469
www.fando.com

CITY OF MERIDEN

BORING LOGS VII

BRIDGE REPLACEMENTS AND UTILITY IMPROVEMENTS
BUTLER STREET AND HANOVER STREET
MERIDEN CONNECTICUT

PROJ. No.: 20170932.C11
DATE: FEBRUARY 27, 2024

SA-108

File Path: J:\DWG\P2017\0932\C11\Structural\Plan\20170932C11_01_LOCATION PLAN.dwg Layout: SA-108 Plotted: Wed, February 28, 2024 - 2:53 PM User: astripsky
PC3: AUTOCAD PDF (GENERAL DOCUMENTATION).PC3 STB/CTB: FO.STB
MS VIEW: LAYER STATE:

SOIL BORING LOG
(continued)

FUSS & O'NEILL

BORING NO.: **B-105**

Depth/ Elev. (ft)	Sample No. / Interval (ft)	Rec / Pen. (in)	Sample Blows per 6"	Stratum Graphic	USCS Symbol Group	Visual - Manual Identification & Description* (density/consistency, color, Group Name & Symbol, maximum particle size, structure, odor, moisture, optional descriptions, geologic interpretation)	Field Tests: Dilatancy	Toughness	Plasticity	Dry Strength	Remarks*
25	SS-8 25.0'- 27.0'	5/24	9 7 8 10		CL-ML	Stiff to very Stiff, brown, CLAY, and Silt, trace Gravel, trace Sand	-	-	-	-	
30 / 90	SS-9 30.0'- 32.0'	22/24	4 5 7 6		CL-ML	Stiff, brown, CLAY, and Silt	-	-	-	-	
35	SS-10 35.0'- 37.0'	24/24	4 6 8 9		CL-ML	SAA	-	-	-	-	
40 / 80	SS-11 40.0'- 42.0'	24/24	WOR 2 2 4		CL-ML	Soft to medium stiff, brown CLAY, some Silt	-	-	-	-	WOR = Weight of Rods
45	SS-12 45.0'- 47.0'	21/24	4 10 14 14		CL-ML	SAA, except very stiff	-	-	-	-	
						46.5					
					SM	47.0 Brown, fine to medium SAND, some Silt, trace Gravel					
						Boring Terminated Without Refusal at 47'					
50 / 70											
55											

NOTES:

PROJECT NO.: **20170932.C11** | BORING NO.: **B-105**

NOTES: Soil identifications and field tests based on visual-manual methods per ASTM D2488 and using the modified Burmister System

SOIL BORING LOG

FUSS & O'NEILL

BORING NO.: **B-106**

Project:	Harbor Brook Channel Improvements	**Project No.:**	20170932.C11
Location:	Meriden CT	**Project Mgr:**	E. Leohmann
Client:	City of Meriden	**Field Eng. Staff:**	J Casson
Drilling Co.:	General Boring Inc.	**Date Started:**	July 15, 2021
Driller:	J. Casson	**Date Finished:**	July 15, 2021

Elevation: 121 ft. | **Vertical Datum:** NAVD 1988 | **Boring Location:** See Plan | **Coord.:** N: 756131.099 E: 984813.179 | **Horizontal Datum:** WGS 1984

Item	Casing	Sampler	Core Barrel
Type	HSA	SS	-
Length (ft)	5	2	-
Inside Dia. (in.)	3.25	1.375	-
Hammer Wt. (lb.)	-	140	-
Hammer Fall (in.)	-	30	-

Rig Make & Model: Diedrich D-50
☐ Truck ☐ Tripod ☐ Cat-Head
☐ Rubber Tire ☐ Geoprobe ☐ Winch
☑ Track ☐ Air Track ☐ Roller Bit
☐ Skid ☐ _____ ☑ Cutting Head

Hammer Type: ☐ Safety ☐ Doughnut ☑ Automatic ☐ _____

Drilling Fluid: ☐ Bentonite ☐ Polymer ☐ Water ☑ None

Drill Rod Size: / **Casing Advance:** Hollow Stem Augers

Depth/ Elev. (ft)	Sample No. / Interval (ft)	Rec / Pen. (in)	Sample Blows per 6"	Stratum Graphic	USCS Symbol Group	Visual - Manual Identification & Description* (density/consistency, color, Group Name & Symbol, maximum particle size, structure, odor, moisture, optional descriptions, geologic interpretation)	Field Tests: Dilatancy	Toughness	Plasticity	Dry Strength	Remarks
	SS-1 0.0'- 2.0'	14/24	2 4 6 8		FILL	0.3 TOPSOIL Brown, medium to fine SAND, some Silt, trace Gravel, occasional Cobbles	-	-	-	-	
120	SS-2 2.0'- 3.8'	17/21	6 13 15 50/3		FILL	SAA	-	-	-	-	
						4.0 Boring Terminated Upon Auger Refusal on Possible Conduit at 4'					
5											
10 / 110											
15											
20 / 100											

Water Level Data				
Date	Time	Elapsed Time (hr)	Depth in feet: Bottom of Hole	Depth in feet: Water

Minor Constituent Proportions	
And	35 - 50%
Some	20 - 35%
Little	10 - 20%
Trace	<10%

Soil Density	
Very Loose	0 - 4
Loose	4 - 10
Medium Dense	10 - 30
Dense	30 - 50
Very Dense	>50

Soil Consistency	
Very Soft	0 - 2
Soft	2 - 4
Medium Stiff	4 - 8
Stiff	8 - 15
Very Stiff	15 - 30
Hard	>30

Sample Type	
SS	Split Spoon
ST	Shelby Tube
GS	Grab Sample
ET	Extruded Tube
RC	Core Sample

Notes: Groundwater not encountered.

Boring No.: **B-106**

Field Test Legend: Dilatancy: N - None S - Slow R - Rapid | Toughness: L - Low M - Medium H - High | Plasticity: NP - Non-Plastic L - Low M - Medium H - High | Dry Strength: N - None L - Low M - Medium H - High VH - Very High

NOTES: Soil identifications and field tests based on visual-manual methods per ASTM D2488 and using the modified Burmister System

No.	DATE	DESCRIPTION	DESIGNER	REVIEWER

SEAL

SEAL

STATE OF CONNECTICUT · KRISTEN E. SOLOMON · No. 22072 · LICENSED PROFESSIONAL ENGINEER

SCALE: HORZ.: VERT.:
DATUM: HORZ.: VERT.:
0
GRAPHIC SCALE

FUSS & O'NEILL
146 HARTFORD ROAD
MANCHESTER, CONNECTICUT 06040
860.646.2469
www.fando.com

CITY OF MERIDEN

BORING LOGS VIII

BRIDGE REPLACEMENTS AND UTILITY IMPROVEMENTS
BUTLER STREET AND HANOVER STREET
MERIDEN CONNECTICUT

PROJ. No.: 20170932.C11
DATE: FEBRUARY 27, 2024

SA-109

File Path: J:\DWG\P2017\0932\C11\Structural\Plan\20170932C11_01_LOCATION PLAN.dwg Layout: SA-109 Plotted: Wed, February 28, 2024 - 2:53 PM User: astripsky
PC3: AUTOCAD PDF (GENERAL DOCUMENTATION).PC3 STB/CTB: FO.STB
LAYER STATE:
MS VIEW:

SOIL BORING LOG

FUSS & O'NEILL

BORING NO.: **B-107**
Page **1** of **2**

Project:	Harbor Brook Channel Improvements	**Project No.:**	20170932.C11
Location:	Meriden CT	**Project Mgr:**	E. Leohmann
Client:	City of Meriden	**Field Eng. Staff:**	J Casson
Drilling Co.:	General Boring Inc.	**Date Started:**	July 15, 2021
Driller:	J. Casson	**Date Finished:**	July 15, 2021

Elevation: 124 ft. | **Vertical Datum:** NAVD 1988 | **Boring Location:** See Plan | **Coord.:** **N:** 756225.295 **E:** 985091.672 | **Horizontal Datum:** WGS 1984

Item	Casing	Sampler	Core Barrel
Type	HSA	SS	-
Length (ft)	5	2	-
Inside Dia. (in.)	3.25	1.375	-
Hammer Wt. (lb.)	-	140	-
Hammer Fall (in.)	-	30	-

Rig Make & Model: Diedrich D-50
☐ Truck ☐ Tripod ☐ Cat-Head
☐ Rubber Tire ☐ Geoprobe ☐ Winch
☑ Track ☐ Air Track ☐ Roller Bit
☐ Skid ☐ ☑ Cutting Head

Hammer Type: ☐ Safety ☐ Doughnut ☑ Automatic ☐

Drilling Fluid: ☐ Bentonite ☐ Polymer ☐ Water ☑ None

Drill Rod Size:

Casing Advance: Hollow Stem Augers

Depth/ Elev. (ft)	Sample No. / Interval (ft)	Rec / Pen. (in)	Sample Blows per 6"	Stratum Graphic	USCS Symbol Group	Visual - Manual Identification & Description* (density/consistency, color, Group Name & Symbol, maximum particle size, structure, odor, moisture, optional descriptions, geologic interpretation)	Dilatancy	Toughness	Plasticity	Dry Strength	Remarks
						0.3 **BITUMINOUS CONCRETE**					
	SS-1 1.0'- 3.0'	12/24	2 4 7 13		FILL	Dark brown, fine to medium SAND, some Silt, little Clay, trace Gravel, trace Brick, trace Glass, trace Asphalt, occasional Cobbles	-	-	-	-	
120	SS-2 3.0'- 5.0'	12/24	8 9 8 8		FILL	Dark brown, fine to medium SAND, some Silt, little Clay, trace Gravel, trace Asphalt, trace Brick, trace Glass, trace Wood, occasional Cobbles	-	-	-	-	
5	SS-3 5.0'- 7.0'	2/24	8 9 5 5		FILL	SAA	-	-	-	-	
	SS-4 7.0'- 9.0'	18/24	4 3 4 4		FILL	Dark brown, fine to medium SAND, some Silt, some Asphalt, little Clay, trace Gravel, trace Brick, trace Glass, occasional Cobbles	-	-	-	-	
10	SS-5 10.0'- 12.0'	12/24	10 11 14 4		FILL	Dark brown, GRAVEL, some Brick, little Asphalt, little Sand, little Silt, trace clay, occasional Cobbles	-	-	-	-	
	SS-6 12.0'- 14.0'	24/24	1 1 1 1		FILL	Darker brown, SILT, and fine Sand, trace Gravel, occasional Cobbles	-	-	-	-	
110											
15	SS-7 15.0'- 15.3'	3/3	50/3		FILL	Boulder encountered from 17'-18'	-	-	-	-	
	SS-8 18.0'- 20.0'	4/24	15 20 22 23		FILL	Darker brown, GRAVEL, and Sand, some Silt, little Brick, little Concrete, wet	-	-	-	-	
						20.0					
20	SS-9 20.0'- 22.0'	12/24	20 23 24 20		CL-ML	Hard, brown CLAY, and Silt	-	-	-	-	
						24.0					

Water Level Data

Date	Time	Elapsed Time (hr)	Depth in feet: Bottom of Hole	Depth in feet: Water

Minor Constituent Proportions

And	35 - 50%
Some	20 - 35%
Little	10 - 20%
Trace	<10%

Soil Density

Very Loose	0 - 4
Loose	4 - 10
Medium Dense	10 - 30
Dense	30 - 50
Very Dense	>50

Soil Consistency

Very Soft	0 - 2
Soft	2 - 4
Medium Stiff	4 - 8
Stiff	8 - 15
Very Stiff	15 - 30
Hard	>30

Sample Type

SS	Split Spoon
ST	Shelby Tube
GS	Grab Sample
ET	Extruded Tube
RC	Core Sample

Notes: Groundwater observed at 9.5'

Boring No.: **B-107**

Field Test Legend: Dilatancy: N - None S - Slow R - Rapid | Plasticity: NP - Non-Plastic L - Low M - Medium H - High
Toughness: L - Low M - Medium H - High | Dry Strength: N - None L - Low M - Medium H - High VH - Very High

NOTES: Soil identifications and field tests based on visual-manual methods per ASTM D2488 and using the modified Burmister System

SOIL BORING LOG (continued)

FUSS & O'NEILL

BORING NO.: **B-107**
Page **2** of **2**

Depth/ Elev. (ft)	Sample No. / Interval (ft)	Rec / Pen. (in)	Sample Blows per 6"	Stratum Graphic	USCS Symbol Group	Visual - Manual Identification & Description* (density/consistency, color, Group Name & Symbol, maximum particle size, structure, odor, moisture, optional descriptions, geologic interpretation)	Dilatancy	Toughness	Plasticity	Dry Strength	Remarks*
100						Boring Terminated Without Refusal at 24'					
25											
30											
90											
35											
40											
80											
45											
50											
70											
55											

NOTES:

PROJECT NO.: **20170932.C11** | BORING NO.: **B-107**

NOTES: Soil identifications and field tests based on visual-manual methods per ASTM D2488 and using the modified Burmister System

No.	DATE	DESCRIPTION	DESIGNER	REVIEWER

SEAL

SEAL

STATE OF CONNECTICUT · KRISTEN E. SOLONOWICZ · No. 22072 · LICENSED PROFESSIONAL ENGINEER

SCALE: HORZ.: VERT.:
DATUM: HORZ.: VERT.:
0
GRAPHIC SCALE

FUSS & O'NEILL
146 HARTFORD ROAD
MANCHESTER, CONNECTICUT 06040
860.646.2469
www.fando.com

CITY OF MERIDEN

BORING LOGS IX

BRIDGE REPLACEMENTS AND UTILITY IMPROVEMENTS
BUTLER STREET AND HANOVER STREET
MERIDEN CONNECTICUT

PROJ. No.: 20170932.C11
DATE: FEBRUARY 27, 2024

SA-110

File Path: J:\DWG\P\20170932\C11\Structural\Plan\20170932C11_01_LOCATION PLAN.dwg Layout: SA-110 Plotted: Wed, February 28, 2024 - 2:53 PM User: astripsky
PC3: AUTOCAD PDF (GENERAL DOCUMENTATION).PC3 STB/CTB: FO.STB
LAYER STATE:
MS VIEW:

SOIL BORING LOG

FUSS & O'NEILL

BORING NO.: **B-108**
Page **1** of **2**

Project:	Harbor Brook Channel Improvements	**Project No.:**	20170932.C11
Location:	Meriden CT	**Project Mgr:**	E. Leohmann
Client:	City of Meriden	**Field Eng. Staff:**	B Opp and C Jenkins
Drilling Co.:	General Boring Inc.	**Date Started:**	July 14, 2021
Driller:	J. Casson	**Date Finished:**	July 14, 2021

Elevation: 119 ft. | **Vertical Datum:** NAVD 1988 | **Boring Location:** See Plan | **Coord.:** **N:** 756356.148 **E:** 985026.322 | **Horizontal Datum:** WGS 1984

Item	Casing	Sampler	Core Barrel
Type	HSA	SS	-
Length (ft)	5	2	-
Inside Dia. (in.)	3.25	1.375	-
Hammer Wt. (lb.)	-	140	-
Hammer Fall (in.)	-	30	-

Rig Make & Model: Diedrich D-50
☐ Truck ☐ Tripod ☐ Cat-Head
☐ Rubber Tire ☐ Geoprobe ☐ Winch
☑ Track ☐ Air Track ☐ Roller Bit
☐ Skid ☐ _____ ☑ Cutting Head

Hammer Type
☐ Safety
☐ Doughnut
☑ Automatic
☐ _____

Drilling Fluid
☐ Bentonite
☐ Polymer
☐ Water
☑ None

Drill Rod Size:
Casing Advance
Hollow Stem Augers

Depth/ Elev. (ft)	Sample No. / Interval (ft)	Rec / Pen. (in)	Sample Blows per 6"	Stratum Graphic	USCS Symbol Group	Visual - Manual Identification & Description* (density/consistency, color, Group Name & Symbol, maximum particle size, structure, odor, moisture, optional descriptions, geologic interpretation)	Field Tests: Dilatancy	Toughness	Plasticity	Dry Strength	Remarks
						0.6 **BITUMINOUS CONCRETE**					
	SS-1 1.0'- 3.0'	19/24	9 7 4 4		FILL	Brown, fine SAND, and Silt 2.0	-	-	-	-	
					SC	Brown, fine to medium SAND, little Silt, little Clay 3.0					
	SS-2 3.0'- 5.0'	13/24	3 3 5 5		SC	Loose, brown, fine to medium SAND, little Silt, little Clay, trace Gravel 5.0	-	-	-	-	
5	SS-3 5.0'- 7.0'	4/24	4 6 6 7		SP-SM	Medium dense, brown, fine to medium SAND, little Silt, little Gravel, trace Clay, occasional Cobbles 9.5	-	-	-	-	
110					CL-ML	Medium dense, brown SILT, some Clay, wet					
10	SS-4 10.0'- 12.0'	17/24	5 7 6 6				-	-	-	-	
15	SS-5 15.0'- 17.0'	24/24	4 3 5 7		CL-ML	Medium stiff to stiff, brown CLAY, and Silt, wet	-	-	-	-	
100											
20	SS-6 20.0'- 22.0'	16/24	WOH/18" 2		CL-ML	Very soft, brown CLAY, some Silt, wet	-	-	-	-	WOH = Weight of Hammer

Water Level Data				
Date	Time	Elapsed Time (hr)	Depth in feet: Bottom of Hole	Depth in feet: Water

Minor Constituent Proportions	
And	35 - 50%
Some	20 - 35%
Little	10 - 20%
Trace	<10%

Soil Density	
Very Loose	0 - 4
Loose	4 - 10
Medium Dense	10 - 30
Dense	30 - 50
Very Dense	>50

Soil Consistency	
Very Soft	0 - 2
Soft	2 - 4
Medium Stiff	4 - 8
Stiff	8 - 15
Very Stiff	15 - 30
Hard	>30

Sample Type	
SS	Split Spoon
ST	Shelby Tube
GS	Grab Sample
ET	Extruded Tube
RC	Core Sample

Notes: Groundwater observed at 9.5'.

Boring No.: **B-108**

Field Test Legend: Dilatancy: N - None S - Slow R - Rapid; Toughness: L - Low M - Medium H - High; Plasticity: NP - Non-Plastic L - Low M - Medium H - High; Dry Strength: N - None L - Low M - Medium H - High VH - Very High

NOTES: Soil identifications and field tests based on visual-manual methods per ASTM D2488 and using the modified Burmister System

SOIL BORING LOG
(continued)

FUSS & O'NEILL

BORING NO.: **B-108**
Page **2** of **2**

Depth/ Elev. (ft)	Sample No. / Interval (ft)	Rec / Pen. (in)	Sample Blows per 6"	Stratum Graphic	USCS Symbol Group	Visual - Manual Identification & Description* (density/consistency, color, Group Name & Symbol, maximum particle size, structure, odor, moisture, optional descriptions, geologic interpretation)	Field Tests: Dilatancy	Toughness	Plasticity	Dry Strength	Remarks*
25	SS-7 25.0'- 27.0'	24/24	2 2 4 6		CL-ML	Medium stiff, brown CLAY, and Silt, wet	-	-	-	-	
90											
30	SS-8 30.0'- 32.0'	24/24	WOR/12" 3 4		CL-ML	Soft, brown CLAY, and Silt, wet	-	-	-	-	WOR = Weight of Rods
35	SS-9 35.0'- 37.0'	23/24	WOR/18" WOH		CL-ML	Very soft, brown CLAY, and Silt, wet	-	-	-	-	
80											
40	SS-10 40.0'- 42.0'	12/24	11 20 15 20		SM	Dense, brown, SAND, and Silt, little Clay, trace Gravel, occasional Cobbles, wet 40.0	-	-	-	-	
	SS-11 42.0'- 44.0'	16/24	18 24 23 42		SM	SAA, except very dense. Weathered Rock in tip of sampler 44.0	-	-	-	-	
						44.1 Boring Terminated Without Refusal at 44'					
45											
70											
50											
55											

NOTES:

PROJECT NO.: **20170932.C11** | BORING NO.: **B-108**

NOTES: Soil identifications and field tests based on visual-manual methods per ASTM D2488 and using the modified Burmister System

No.	DATE	DESCRIPTION	DESIGNER	REVIEWER

SEAL

SEAL

STATE OF CONNECTICUT · KRISTEN E. SOLOMONT · No. 22072 · LICENSED PROFESSIONAL ENGINEER

SCALE: HORZ.: VERT.:
DATUM: HORZ.: VERT.:
0
GRAPHIC SCALE

FUSS & O'NEILL
146 HARTFORD ROAD
MANCHESTER, CONNECTICUT 06040
860.646.2469
www.fando.com

CITY OF MERIDEN

BORING LOGS X

BRIDGE REPLACEMENTS AND UTILITY IMPROVEMENTS
BUTLER STREET AND HANOVER STREET
MERIDEN CONNECTICUT

PROJ. No.: 20170932.C11
DATE: FEBRUARY 27, 2024

SA-111

File Path: J:\DWG\P\20170932\C11\Structural\Plan\20170932C11_01_LOCATION PLAN.dwg Layout: SA-111 Plotted: Wed, February 28, 2024 - 2:53 PM User: astirpsky
PC3: AUTOCAD PDF (GENERAL DOCUMENTATION).PC3 STB/CTB: FO.STB
LAYER STATE:
MS VIEW:

RMA ENVIRONMENTAL LLC
20 MAIN STREET, WICKFORD, RHODE ISLAND 02852
ENGINEERS *** SCIENTISTS *** GIS SPECIALISTS

BORING NO. RMA23- 1
SHEET 1 OF 2 1

PROJECT: Harbor Brook Geotechnical Investigation
Butler and Hanover Street, Meriden, CT

PROJECT NO. 23275.00
CHKD. BY

BORING CO. Sage Envirotech
FOREMAN Brett Balyk
ENGINEER Brandon Follansbee

BORING LOCATION SEE EXPLORATION LOCATION PLAN
GROUND SURFACE ELEVATION 120 DATUM See Note 3
DATE START 12/5/2023 DATE END 12/6/2023

SAMPLER: UNLESS OTHERWISE NOTED, SAMPLER CONSISTS OF A 2" SPLIT SPOON DRIVEN USING A 140 lb. HAMMER FALLING 30 in.

CASING: UNLESS OTHERWISE NOTED, CASING DRIVEN USING 300 lb. HAMMER FALLING 24 IN.

CASING SIZE: 3.25" METHOD: Drive and Wash

GROUNDWATER READINGS

DATE	TIME	WATER AT	CASING AT	STABILIZATION TIME
12/6/2023	17:00	8'	-	EOB

DEPTH (ft)	CASING (blr/ft)	SAMPLE NO.	PEN. (in.)/ REC.	DEPTH (FT)	BLOWS/6"				TONS/FT^2 OR KG/CM^2	SAMPLE DESCRIPTION Burmister CLASSIFICATION	REMARKS	STRATUM DESCRIPTION
1		S-1	24 16	0-2	10	9	6	6		M. Dense, moist, reddish brn, F SAND, some Silt, little Gravel (8"), then brn to tan, F SAND, some Silt		
2												
3		S-2	24 3	2-4	4	3	2	3		Loose, moist, brn, F/C SAND, little Gravel and Silt		
4												
5		S-3	24 8	4-6	9	8	8	5		M. Dense, moist, reddish brn, GRAVEL, little F/C Sand and Silt		*EXISTING FILL*
6												
7												
8												
9												
10		S-4	24 3	9-11	5	5	4	6		Loose, wet, brn, TIMBER, trace F/C Sand and Silt		
11												
12												
13												13
14												
15		S-5	24 5	14-16	4	6	8	12		M. Dense, wet, reddish brn, F SAND and SILT, little Gravel and M/C Sand		SM
16												
17												
18												18
19												
20		S-6	24 24	19-21	6	6	4	5		Stiff, wet, reddish brn, SILT, little to some Clay, trace F Sand		ML-CL
21												
22												
23												
24												
25		S-7	24 24	24-26	6	4	4	4		M. Stiff, no change		
26												
27												*GLACIAL DEPOSITS*
28												
29												
30		S-8	24 18	29-31	6	5	4	3		Stiff, no change		ML-CL
31												
32												
33												
34												
35		S-9	24 24	34-36	5	3	3	3		M. Stiff, wet, reddish brn, SILT, some Clay		
36												
37												
38												
39												
40		S-10	24 18	39-41	3	2	1	2		Soft, wet, reddish brn, SILT, little to some Clay		ML-CL
41												
42												

GRANULAR SOILS BLOWS/FT	DENSITY	COHESIVE SOILS BLOWS/FT	DENSITY
0 - 4	V. LOOSE	<2	V.SOFT
4 - 10	LOOSE	2 - 4	SOFT
10 - 30	M.DENSE	4 - 8	M.STIFF
30 - 50	DENSE	8 - 15	STIFF
>50	V.DENSE	15 - 30	V.STIFF
		>30	HARD

REMARKS:
1. Automatic Hammer / Geoprobe Hammer for Casing

BURMISTER CLASSIFICATION	
TRACE	0 - 10%
LITTLE	10 - 20%
SOME	20 - 35%
AND	35 - 50%
PERCENT BY WEIGHT	

NOTES:
1) THE STRATIFICATION LINES REPRESENT THE APPROXIMATE BOUNDARY BETWEEN SOIL TYPES, TRANSITIONS MAY BE GRADUAL.
2) WATER LEVEL READINGS HAVE BEEN MADE IN THE DRILL HOLES AT TIMES AND UNDER CONDITIONS STATED ON THE BORING LOGS. FLUCTUATIONS IN THE LEVEL OF GROUNDWATER MAY OCCUR DUE TO OTHER FACTORS THAN THOSE PRESENT AT THE TIME MEASUREMENTS WERE MADE.
3) THE GROUND SURFACE ELEVATION WAS INTERPOLATED TO THE NEAREST 1/2 FOOT BASED ON A DRAWING TITLED: "CITY OF MERIDEN, TOPOGRAPHIC SURVEY" SHEETS VT-01 AND VT-02, BY FUSS & O'NEILL INC, DATED MARCH 2022.

Fine	F
Medium	M
Coarse	C

BORING NO. RMA23- 1

RMA ENVIRONMENTAL LLC
20 MAIN STREET, WICKFORD, RHODE ISLAND 02852
ENGINEERS *** SCIENTISTS *** GIS SPECIALISTS

BORING NO. RMA23- 1
SHEET 2 OF 2 2

PROJECT: Harbor Brook Geotechnical Investigation
Butler and Hanover Street, Meriden, CT

PROJECT NO. 23275.00
CHKD. BY

DEPTH (ft)	CASING (blr/ft)	SAMPLE NO.	PEN. (in.)/ REC.	DEPTH (FT)	BLOWS/6"				TONS/FT^2 OR KG/CM^2	SAMPLE DESCRIPTION Burmister CLASSIFICATION	REMARKS	STRATUM DESCRIPTION
43												ML-CL
44												44
45		S-11	24 16	44-46	5	7	7	17		M. Dense, wet, reddish brn, F/C SAND, some Silt, little Gravel (6"), then F SAND and SILT, little Gravel		SM
46												
47											2	47
48												
49												
50		S-12	24 16	49-51	51	50	46	55		V. Dense, wet, reddish brn, F/C SAND, some Silt and Gravel		
51											3	
52												
53											3	
54												*GLACIAL TILL*
55		S-13	24 12	54-56	14	19	20	30		Dense, wet, reddish brn, F SAND and SILT, little to trace M/C Sand and Gravel	4	
56												SM
57												
58												
59												
60												
61												
62		S-14	24 6	61-63	72	106	34	22		V. Dense, wet, reddish brn, COBBLES (12"), then F/C Sand and Silt		
63												
64												
65											5	65
66												**END OF BORING**
67												
68												Boring terminated.
69												Backfilled with tailings and sand.
70												Asphalt cold patched.
71												
72												
73												
74												
75												
76												
77												
78												
79												
80												
81												
82												
83												
84												
85												
86												
87												
88												
89												
90												
91												
92												

GRANULAR SOILS BLOWS/FT	DENSITY	COHESIVE SOILS BLOWS/FT	DENSITY
0 - 4	V. LOOSE	<2	V.SOFT
4 - 10	LOOSE	2 - 4	SOFT
10 - 30	M.DENSE	4 - 8	M.STIFF
30 - 50	DENSE	8 - 15	STIFF
>50	V.DENSE	15 - 30	V.STIFF
		>30	HARD

REMARKS:
2. Significant density change at 47'
3. Boulder 51' and 53'. Casing refusal at 53'
4. Rollerbit ahead of casing for split spoon sample S-13 and S-14
5. Rollerbit advanced to apparent bedrock.

BURMISTER CLASSIFICATION	
TRACE	0 - 10%
LITTLE	10 - 20%
SOME	20 - 35%
AND	35 - 50%
PERCENT BY WEIGHT	

NOTES:
1) THE STRATIFICATION LINES REPRESENT THE APPROXIMATE BOUNDARY BETWEEN SOIL TYPES, TRANSITIONS MAY BE GRADUAL.
2) WATER LEVEL READINGS HAVE BEEN MADE IN THE DRILL HOLES AT TIMES AND UNDER CONDITIONS STATED ON THE BORING LOGS. FLUCTUATIONS IN THE LEVEL OF GROUNDWATER MAY OCCUR DUE TO OTHER FACTORS THAN THOSE PRESENT AT THE TIME MEASUREMENTS WERE MADE.
3) THE GROUND SURFACE ELEVATION WAS INTERPOLATED TO THE NEAREST 1/2 FOOT BASED ON A DRAWING TITLED: "CITY OF MERIDEN, TOPOGRAPHIC SURVEY" SHEETS VT-01 AND VT-02, BY FUSS & O'NEILL INC, DATED MARCH 2022.

Fine	F
Medium	M
Coarse	C

BORING NO. RMA23- 1

No.	DATE	DESCRIPTION	DESIGNER	REVIEWER

SEAL

SEAL

SCALE:
HORZ.:
VERT.:
DATUM:
HORZ.:
VERT.:
0
GRAPHIC SCALE

FUSS & O'NEILL
146 HARTFORD ROAD
MANCHESTER, CONNECTICUT 06040
860.646.2469
www.fando.com

CITY OF MERIDEN

BORING LOGS XI

BRIDGE REPLACEMENTS AND UTILITY IMPROVEMENTS
BUTLER STREET AND HANOVER STREET
MERIDEN CONNECTICUT

PROJ. No.: 20170932.C11
DATE: FEBRUARY 27, 2024

SA-112

File Path: J:\DWG\P2017\0932\C11\Structural\Plan\20170932C11_01_LOCATION PLAN.dwg Layout: SA-112 Plotted: Wed, February 28, 2024 - 2:53 PM User: astrpsky
PC3: AUTOCAD PDF (GENERAL DOCUMENTATION).PC3 STB/CTB: FO.STB
LAYER STATE:
MS VIEW:

RMA ENVIRONMENTAL LLC
20 MAIN STREET, WICKFORD, RHODE ISLAND 02852
ENGINEERS *** SCIENTISTS *** GIS SPECIALISTS

BORING NO. RMA23- 2
SHEET 1 OF 2 1

PROJECT: Harbor Brook Geotechnical Investigation
Butler and Hanover Street, Meriden, CT

PROJECT NO. 23275.00
CHKD. BY

BORING CO. Sage Envirotech
FOREMAN Brett Balyk
ENGINEER Brandon Follansbee

BORING LOCATION SEE EXPLORATION LOCATION PLAN
GROUND SURFACE ELEVATION 121 DATUM See Note 3
DATE START 12/7/2023 DATE END 12/8/2023

SAMPLER: UNLESS OTHERWISE NOTED, SAMPLER CONSISTS OF A 2" SPLIT SPOON DRIVEN USING A 140 lb. HAMMER FALLING 30 in.

CASING: UNLESS OTHERWISE NOTED, CASING DRIVEN USING 300 lb. HAMMER FALLING 24 IN.

CASING SIZE: 3.25" METHOD: Drive and Wash

GROUNDWATER READINGS

DATE	TIME	WATER AT	CASING AT	STABILIZATION TIME
12/8/2023	13:00	11'	-	EOB

DEPTH (ft)	CASING (blf/ft)	SAMPLE NO.	PEN. (in.)/ REC.	DEPTH (FT)	BLOWS/6"				TONS/FT² OR KG/CM²	SAMPLE DESCRIPTION Burmister / CLASSIFICATION	REMARKS	STRATUM DESCRIPTION
1		S-1	24 20	0-2	2	9	9	11		M. Dense, moist, brn, TOPSOIL (6"), then reddish brn, F/C SAND and SILT, little Gravel		
2												
3		S-2	24 16	2-4	9	10	10	12		M. Dense, moist, reddish brn, F SAND and SILT (8"), then grey, F/C SAND, little to some Silt, little Gravel		
4												
5		S-3	24 20	4-6	36	24	8	11		Dense, moist, black to grey, F/C SAND, some Silt and Urban Debris (coal, brick, timber, glass)		***EXISTING FILL***
6												
7		S-4	24 16	6-8	3	5	4	3		Loose, moist, brn to reddish brn, F/M SAND and SILT, little Gravel trace Brick		
8												8
9		S-5	24 24	8-10	6	7	8	10		M. Dense, moist, reddish brn, F/C SAND and SILT, some Gravel		
10												
11		S-6	24 8	10-12	7	8	7	5		M. Dense, no change		SM
12												
13												13
14												
15		S-7	24 20	14-16	13	11	10	10		M. Dense, wet, reddish brn, SILT, trace Clay and F Sand		
16												
17												ML
18												
19												19
20		S-8	24 20	19-21	7	5	6	7		Stiff, wet, reddish brn, SILT, little Clay, trace F Sand		
21												
22												ML-CL
23												
24												
25		S-9	24 18	24-26	4	3	1	3		Soft, wet, reddish brn, SILT, little to some Clay		
26												
27												
28												***GLACIAL DEPOSITS***
29												
30										Shelby Tube Attempted - No Recovery		ML-CL
31												
32												
33												
34												
35		S-10	24 24	34-36	5	4	2	4		M. Stiff, wet, reddish brn, SILT, little Clay		
36												
37												
38												
39												
40												ML-CL
41												
42												

GRANULAR SOILS BLOWS/FT	DENSITY	COHESIVE SOILS BLOWS/FT	DENSITY
0 - 4	V. LOOSE	<2	V.SOFT
4 - 10	LOOSE	2 - 4	SOFT
10 - 30	M.DENSE	4 - 8	M.STIFF
30 - 50	DENSE	8 - 15	STIFF
>50	V.DENSE	15 - 30	V.STIFF
		>30	HARD

REMARKS:
1. Automatic Hammer / Geoprobe Hammer for Casing

BURMISTER CLASSIFICATION	
TRACE	0 - 10%
LITTLE	10 - 20%
SOME	20 - 35%
AND	35 - 50%
PERCENT BY WEIGHT	

NOTES:
1) THE STRATIFICATION LINES REPRESENT THE APPROXIMATE BOUNDARY BETWEEN SOIL TYPES, TRANSITIONS MAY BE GRADUAL.
2) WATER LEVEL READINGS HAVE BEEN MADE IN THE DRILL HOLES AT TIMES AND UNDER CONDITIONS STATED ON THE BORING LOGS. FLUCTUATIONS IN THE LEVEL OF GROUNDWATER MAY OCCUR DUE TO OTHER FACTORS THAN THOSE PRESENT AT THE TIME MEASUREMENTS WERE MADE.
3) THE GROUND SURFACE ELEVATION WAS INTERPOLATED TO THE NEAREST 1/2 FOOT BASED ON A DRAWING TITLED: "CITY OF MERIDEN, TOPOGRAPHIC SURVEY" SHEETS VT-01 AND VT-02, BY FUSS & O'NEILL INC, DATED MARCH 2022.

Fine	F
Medium	M
Coarse	C

BORING NO. RMA23- 2

RMA ENVIRONMENTAL LLC
20 MAIN STREET, WICKFORD, RHODE ISLAND 02852
ENGINEERS *** SCIENTISTS *** GIS SPECIALISTS

BORING NO. RMA23- 2
SHEET 2 OF 2 2

PROJECT: Harbor Brook Geotechnical Investigation
Butler and Hanover Street, Meriden, CT

PROJECT NO. 23275.00
CHKD. BY

DEPTH (ft)	CASING (blf/ft)	SAMPLE NO.	PEN. (in.)/ REC.	DEPTH (FT)	BLOWS/6"				TONS/FT² OR KG/CM²	SAMPLE DESCRIPTION Burmister / CLASSIFICATION	REMARKS	STRATUM DESCRIPTION
43												ML-CL
44												44
45		S-11	24 15	44-46	8	9	7	9		M. Dense, wet, reddish brn, F/C SAND, some Gravel, little Silt		
46												SW-SM
47												
48												
49												
50												
51											2	51
52												
53												
54												
55		S-12	24 20	54-56	20	48	55	30		V. Dense, wet, reddish brn, F/M SAND, some Silt, little Gravel		
56												
57												SM
58												
59											3	***GLACIAL TILL***
60												
61												
62												
63												
64		S-13	4 4	64-66	150/4"					V. Dense, wet, reddish brn, Weathered ROCK	4	*Top of Bedrock* 64
65										0-1' 4:55 ARKOSE	5	
66										1-2' 2:57		
67									RQD*	2-3' 3:30 Soft to v. soft, slightly weathered, reddish brn, coarse grained, moderately fractured*		ARKOSE
68		C-1	60 32	64.5-69.5					7%	3-4' 3:04		
69										4-5' 5:04		
70										0-1' 5:19 ARKOSE		
71										1-2' 3:02		
72		C-2	60 60	69.5-74.5					25%	2-3' 2:45 Soft, fresh to slightly weathered, reddish brn, fine grained to amorphous, moderately fractured*		ARKOSE
73										3-4' 1:53		
74										4-5' 1:55		74.5
75												**END OF BORING**
76												
77												Boring terminated.
78												Backfilled with tailings and sand.
79												
80												
81												
82												
83												
84												
85												
86												
87												
88												
89												
90												
91												
92												

GRANULAR SOILS BLOWS/FT	DENSITY	COHESIVE SOILS BLOWS/FT	DENSITY
0 - 4	V. LOOSE	<2	V.SOFT
4 - 10	LOOSE	2 - 4	SOFT
10 - 30	M.DENSE	4 - 8	M.STIFF
30 - 50	DENSE	8 - 15	STIFF
>50	V.DENSE	15 - 30	V.STIFF
		>30	HARD

REMARKS:
2. Significant density change at 51'
3. Casing advanced to 59' (very difficult) - rollerbit ahead to 64' for S-13
4. Rollerbit advanced to 64.5' after S-13, and casing set at 64' for rock core
5. BX Core Barrel
* Typical run mechanical fractures noted and included in RQD. Interpretation of mechanical fractures is under review

BURMISTER CLASSIFICATION	
TRACE	0 - 10%
LITTLE	10 - 20%
SOME	20 - 35%
AND	35 - 50%
PERCENT BY WEIGHT	

NOTES:
1) THE STRATIFICATION LINES REPRESENT THE APPROXIMATE BOUNDARY BETWEEN SOIL TYPES, TRANSITIONS MAY BE GRADUAL.
2) WATER LEVEL READINGS HAVE BEEN MADE IN THE DRILL HOLES AT TIMES AND UNDER CONDITIONS STATED ON THE BORING LOGS. FLUCTUATIONS IN THE LEVEL OF GROUNDWATER MAY OCCUR DUE TO OTHER FACTORS THAN THOSE PRESENT AT THE TIME MEASUREMENTS WERE MADE.
3) THE GROUND SURFACE ELEVATION WAS INTERPOLATED TO THE NEAREST 1/2 FOOT BASED ON A DRAWING TITLED: "CITY OF MERIDEN, TOPOGRAPHIC SURVEY" SHEETS VT-01 AND VT-02, BY FUSS & O'NEILL INC, DATED MARCH 2022.

Fine	F
Medium	M
Coarse	C

BORING NO. RMA23- 2

No.	DATE	DESCRIPTION	DESIGNER	REVIEWER

SEAL

SEAL

SCALE:
HORZ.:
VERT.:
DATUM:
HORZ.:
VERT.:
0
GRAPHIC SCALE

FUSS & O'NEILL
146 HARTFORD ROAD
MANCHESTER, CONNECTICUT 06040
860.646.2469
www.fando.com

CITY OF MERIDEN

BORING LOGS XII

BRIDGE REPLACEMENTS AND UTILITY IMPROVEMENTS
BUTLER STREET AND HANOVER STREET
MERIDEN CONNECTICUT

PROJ. No.: 20170932.C11
DATE: FEBRUARY 27, 2024

SA-113

File Path: J:\DWG\P\20170932\C11\Structural\Plan\20170932C11_01_LOCATION PLAN.dwg Layout: SA-113 Plotted: Wed, February 28, 2024 - 2:53 PM User: astripsky
PC3: AUTOCAD PDF (GENERAL DOCUMENTATION).PC3 STB/CTB: FO.STB
LAYER STATE:
MS VIEW:

RMA ENVIRONMENTAL LLC

20 MAIN STREET, WICKFORD, RHODE ISLAND 02852

ENGINEERS *** SCIENTISTS *** GIS SPECIALISTS

BORING NO. RMA23- 3A

SHEET 1 OF 1 1

PROJECT: Harbor Brook Geotechnical Investigation
Butler and Hanover Street, Meriden, CT

PROJECT NO. 23275.00
CHKD. BY

BORING CO. Sage Envirotech
FOREMAN Brett Balyk
ENGINEER Brandon Follansbee

BORING LOCATION SEE EXPLORATION LOCATION PLAN
GROUND SURFACE ELEVATION 124 DATUM See Note 3
DATE START 12/11/2023 DATE END 12/11/2023

SAMPLER: UNLESS OTHERWISE NOTED, SAMPLER CONSISTS OF A 2" SPLIT SPOON DRIVEN USING A 140 lb. HAMMER FALLING 30 in.

CASING: UNLESS OTHERWISE NOTED, CASING DRIVEN USING 300 lb. HAMMER FALLING 24 IN.

CASING SIZE: 3.25" METHOD: Drive and Wash

GROUNDWATER READINGS

DATE	TIME	WATER AT	CASING AT	STABILIZATION TIME
12/11/2023	10:00	10'	-	EOB

DEPTH (ft)	CASING (blr/ft)	SAMPLE NO.	PEN. (in.)/ REC.	DEPTH (FT)	BLOWS/6"				TONS/FT^2 OR KG/CM^2	SAMPLE DESCRIPTION: Burmister CLASSIFICATION	REMARKS	STRATUM DESCRIPTION
1		S-1	24 24	0-2	16	12	6	5		M. Dense, wet, brn, F/M SAND and SILT, little Gravel, trace wood and brick		
2												
3		S-2	24 18	2-4	4	5	7	9		No change		
4												
5		S-3	24 18	4-6	7	7	6	6		M. Dense, wet, brn, F/M SAND and SILT, little Gravel, trace asphalt		***EXISTING FILL***
6												
7		S-4	24 16	6-8	2	3	5	4		Loose, wet, brn, F/M SAND and SILT, little Gravel, trace coal		
8												
9		S-5	24 12	8-10	2	3	5	8		Loose, wet, brn, F/C SAND, some Silt and Brick		
10												
11		S-6	24 6	10-12	2	2	3	4		Loose, wet, brn, F/C SAND and GRAVEL, some Silt		
12												
13												
14		S-7	24 0	13-15	2	1	0	1		V. Loose, wet, no recovery		
15											2	Refusal - Obstruction 15
16											3	**END OF BORING**
17												
18												Boring terminated.
19												Backfilled with tailings and sand.
20												Asphalt cold patched.
21												
22												
23												
24												
25												
26												
27												
28												
29												
30												
31												
32												
33												
34												
35												
36												
37												
38												
39												
40												
41												
42												

GRANULAR SOILS BLOWS/FT	DENSITY	COHESIVE SOILS BLOWS/FT	DENSITY
0 - 4	V. LOOSE	<2	V.SOFT
4 - 10	LOOSE	2 - 4	SOFT
10 - 30	M.DENSE	4 - 8	M.STIFF
30 - 50	DENSE	8 - 15	STIFF
>50	V.DENSE	15 - 30	V.STIFF
		>30	HARD

REMARKS:
1. Automatic Hammer / Geoprobe Hammer for Casing
2. Casing refusal at 15'. Stepped off 4' - no change
3. Relocated to location RMA23-3B

BURMISTER CLASSIFICATION	
TRACE	0 - 10%
LITTLE	10 - 20%
SOME	20 - 35%
AND	35 - 50%
PERCENT BY WEIGHT	
Fine	F
Medium	M
Coarse	C

NOTES:
1) THE STRATIFICATION LINES REPRESENT THE APPROXIMATE BOUNDARY BETWEEN SOIL TYPES, TRANSITIONS MAY BE GRADUAL.
2) WATER LEVEL READINGS HAVE BEEN MADE IN THE DRILL HOLES AT TIMES AND UNDER CONDITIONS STATED ON THE BORING LOGS. FLUCTUATIONS IN THE LEVEL OF GROUNDWATER MAY OCCUR DUE TO OTHER FACTORS THAN THOSE PRESENT AT THE TIME MEASUREMENTS WERE MADE.
3) THE GROUND SURFACE ELEVATION WAS INTERPOLATED TO THE NEAREST 1/2 FOOT BASED ON A DRAWING TITLED: "CITY OF MERIDEN, TOPOGRAPHIC SURVEY" SHEETS VT-01 AND VT-02, BY FUSS & O'NEILL INC, DATED MARCH 2022.

BORING NO. RMA23- 3A

RMA ENVIRONMENTAL LLC

20 MAIN STREET, WICKFORD, RHODE ISLAND 02852

ENGINEERS *** SCIENTISTS *** GIS SPECIALISTS

BORING NO. RMA23- 3B

SHEET 1 OF 2 1

PROJECT: Harbor Brook Geotechnical Investigation
Butler and Hanover Street, Meriden, CT

PROJECT NO. 23275.00
CHKD. BY

BORING CO. Sage Envirotech
FOREMAN Brett Balyk
ENGINEER Brandon Follansbee

BORING LOCATION SEE EXPLORATION LOCATION PLAN
GROUND SURFACE ELEVATION 122 DATUM See Note 3
DATE START 12/11/2023 DATE END 12/12/2023

SAMPLER: UNLESS OTHERWISE NOTED, SAMPLER CONSISTS OF A 2" SPLIT SPOON DRIVEN USING A 140 lb. HAMMER FALLING 30 in.

CASING: UNLESS OTHERWISE NOTED, CASING DRIVEN USING 300 lb. HAMMER FALLING 24 IN.

CASING SIZE: 3.25" METHOD: Drive and Wash

GROUNDWATER READINGS

DATE	TIME	WATER AT	CASING AT	STABILIZATION TIME
12/12/2023	17:00	9'	-	EOB

DEPTH (ft)	CASING (blr/ft)	SAMPLE NO.	PEN. (in.)/ REC.	DEPTH (FT)	BLOWS/6"				TONS/FT^2 OR KG/CM^2	SAMPLE DESCRIPTION: Burmister CLASSIFICATION	REMARKS	STRATUM DESCRIPTION
1												
2												
3												
4												
5												
6												***EXISTING FILL***
7												
8												
9												
10												
11												
12												
13												
14											2	*transition indiscernible* 14
15		S-1	24 20	14-16	5	6	7	11		Stiff, wet, reddish brn, SILT, little Clay		
16												
17												
18												
19												
20		S-2	24 24	19-21	7	7	7	8		Stiff, wet, reddish brn, SILT, little Clay, trace F Sand		
21												ML-CL
22												
23												
24												
25										Shelby Tube Extraction		
26												
27												***GLACIAL DEPOSITS***
28												
29												
30		S-3	24 20	29-31	5	6	7	7		Stiff, wet, reddish brn, SILT, some Clay		ML-CL
31												
32												
33												
34												
35		S-4	24 24	34-36	4	4	5	7		Stiff, wet, reddish brn, SILT, litle to some Clay		
36												
37												
38												
39												
40		S-5	24 24	39-41	5	3	1	2		Soft, wet, reddish brn, SILT, little Clay		ML-CL
41												
42												

GRANULAR SOILS BLOWS/FT	DENSITY	COHESIVE SOILS BLOWS/FT	DENSITY
0 - 4	V. LOOSE	<2	V.SOFT
4 - 10	LOOSE	2 - 4	SOFT
10 - 30	M.DENSE	4 - 8	M.STIFF
30 - 50	DENSE	8 - 15	STIFF
>50	V.DENSE	15 - 30	V.STIFF
		>30	HARD

REMARKS:
1. Automatic Hammer / Geoprobe Hammer for Casing
2. Begin sampling at 14' due to time constraints. Transition from Existing Fill to natural strata indiscernible in wash.

BURMISTER CLASSIFICATION	
TRACE	0 - 10%
LITTLE	10 - 20%
SOME	20 - 35%
AND	35 - 50%
PERCENT BY WEIGHT	
Fine	F
Medium	M
Coarse	C

NOTES:
1) THE STRATIFICATION LINES REPRESENT THE APPROXIMATE BOUNDARY BETWEEN SOIL TYPES, TRANSITIONS MAY BE GRADUAL.
2) WATER LEVEL READINGS HAVE BEEN MADE IN THE DRILL HOLES AT TIMES AND UNDER CONDITIONS STATED ON THE BORING LOGS. FLUCTUATIONS IN THE LEVEL OF GROUNDWATER MAY OCCUR DUE TO OTHER FACTORS THAN THOSE PRESENT AT THE TIME MEASUREMENTS WERE MADE.
3) THE GROUND SURFACE ELEVATION WAS INTERPOLATED TO THE NEAREST 1/2 FOOT BASED ON A DRAWING TITLED: "CITY OF MERIDEN, TOPOGRAPHIC SURVEY" SHEETS VT-01 AND VT-02, BY FUSS & O'NEILL INC, DATED MARCH 2022.

BORING NO. RMA23- 3B

No.	DATE	DESCRIPTION	DESIGNER	REVIEWER

SEAL

STATE OF CONNECTICUT — JAMES E. ROSSEMAN — 33142 — LICENSED PROFESSIONAL ENGINEER

SEAL

SCALE:
HORZ.:
VERT.:
DATUM:
HORZ.:
VERT.:
0
GRAPHIC SCALE

FUSS & O'NEILL
146 HARTFORD ROAD
MANCHESTER, CONNECTICUT 06040
860.646.2469
www.fando.com

CITY OF MERIDEN

BORING LOGS XIII

BRIDGE REPLACEMENTS AND UTILITY IMPROVEMENTS
BUTLER STREET AND HANOVER STREET
MERIDEN CONNECTICUT

PROJ. No.: 20170932.C11
DATE: FEBRUARY 27, 2024

SA-114

File Path: J:\DWG\P2017\0932\C11\Structural\Plan\20170932C11_01_LOCATION PLAN.dwg Layout: SA-114 Plotted: Wed, February 28, 2024 - 2:53 PM User: astripsky
PC3: AUTOCAD PDF (GENERAL DOCUMENTATION).PC3 STB/CTB: FO.STB
LAYER STATE:
MS VIEW:

RMA ENVIRONMENTAL LLC
20 MAIN STREET, WICKFORD, RHODE ISLAND 02852
ENGINEERS *** SCIENTISTS *** GIS SPECIALISTS

BORING NO. RMA23- 3B
SHEET 2 OF 2 2

PROJECT: Harbor Brook Geotechnical Investigation
Butler and Hanover Street, Meriden, CT

PROJECT NO. 23275.00
CHKD. BY

DEPTH (ft)	CASING (b/ft)	SAMPLE NO.	PEN. (in.)/ REC.	DEPTH (FT)	BLOWS/6"				TONS/FT^2 OR KG/CM^2	SAMPLE DESCRIPTION Burmister	CLASSIFICATION	REMARKS	STRATUM DESCRIPTION
43													ML-CL
44													
45		S-6	24 20	44-46	5	6	14	9		Stiff, wet, reddish brn, SILT, little Clay to 45', then M. Dense, wet, reddish brn, F SAND and SILT, some Gravel			45
46													SM
47													
48													49
49													SP-SM
50		S-7	24 12	49-51	22	12	21	12		Dense, wet, reddish brn, F/M SAND, some Gravel, little Silt and C Sand			
51													
52												3	
53													***GLACIAL TILL***
54													
55		S-8	24 18	54-56	15	25	15	13		Dense, wet, reddish brn, F/M SAND and SILT, some Gravel			
56												4	SM
57													*Top of Bedrock* 57
58		S-9	1 1	58-60	100/0"					V. Dense, wet, reddish brn, ARKOSE in tip		5	
59										0-1' 3:37	ARKOSE		
60									**RQD***	1-2' 4:36	Soft, fresh to slightly weathered, reddish brn, fine grained to amorphous, moderately fractured*		
61		C-1	60 52	58-63					15%	2-3' 6:01			
62										3-4' 7:38			
63										4-5' 7:27			ARKOSE
64										0-1' 3:27	ARKOSE		
65		C-2	60 59	63-68					88%	1-2' 2:37	Soft, sound, fresh to slightly weathered, reddish brn, fine grained, slightly fractured*		
66										2-3' 3:11			
67										3-4' 3:21			
68										4-5' 3:15			68
69													**END OF BORING**
70													
71													Boring terminated.
72													Backfilled with tailings and sand.
73													Asphalt cold patched.
74													
75													
76													
77													
78													
79													
80													
81													
82													
83													
84													
85													
86													
87													
88													
89													
90													
91													
92													

GRANULAR SOILS BLOWS/FT	DENSITY	COHESIVE SOILS BLOWS/FT	DENSITY
0 - 4	V. LOOSE	<2	V.SOFT
4 - 10	LOOSE	2 - 4	SOFT
10 - 30	M.DENSE	4 - 8	M.STIFF
30 - 50	DENSE	8 - 15	STIFF
>50	V.DENSE	15 - 30	V.STIFF
		>30	HARD

REMARKS:
3. Casing refusal at 52.5'. Rollerbit ahead to 54' for S-8
4. Casing refusal at 55.5'. Apparent bedrock encountered at 57' with rollerbit
5. Roller bit advanced to 58', Split spoon, then rock core advanced
6. BX Core Barrel
* Typical run mechanical fractures noted and included in RQD. Interpretation of mechanical fractures is under review

BURMISTER CLASSIFICATION	
TRACE	0 - 10%
LITTLE	10 - 20%
SOME	20 - 35%
AND	35 - 50%
PERCENT BY WEIGHT	

NOTES:
1) THE STRATIFICATION LINES REPRESENT THE APPROXIMATE BOUNDARY BETWEEN SOIL TYPES, TRANSITIONS MAY BE GRADUAL.
2) WATER LEVEL READINGS HAVE BEEN MADE IN THE DRILL HOLES AT TIMES AND UNDER CONDITIONS STATED ON THE BORING LOGS. FLUCTUATIONS IN THE LEVEL OF GROUNDWATER MAY OCCUR DUE TO OTHER FACTORS THAN THOSE PRESENT AT THE TIME MEASUREMENTS WERE MADE.
3) THE GROUND SURFACE ELEVATION WAS INTERPOLATED TO THE NEAREST 1/2 FOOT BASED ON A DRAWING TITLED: "CITY OF MERIDEN, TOPOGRAPHIC SURVEY" SHEETS VT-01 AND VT-02, BY FUSS & O'NEILL INC, DATED MARCH 2022.

Fine	F
Medium	M
Coarse	C

BORING NO. RMA23- 3B

RMA ENVIRONMENTAL LLC
20 MAIN STREET, WICKFORD, RHODE ISLAND 02852
ENGINEERS *** SCIENTISTS *** GIS SPECIALISTS

BORING NO. RMA23- 4
SHEET 1 OF 2 1

PROJECT: Harbor Brook Geotechnical Investigation
Butler and Hanover Street, Meriden, CT

PROJECT NO. 23275.00
CHKD. BY

BORING CO. Sage Envirotech
FOREMAN Brett Balyk
ENGINEER Brandon Follansbee

BORING LOCATION SEE EXPLORATION LOCATION PLAN
GROUND SURFACE ELEVATION 124 DATUM See Note 3
DATE START 12/13/2023 DATE END 12/13/2023

SAMPLER: UNLESS OTHERWISE NOTED, SAMPLER CONSISTS OF A 2" SPLIT SPOON DRIVEN USING A 140 lb. HAMMER FALLING 30 in.
CASING: UNLESS OTHERWISE NOTED, CASING DRIVEN USING 300 lb. HAMMER FALLING 24 IN.
CASING SIZE: 3.25" METHOD: Drive and Wash

GROUNDWATER READINGS DATE	TIME	WATER AT	CASING AT	STABILIZATION TIME
12/13/2023	15:00	9'	-	EOB

DEPTH (ft)	CASING (b/ft)	SAMPLE NO.	PEN. (in.)/ REC.	DEPTH (FT)	BLOWS/6"				TONS/FT^2 OR KG/CM^2	SAMPLE DESCRIPTION Burmister	CLASSIFICATION	REMARKS	STRATUM DESCRIPTION
1		S-1	24 20	0-2	10	10	11	14		M. Dense, moist, reddish brn, F/M SAND and SILT, little Gravel, trace Brick			
2													
3		S-2	24 20	2-4	9	13	14	14		M. Dense, moist, brn, F/M SAND and SILT, little Gravel and Brick, trace Asphalt			
4													
5		S-3	24 16	4-6	10	8	6	8		M. Dense, moist, brn, F/M SAND and SILT, little Gravel (8"), then grey to black, F/C SAND, little to some Silt and Gravel			
6													***EXISTING FILL***
7		S-4	24 10	6-8	5	4	1	1		Loose, moist, tan, F/M SAND, some Silt, trace to little Gravel			
8													
9												2	
10		S-5	24 16	9-11	1	1	1	1		V. Loose, wet, reddish brn, F SAND and SILT			
11													
12													
13													
14													14
15		S-6	24 10	14-16	8	4	4	6		Loose, wet, reddish brn, F/C SAND and GRAVEL, some Silt			
16													SM
17													17
18													
19													
20		S-7	24 16	19-21	4	4	4	5		Stiff, wet, reddish brn, SILT, little Clay			
21													ML-CL
22													
23													
24													
25		S-8	24 24	24-26	2	2	4	4		M. Stiff, wet, reddish brn, SILT, little Clay			
26													ML-CL
27													
28													
29													
30													***GLACIAL DEPOSITS***
31													
32													
33													
34													
35		S-9	24 24	34-36	2	2	3	3		M. Stiff, wet, reddish brn, SILT, little to some Clay			
36													ML-CL
37													
38													
39													
40													
41													
42													

GRANULAR SOILS BLOWS/FT	DENSITY	COHESIVE SOILS BLOWS/FT	DENSITY
0 - 4	V. LOOSE	<2	V.SOFT
4 - 10	LOOSE	2 - 4	SOFT
10 - 30	M.DENSE	4 - 8	M.STIFF
30 - 50	DENSE	8 - 15	STIFF
>50	V.DENSE	15 - 30	V.STIFF
		>30	HARD

REMARKS:
1. Automatic Hammer / Geoprobe Hammer for Casing
2. Refusal during 8-10 split spoon (20/0"). Step off and redrive casing to 9'

BURMISTER CLASSIFICATION	
TRACE	0 - 10%
LITTLE	10 - 20%
SOME	20 - 35%
AND	35 - 50%
PERCENT BY WEIGHT	

NOTES:
1) THE STRATIFICATION LINES REPRESENT THE APPROXIMATE BOUNDARY BETWEEN SOIL TYPES, TRANSITIONS MAY BE GRADUAL.
2) WATER LEVEL READINGS HAVE BEEN MADE IN THE DRILL HOLES AT TIMES AND UNDER CONDITIONS STATED ON THE BORING LOGS. FLUCTUATIONS IN THE LEVEL OF GROUNDWATER MAY OCCUR DUE TO OTHER FACTORS THAN THOSE PRESENT AT THE TIME MEASUREMENTS WERE MADE.
3) THE GROUND SURFACE ELEVATION WAS INTERPOLATED TO THE NEAREST 1/2 FOOT BASED ON A DRAWING TITLED: "CITY OF MERIDEN, TOPOGRAPHIC SURVEY" SHEETS VT-01 AND VT-02, BY FUSS & O'NEILL INC, DATED MARCH 2022.

Fine	F
Medium	M
Coarse	C

BORING NO. RMA23- 4

No.	DATE	DESCRIPTION	DESIGNER	REVIEWER

SEAL: STATE OF CONNECTICUT, JOSHUA E. ROSEMAN, 33142, LICENSED PROFESSIONAL ENGINEER

SEAL

SCALE: HORZ.: VERT.:
DATUM: HORZ.: VERT.:
0
GRAPHIC SCALE

FUSS & O'NEILL
146 HARTFORD ROAD
MANCHESTER, CONNECTICUT 06040
860.646.2469
www.fando.com

CITY OF MERIDEN
BORING LOGS XIV
BRIDGE REPLACEMENTS AND UTILITY IMPROVEMENTS
BUTLER STREET AND HANOVER STREET
MERIDEN CONNECTICUT

PROJ. No.: 20170932.C11
DATE: FEBRUARY 27, 2024

SA-115

File Path: J:\DWG\P\20170932\C11\Structural\Plan\20170932C11_01_LOCATION PLAN.dwg Layout: SA-115 Plotted: Wed, February 28, 2024 - 2:54 PM User: astripsky PC3: AUTOCAD PDF (GENERAL DOCUMENTATION).PC3 STB/CTB: FO.STB
LAYER STATE:
MS VIEW:

RMA ENVIRONMENTAL LLC

20 MAIN STREET, WICKFORD, RHODE ISLAND 02852

ENGINEERS *** SCIENTISTS *** GIS SPECIALISTS

BORING NO. **RMA23- 4**

SHEET 2 OF 2 2

PROJECT: Harbor Brook Geotechnical Investigation
Butler and Hanover Street, Meriden, CT

PROJECT NO. 23275.00

CHKD. BY

DEPTH (ft)	CASING (blows)	SAMPLE NO.	PEN. (in.)/ REC.	DEPTH (FT)	BLOWS/6"			TONS/FT^2 OR KG/CM^2	SAMPLE DESCRIPTION: Burmister	CLASSIFICATION	REMARKS	STRATUM DESCRIPTION
43											3	ML-CL 43
44												
45		S-10	4 4	44-46	100/4"				V. Dense, wet, reddish brn, F SAND and SILT, some Gravel BOULDER refusal		4	SM
46												46
47												
48												
49												
50											5	***GLACIAL TILL***
51											6	SM
52												
53												
54											7	54
55												**END OF BORING**
56												
57												Boring terminated.
58												Backfilled with tailings and sand.
59												Asphalt cold patched.
60												
61												
62												
63												
64												
65												
66												
67												
68												
69												
70												
71												
72												
73												
74												
75												
76												
77												
78												
79												
80												
81												
82												
83												
84												
85												
86												
87												
88												
89												
90												
91												
92												

GRANULAR SOILS		COHESIVE SOILS	
BLOWS/FT	DENSITY	BLOWS/FT	DENSITY
0 - 4	V. LOOSE	<2	V.SOFT
4 - 10	LOOSE	2 - 4	SOFT
10 - 30	M.DENSE	4 - 8	M.STIFF
30 - 50	DENSE	8 - 15	STIFF
>50	V.DENSE	15 - 30	V.STIFF
		>30	HARD

REMARKS:

3. Significant density change at 43'
4. Practical S/S refusal at 44.5'. Cored through 18" boulder to 46'. Advanced barrel to 49', noting several smaller cobbles/boulders.
5. Attempted S/S at 49' - collapse encountered.
6. Due to time constraints and boulder refusal, 1" point driven to refusal
7. 1" point refusal at 54'

BURMISTER CLASSIFICATION	
TRACE	0 - 10%
LITTLE	10 - 20%
SOME	20 - 35%
AND	35 - 50%
PERCENT BY WEIGHT	

NOTES:
1) THE STRATIFICATION LINES REPRESENT THE APPROXIMATE BOUNDARY BETWEEN SOIL TYPES, TRANSITIONS MAY BE GRADUAL.
2) WATER LEVEL READINGS HAVE BEEN MADE IN THE DRILL HOLES AT TIMES AND UNDER CONDITIONS STATED ON THE BORING LOGS. FLUCTUATIONS IN THE LEVEL OF GROUNDWATER MAY OCCUR DUE TO OTHER FACTORS THAN THOSE PRESENT AT THE TIME MEASUREMENTS WERE MADE.
3) THE GROUND SURFACE ELEVATION WAS INTERPOLATED TO THE NEAREST 1/2 FOOT BASED ON A DRAWING TITLED: "CITY OF MERIDEN, TOPOGRAPHIC SURVEY" SHEETS VT-01 AND VT-02, BY FUSS & O'NEILL INC, DATED MARCH 2022.

Fine	F
Medium	M
Coarse	C

BORING NO. **RMA23- 4**

No.	DATE	DESCRIPTION	DESIGNER	REVIEWER

SEAL

STATE OF CONNECTICUT — NICHOLAS ROSENBERG — 33142 — LICENSED PROFESSIONAL ENGINEER

SEAL

SCALE:
HORZ.:
VERT.:
DATUM:
HORZ.:
VERT.:
0
GRAPHIC SCALE

FUSS & O'NEILL
146 HARTFORD ROAD
MANCHESTER, CONNECTICUT 06040
860.646.2469
www.fando.com

CITY OF MERIDEN

BORING LOGS XV

BRIDGE REPLACEMENTS AND UTILITY IMPROVEMENTS
BUTLER STREET AND HANOVER STREET
MERIDEN CONNECTICUT

PROJ. No.: 20170932.C11
DATE: FEBRUARY 27, 2024

SA-116

File Path: J:\DWG\P20170932\C11\Structural\Plan\20170932C11_01_LOCATION PLAN.dwg Layout: SA-116 Plotted: Wed, February 28, 2024 - 2:54 PM User: astripsky
PC3: AUTOCAD PDF (GENERAL DOCUMENTATION).PC3 STB/CTB: FO.STB
LAYER STATE:
MS VIEW:

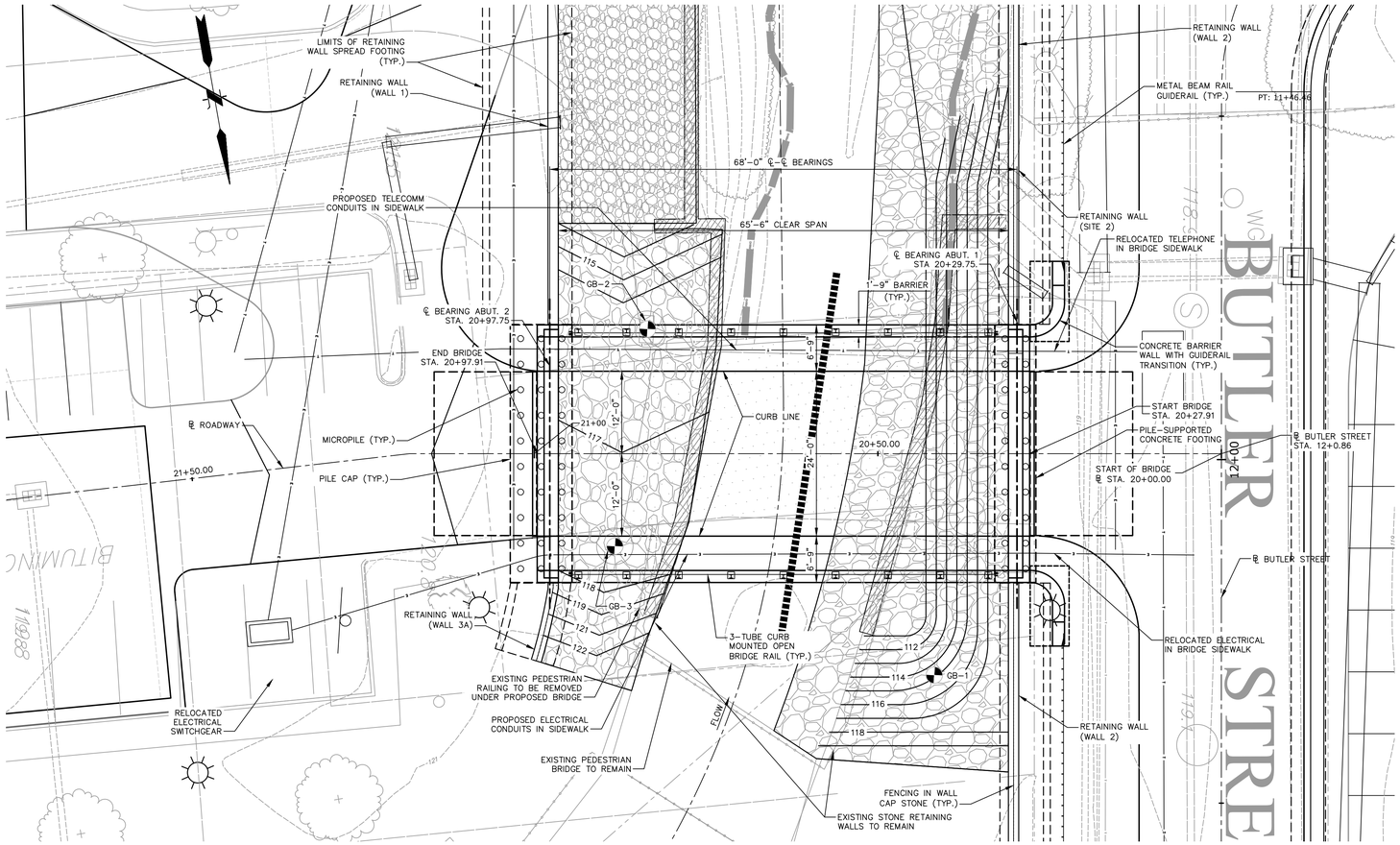

LEGEND:
▨ EXISTING WALL REMOVAL (PAID FOR UNDER REMOVAL OF EXISTING MASONRY)

PLAN
1" = 10'-0"

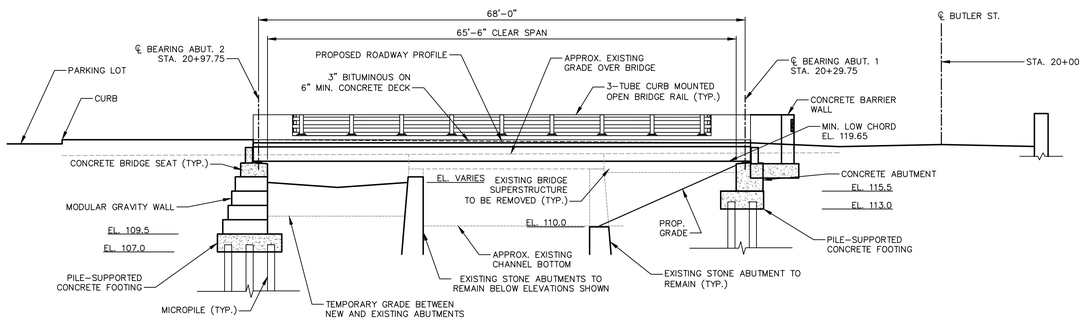

ELEVATION
1" = 10'-0"

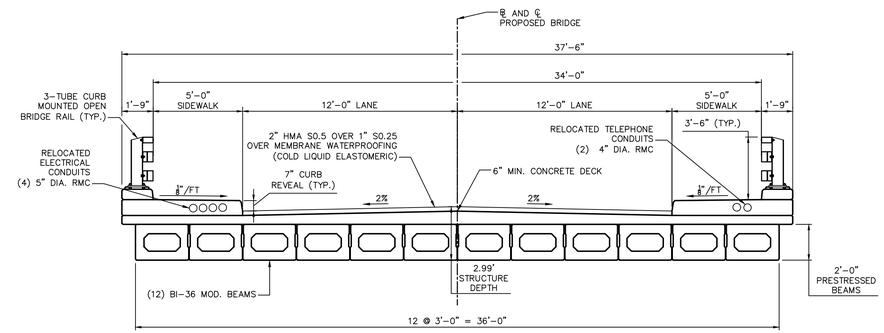

SECTION LOOKING UPSTATION
1" = 4'-0"

LEGEND:
BORING LOCATION

GENERAL NOTES:

SPECIFICATIONS: CONNECTICUT DEPARTMENT OF TRANSPORTATION FORM 818 (2020), SUPPLEMENTAL SPECIFICATIONS DATED JULY 2022 AND SPECIAL PROVISIONS.

DESIGN SPECIFICATIONS: AASHTO LRFD BRIDGE DESIGN SPECIFICATIONS (9TH EDITION – 2020), AS SUPPLEMENTED BY THE CONNECTICUT DEPARTMENT OF TRANSPORTATION BRIDGE DESIGN MANUAL (2003).

MATERIAL STRENGTHS:
CONCRETE:
CLASS PCC 03340 ..... f'c = 3,000 PSI
CLASS PCC 04460 ..... f'c = 4,000 PSI
CLASS PCC 04462 ..... f'c = 4,000 PSI

THE SPECIFIED CONCRETE STRENGTH USED IN DESIGN, f'c, OF THE CONCRETE COMPONENTS IS NOTED ABOVE. THE MINIMUM COMPRESSIVE STRENGTH OF THE CONCRETE IN THE CONSTRUCTED COMPONENTS SHALL CONFORM TO THE REQUIREMENTS OF SECTION 6.01 CONCRETE FOR STRUCTURES.

REINFORCEMENT
(ASTM A615 GRADE 60) ..... FY = 60,000 PSI

LIVE LOAD: HL-93, LEGAL AND PERMIT VEHICLES

FUTURE PAVING ALLOWANCE: NONE

BITUMINOUS CONCRETE OVERLAY: THIS SHALL CONSIST OF TWO COURSES OF TRAFFIC LEVEL 2 MIXES. THE BOTTOM COURSE SHALL BE HOT MIX ASPHALT (HMA S0.25) AND SHALL BE 1". THE TOP COURSE SHALL BE HOT MIX ASPHALT (2" HMA S0.5).

DIMENSIONS: WHEN DIMENSIONS ARE GIVEN TO LESS THAN THREE DECIMAL PLACES, THE OMITTED DIGITS SHALL BE ASSUMED TO BE ZEROS.

EXISTING DIMENSIONS: DIMENSIONS OF THE EXISTING STRUCTURE SHOWN ON THESE PLANS ARE FOR GENERAL REFERENCE ONLY. THEY HAVE BEEN TAKEN FROM THE ORIGINAL DESIGN DRAWINGS AND ARE NOT GUARANTEED. THE CONTRACTOR SHALL TAKE ALL FIELD MEASUREMENTS NECESSARY TO ASSURE PROPER FIT OF THE FINISHED WORK AND SHALL ASSUME FULL RESPONSIBILITY FOR THEIR ACCURACY. WHEN SHOP DRAWINGS BASED ON FIELD MEASUREMENTS ARE SUBMITTED FOR REVIEW, THE FIELD MEASUREMENTS SHALL ALSO BE SUBMITTED FOR REFERENCE BY THE REVIEWER.

MASH TEST LEVEL: THE 3 TUBE CURB MOUNTED MEETS THE TL-4 CRITERIA FOR MASH 2016.

CONCRETE NOTES:

REMAIN-IN-PLACE FORMS: THE USE OF REMAIN-IN-PLACE FORMS ON THIS STRUCTURE IS NOT ALLOWED.

PENETRATING SEALER: PENETRATING SEALER PROTECTIVE COMPOUND SHALL BE APPLIED TO ALL EXPOSED SURFACES, INCLUDING CURBS, SEE SPECIAL PROVISIONS.

EXPOSED EDGES: EXPOSED EDGES OF CONCRETE SHALL BE BEVELED 1" X 1" UNLESS DIMENSIONED OTHERWISE.

CONCRETE COVER: ALL REINFORCEMENT SHALL HAVE TWO INCHES COVER UNLESS DIMENSIONED OTHERWISE.

REINFORCEMENT: ALL REINFORCEMENT SHALL BE ASTM A615 GRADE 60.

GALVANIZED REINFORCING BARS: ALL REINFORCEMENT SHALL BE GALVANIZED AFTER FABRICATION UNLESS NOTED OTHERWISE. ALL REINFORCEMENT SHALL CONFORM TO THE EQUIREMENTS OF ASTM A767, CLASS 1, INCLUDING SUPPLEMENTAL REQUIREMENTS. THE COST OF FURNISHING AND PLACING THIS REINFORCEMENT SHALL BE INCLUDED IN THE ITEM "DEFORMED STEEL BARS – GALVANIZED."

CONSTRUCTION JOINTS: CONSTRUCTION JOINTS, OTHER THAN THOSE SHOWN ON THE PLANS WILL NOT BE PERMITTED WIHOUT THE PRIOR APPROVAL OF THE ENGINEER.

PRECAST CONCRETE NOTES:

THE CONTRACTOR SHALL MANUFACTURE AND CONSTRUCT PRESTRESSED DECK UNITS IN ACCORDANCE WITH THE SPECIAL PROVISIONS FOR "PRESTRESSED DECK UNITS" TO THE INSIDE DIMENSIONS, LENGTH AND DETAILS SHOWN ON THESE PLANS.

ALL INSERTS OR HOLES CAST INTO THE DECK UNITS FOR THE SOLE PURPOSE OF HANDLING AND SETTING THE UNITS SHALL BE SEALED WITH GROUT TO A SMOOTH FINISH UPON COMPLETION OF THE WORK.

THE COST OF FURNISHING AND INSTALLING THE INSERTS SHALL BE INCLUDED IN THE ITEM "PRESTRESSED DECK UNIT" CORRESPONDING TO EACH SIZE. ALL INSERTS SHALL HAVE A CORROSIVE RESISTANT COATING.

ALL REINFORCEMENT TO HAVE 2" COVER UNLESS OTHERWISE NOTED.

No.	DATE	DESCRIPTION	DESIGNER	REVIEWER

SEAL

SEAL

STATE OF CONNECTICUT · KRISTEN E. SOUCHAY · No. 22072 · LICENSED PROFESSIONAL ENGINEER

SCALE:
HORZ.: AS NOTED
VERT.: AS NOTED
DATUM:
HORZ.: NAD 83
VERT.: NAVD 88
0
GRAPHIC SCALE

FUSS & O'NEILL
146 HARTFORD ROAD
MANCHESTER, CONNECTICUT 06040
860.646.2469
www.fando.com

CITY OF MERIDEN

BUTLER STREET BRIDGE
GENERAL PLAN & ELEVATION

BRIDGE REPLACEMENTS AND UTILITY IMPROVEMENTS
BUTLER STREET AND HANOVER STREET

MERIDEN CONNECTICUT

PROJ. No.: 20170932.C11
DATE: FEBRUARY 27, 2024

SA-201

File Path: J:\DWG\P2017\0932\C11\Structural\Plan\20170932C11_03_BUTLER PLAN.dwg Layout: SA-201-PH1 Plotted: Wed, February 28, 2024 - 11:52 AM User: astripsky
Plotter: AUTOCAD PDF (GENERAL DOCUMENTATION).PC3 CTB File: FO.STB
LAYER STATE:
MS VIEW:

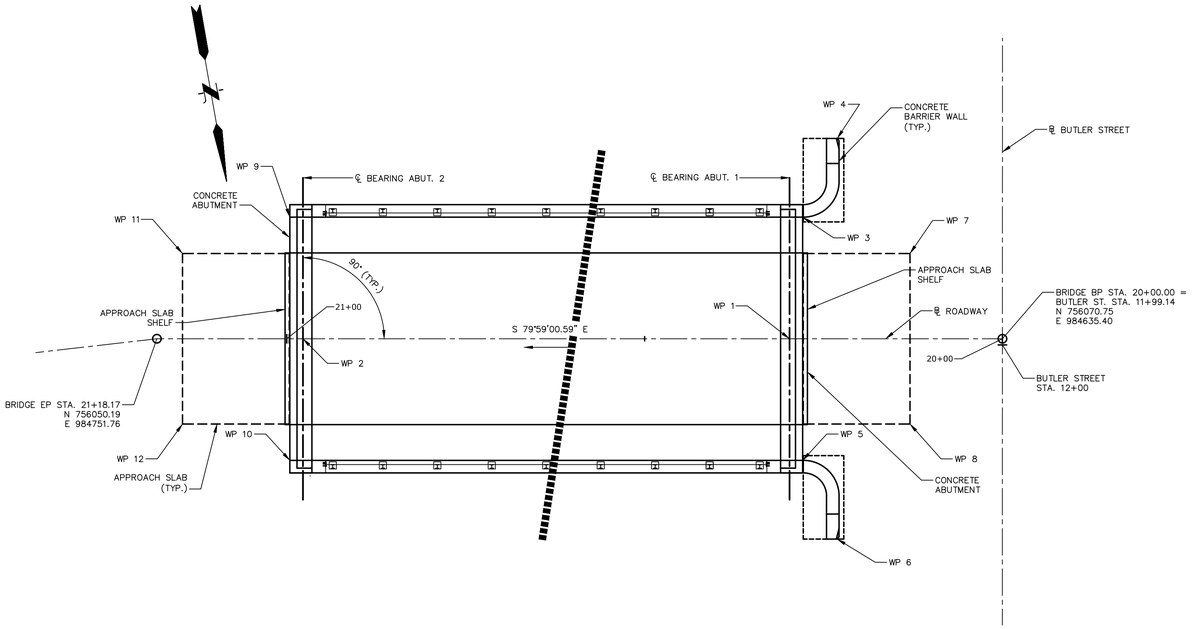

BRIDGE LAYOUT

1" = 10'-0"

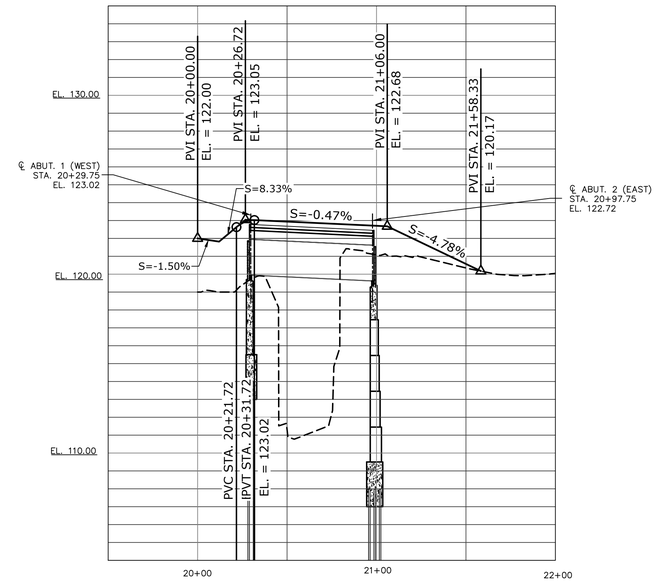

BRIDGE ROADWAY PROFILE

HORIZONTAL: 1" = 40'-0"
VERTICAL: 1" = 4'-0"

WP #	COORDINATES		STATION	OFFSET
	NORTHING	EASTING		
1	756065.572	984664.691	20+29.75	0.00
2	756053.744	984731.655	20+97.75	0.00
3	756049.150	984659.929	20+27.91	17.00
4	756039.159	984653.256	20+23.08	28.00
5	756082.632	984665.843	20+27.91	-17.00
6	756094.304	984662.996	20+23.08	-28.00
7	756056.765	984646.042	20+12.91	11.92
8	756080.235	984650.187	20+12.91	-11.92
9	756036.685	984730.503	20+99.58	17.00
10	756070.166	984736.417	20+99.58	-17.00
11	756039.082	984746.159	21+14.58	11.92
12	756062.552	984750.304	21+14.58	-11.92

CONCRETE DISTRIBUTION		
SUPERSTRUCTURE (NOT INCLUDING PARAPETS)	C.Y.	98
SUBSTRUCTURE	C.Y.	44
APPROACH SLAB	C.Y.	39
FOOTINGS	C.Y.	105
TOTAL	C.Y.	286

ITEM	BRIDGE COMPONENTS	PCC CLASS
FOOTING CONCRETE	ABUTMENT AND WINGWALL FOOTINGS	PCC03340
ABUTMENT AND WALL CONCRETE	ABUTMENT AND WINGWALL STEMS KEEPER BLOCKS, CHEEKWALLS & BARRIER WALLS	PCC03340
BRIDGE DECK CONCRETE	BRIDGE DECK	PCC04462
PARAPET CONCRETE	END BLOCKS AND CURBS	PCC04462
APPROACH SLAB CONC.	APPROACH SLABS	PCC04460

HYDRAULIC SUMMARY DATA		
DRAINAGE AREA (MI^2)	11.2	
DESIGN FREQUENCY (YEAR)	100	
DESIGN DISCHARGE (CFS)	3289	
AVERAGE DAILY FLOW ELEVATION (FT)	UPSTREAM	DOWNSTREAM
	112.7	107.5
DESIGN WATER SURFACE ELEVATION (FT)	UPSTREAM	DOWNSTREAM
	119.2	119.1
MAXIMUM SCOUR ELEVATION (FT)	N/A	
WORST CASE SCOUR SUBSTRUCTURE UNIT	N/A	

File Path: J:\DWG\P20170932\C11\Structural\Plan\20170932C11_03_BUTLER PLAN.dwg Layout: SA-202-PH1 Plotted: Wed, February 28, 2024 - 11:52 AM User: astripsky
Plotter: AUTOCAD PDF (GENERAL DOCUMENTATION).PC3 CTB File: FO.STB
LAYER STATE:
MS VIEW:

No.	DATE	DESCRIPTION	DESIGNER	REVIEWER

SEAL

SEAL

STATE OF CONNECTICUT REGISTERED PROFESSIONAL ENGINEER No. 22072 LICENSED

SCALE:
HORZ.: AS NOTED
VERT.: AS NOTED
DATUM:
HORZ.: NAD 83
VERT.: NAVD 88
0
GRAPHIC SCALE

FUSS & O'NEILL
146 HARTFORD ROAD
MANCHESTER, CONNECTICUT 06040
860.646.2469
www.fando.com

CITY OF MERIDEN

BUTLER STREET BRIDGE
LAYOUT PLAN

BRIDGE REPLACEMENT AND UTILITY IMPROVEMENTS
BUTLER STREET AND HANOVER STREET

MERIDEN CONNECTICUT

PROJ. No.: 20170932.C11
DATE: FEBRUARY 27, 2024

SA-202

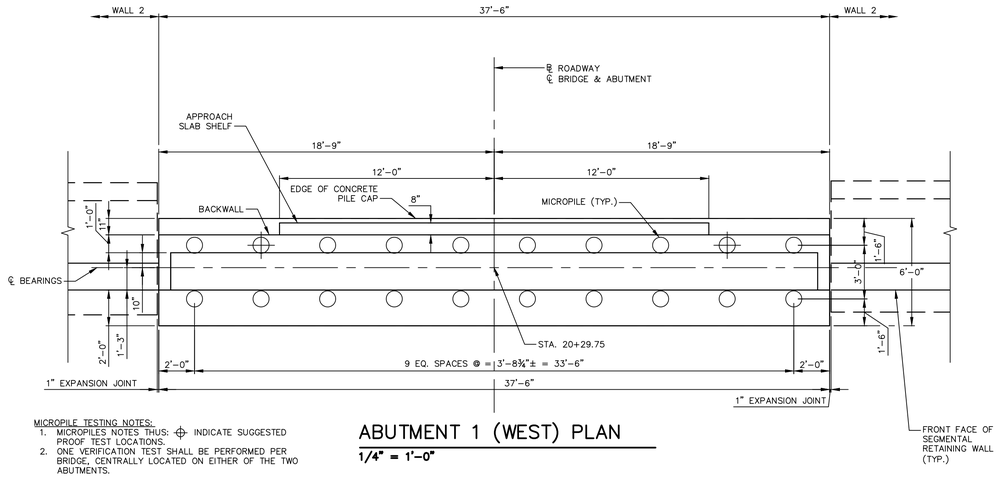

MICROPILE TESTING NOTES:
1. MICROPILES NOTES THUS: ⊕ INDICATE SUGGESTED PROOF TEST LOCATIONS.
2. ONE VERIFICATION TEST SHALL BE PERFORMED PER BRIDGE, CENTRALLY LOCATED ON EITHER OF THE TWO ABUTMENTS.

ABUTMENT 1 (WEST) PLAN
1/4" = 1'-0"

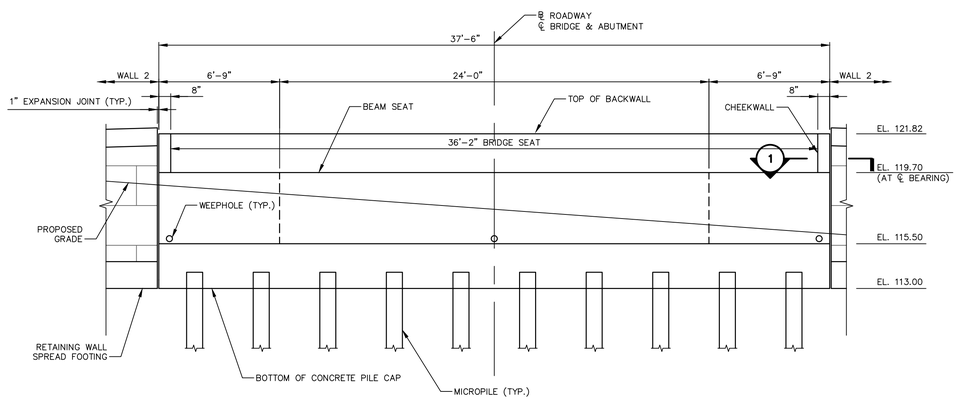

ABUTMENT 1 (WEST) ELEVATION
1/4" = 1'-0"

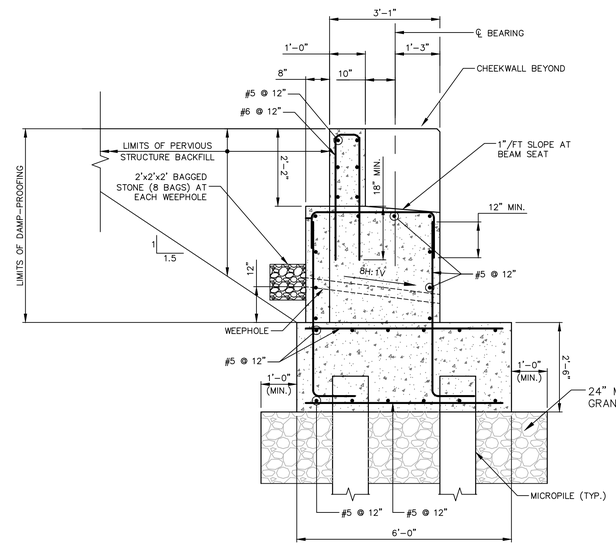

TYPICAL SECTION AT BACKWALL– ABUTMENT 1
1/2" = 1'-0"

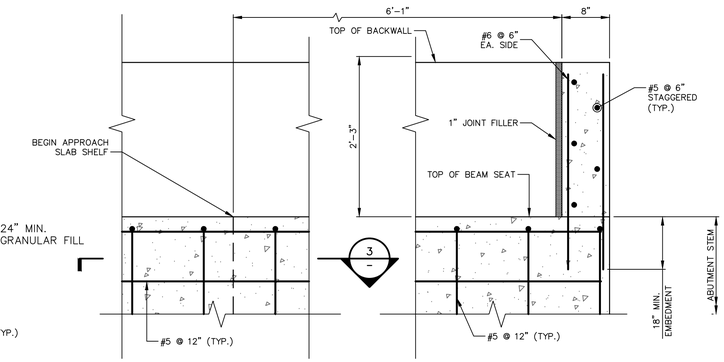

SECTION 2
1" = 1'-0"

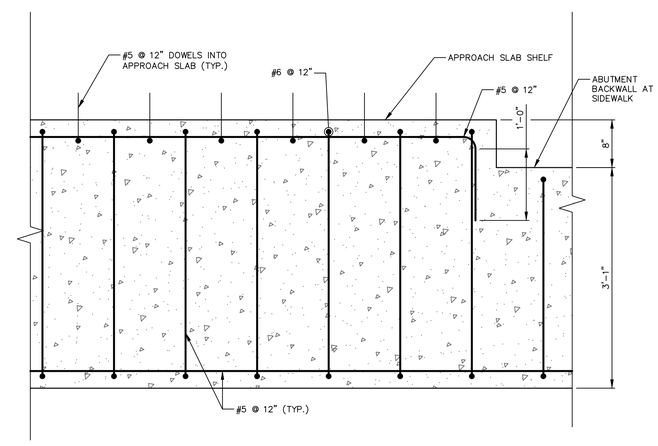

SECTION 3
1" = 1'-0"

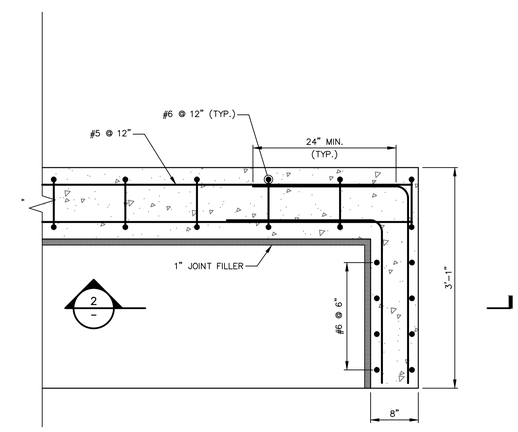

SECTION 1
1" = 1'-0"

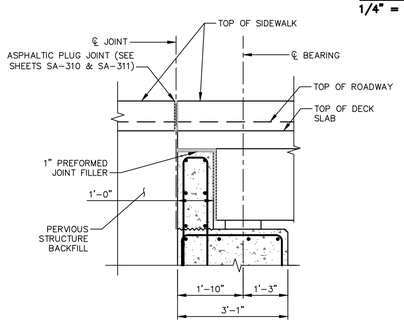

BACKWALL DETAIL AT SIDEWALK
1/2" = 1'-0"

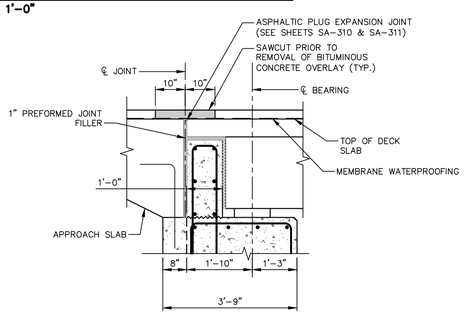

BACKWALL DETAIL AT APPROACH SLAB
1/2" = 1'-0"

File Path: J:\DWG\P20170932C11\Structural\Plan\20170932C11_05_BUTLER ABUT.dwg Layout: SA-203 Plotted: Wed, February 28, 2024 - 11:52 AM User: astripsky
Plotter: AUTOCAD PDF (GENERAL DOCUMENTATION).PC3 CTB File: FO.STB
LAYER STATE:
MS VIEW:

No.	DATE	DESCRIPTION	DESIGNER	REVIEWER

SEAL

SEAL

STATE OF CONNECTICUT REGISTERED SOLAR PROFESSIONAL ENGINEER No. 22072 LICENSED

SCALE:
HORZ.: AS NOTED
VERT.: AS NOTED
DATUM:
HORZ.: NAD 83
VERT.: NAVD 88
0
GRAPHIC SCALE

FUSS & O'NEILL
146 HARTFORD ROAD
MANCHESTER, CONNECTICUT 06040
860.646.2469
www.fando.com

CITY OF MERIDEN
BUTLER STREET BRIDGE
ABUTMENT 1
BRIDGE REPLACEMENT AND UTILITY IMPROVEMENTS
BUTLER STREET AND HANOVER STREET
MERIDEN CONNECTICUT

PROJ. No.: 20170932C11
DATE: FEBRUARY 27, 2024

SA-203

MICROPILE TESTING NOTES:
1. MICROPILES NOTES THUS: ⊕ INDICATE SUGGESTED PROOF TEST LOCATIONS.
2. ONE VERIFICATION TEST SHALL BE PERFORMED PER BRIDGE, CENTRALLY LOCATED ON EITHER OF THE TWO ABUTMENTS.

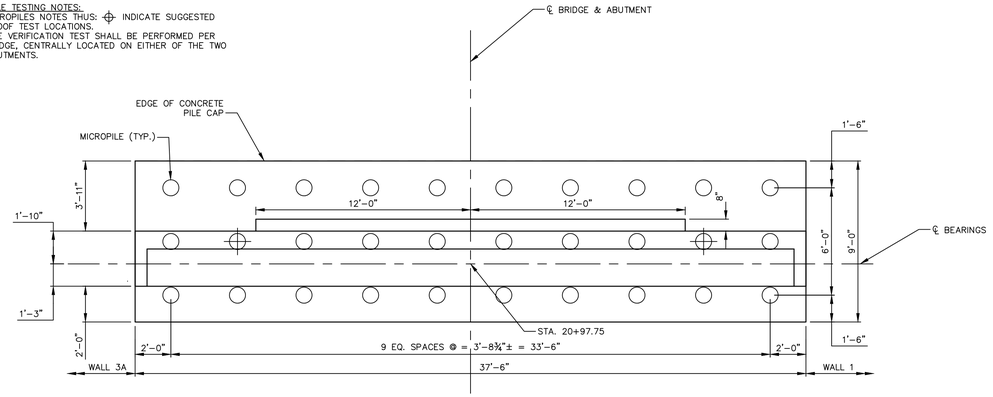

ABUTMENT 2 (EAST) PLAN
1/4" = 1'-0"

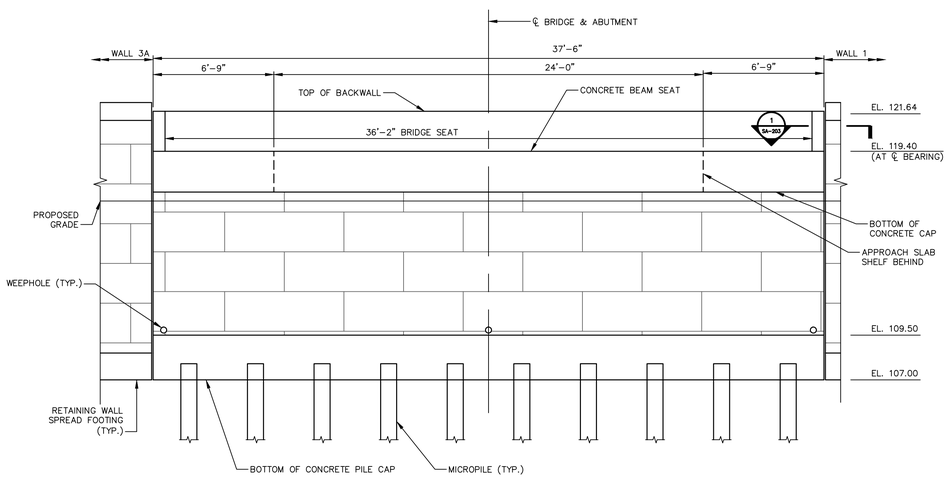

ABUTMENT 2 (EAST) ELEVATION
1/4" = 1'-0"

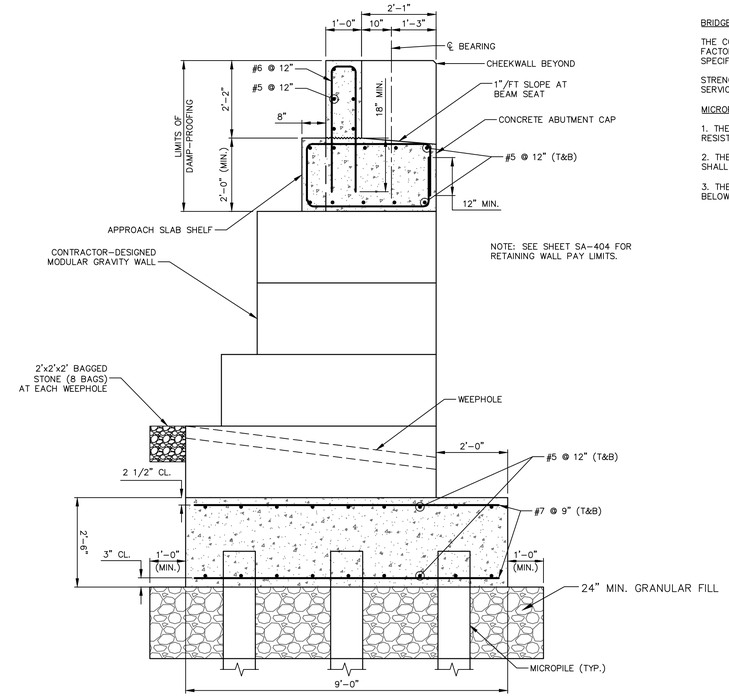

TYPICAL SECTION – ABUTMENT 2
1/2" = 1'-0"

BRIDGE ABUTMENT LOADING:

THE CONTRACTOR-DESIGNED MODULAR WALLS SHALL BE DESIGNED FOR THE FOLLOWING LOADS, FACTORED IN ACCORDANCE WITH THE LOAD COMBINATIONS IN THE AASHTO LRFD BRIDGE DESIGN SPECIFICATIONS.

STRENGTH: 24 KLF
SERVICE: 17 KLF

MICROPILE NOTES:

1. THE MICROPILE DESIGN PROVIDED ON THESE DRAWINGS IS BASED ON THE LOADS AND RESISTANCES SHOWN IN THE TABLE ABOVE.
2. THE MICROPILES SHALL BE DESIGNED USING PERMANENT STEEL CASINGS. THE CASINGS SHALL EXTEND INTO BEDROCK.
3. THE 10 3/4" CASING SHALL BE INSTALLED WITH NO CASING JOINTS WITHIN 10 FEET BELOW THE BOTTOM OF THE PILE CAP.

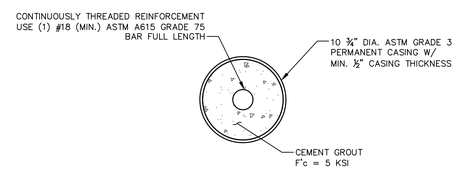

SECTION A
1 1/2" = 1'-0"

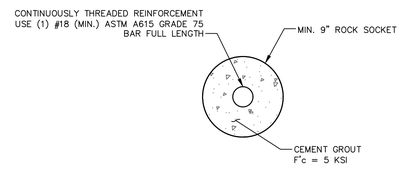

SECTION B
1 1/2" = 1'-0"

MICROPILE DESIGN TABLE ABUTMENT 1	
NOMINAL PILE RESISTANCE	132 KIPS
RESISTANCE FACTOR	0.50
FACTORED PILE RESISTANCE	66 KIPS

MICROPILE DESIGN TABLE ABUTMENT 2	
NOMINAL PILE RESISTANCE	192 KIPS
RESISTANCE FACTOR	0.50
FACTORED PILE RESISTANCE	96 KIPS

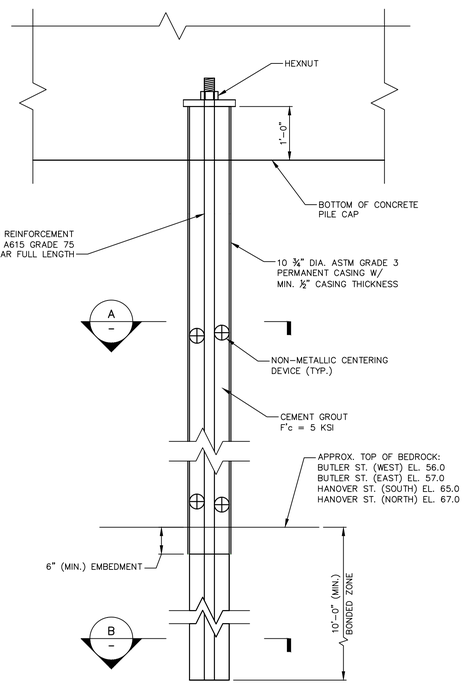

TYPICAL MICROPILE DETAILS
3/4" = 1'-0"

No.	DATE	DESCRIPTION	DESIGNER	REVIEWER

SEAL

SEAL

STATE OF CONNECTICUT · BRIDGE E. SOLOMONT · No. 22072 · LICENSED PROFESSIONAL ENGINEER

SCALE:
HORZ.: AS NOTED
VERT.: AS NOTED
DATUM:
HORZ.: NAD 83
VERT.: NAVD 88
0
GRAPHIC SCALE

FUSS & O'NEILL
146 HARTFORD ROAD
MANCHESTER, CONNECTICUT 06040
860.646.2469
www.fando.com

CITY OF MERIDEN
BUTLER STREET BRIDGE
ABUTMENT 2
BRIDGE REPLACEMENT AND UTILITY IMPROVEMENTS
BUTLER STREET AND HANOVER STREET
MERIDEN CONNECTICUT

PROJ. No.: 20170932C11
DATE: FEBRUARY 27, 2024

SA-204

File Path: J:\DWG\P\20170932\C11\Structural\Plan\20170932C11_05_BUTLER ABUT.dwg Layout: SA-204 Plotted: Wed, February 28, 2024 - 11:52 AM User: astripsky
Plotter: AUTOCAD PDF (GENERAL DOCUMENTATION).PC3 CTB File: FO.STB
LAYER STATE:
MS VIEW:

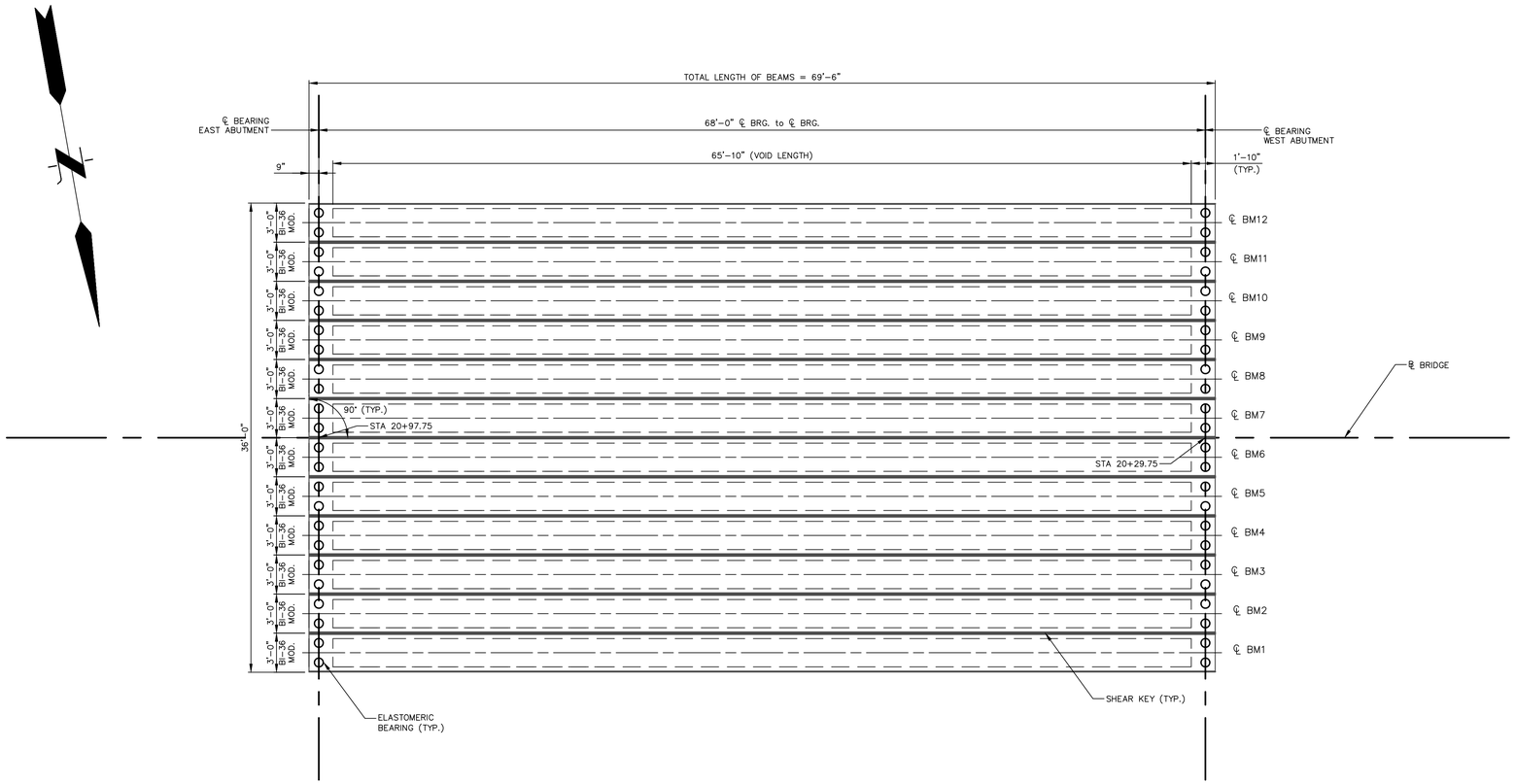

FRAMING PLAN

SCALE: 3/16" = 1'-0"

PRESTRESSED DECK UNIT NOTES:

1. PRESTRESSED DECK UNITS SHALL CONFORM TO THE FOLLOWING REQUIREMENTS:
   f'ci = 6 KSI
   f'c = 8 KSI
2. PRESTRESSED STRANDS SHALL CONFORM TO THE FOLLOWING REQUIREMENTS. 0.6" DIAMETER, UNCOATED, 7 WIRE, LOW RELAXATION STRANDS CONFORMING TO THE REQUIREMENTS OF AASHTO M203, GRADE 270:
   ULTIMATE STRENGTH (f'ps) = 270,000 PSI
   JACKING TENSION (fj) = 43,940 LBS. PER STRAND
3. PRESTRESSED STRANDS SHALL BE PLACED 2" MINIMUM ON CENTER AND SHALL HAVE A MINIMUM COVER OF 2".
4. ENDS OF THE DECK UNITS SHALL BE VERTICAL AFTER APPLICATION OF FULL DEAD LOAD.
5. THE DRILLING OF HOLES IN PRESTRESSED DECK UNITS, OR THE USE OF POWDER ACTUATED TOOLS ON PRESTRESSED DECK UNIT WILL NOT BE PERMITTED.
6. MILD REINFORCING STEEL SHALL BE GALVANIZED ASTM A615 GRADE 60.
7. THE CONTRACTOR SHALL MANUFACTURE AND CONSTRUCT DECK UNITS IN ACCORDANCE WITH SPECIAL PROVISIONS FOR "PRESTRESSED DECK UNITS".
8. ALL INSERTS OF HOLES CAST INTO THE DECK UNITS FOR THE PURPOSE OF HANDLING AND SETTING THE UNITS SHALL BE DEALD WITH GROUT TO A SMOOTH FINISH UPON COMPLETION OF THE WORK.
9. THE COST OF FURNISHING INSERTS SHALL BE INCLUDED UNDER ITEM #0514226 "PRESTRESSED DECK UNITS".
10. LIFTING HOOKS SHALL BE PLACED IN LINE WITH THE CENTER OF THE BEARINGS AND SHALL BE INSTALLED PER THE FABRICATOR'S STANDARD DETAILS. THE FABRICATORS IS FULLY RESPONSIBLE FOR THE DESIGN OF THE LIFTING DEVICES WHICH SHALL BE ADEQUATE FOR THE SAFETY OF FACTOR'S REQUIRED BY THE ERECTION PROCEDURE.

STRANDS SUMMARY

DECK UNIT TYPE	STRAND NUMBER	STRAND CG AT MIDSPAN	STRAND CG AT ENDS
BI-36 MOD.	24	3.67	3.82 (2 STRANDS DEBONDED) 4.00 (4 STRANDS DEBONDED)

CAMBER TABLE

MEMBER NUMBER	AT TRANSFER	AT ERECTION	FINAL
	CAMBER DUE TO PRETENSIONING FORCE AT TRANSFER MINUS THE DEFLECTION DUE TO THE DEAD LOAD OF THE MEMBER	CAMBER (DUE TO PRETENSIONING FORCE AT TRANSFER MINUS THE DEFLECTION DUE TO THE DEAD LOAD OF THE MEMBER) APPROXIMATELY 30 DAYS AFTER TRANSFER.	CAMBER AFTER ALL DEAD LOADS ARE APPLIED TO THE STRUCTURE.
BM1 & BM12	2.143	2.632	1.434
BM1 – BM11	2143	2.741	1664

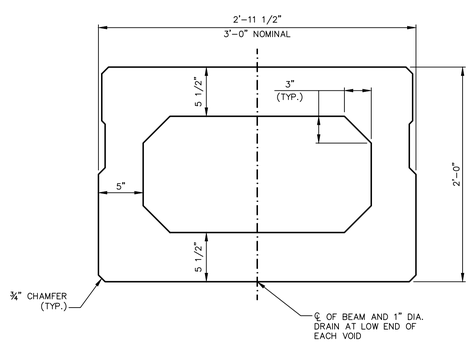

BI-36 MOD.

SCALE: 1 1/2" = 1'-0"

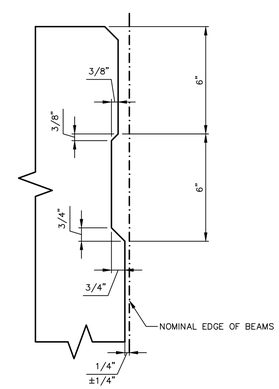

TYPICAL KEYWAY DETAIL

SCALE: 3" = 1'-0"

SHIPPING DATA FOR PRESTRESSED DECK UNITS MAXIMUM ESTIMATED VALUE

MEMBER	SHIPPING LENGTH	SHIPPING HEIGHT	SHIPPING WIDTH	SHIPPING WEIGHT
BI-36 Mod.	69'-6"	24"	36"	37,980 LB

No.	DATE	DESCRIPTION	DESIGNER	REVIEWER

SEAL

SEAL

STATE OF CONNECTICUT KRISTIN E. SOLOMON No. 22072 LICENSED PROFESSIONAL ENGINEER

SCALE:
HORZ.: AS NOTED
VERT.: AS NOTED
DATUM:
HORZ.: NAD 83
VERT.: NAVD 88
0
GRAPHIC SCALE

FUSS & O'NEILL
146 HARTFORD ROAD
MANCHESTER, CONNECTICUT 06040
860.646.2469
www.fando.com

CITY OF MERIDEN
BUTLER STREET BRIDGE
FRAMING PLAN
BRIDGE REPLACEMENT AND UTILITY IMPROVEMENTS
BUTLER STREET AND HANOVER STREET
MERIDEN CONNECTICUT

PROJ. No.: 20170932C11
DATE: FEBRUARY 27, 2024

SA-205

File Path: J:\DWG\P2017\0932\C11\Structural\Plan\20170932C11_06_BUTLER FRAMING & BEAM.dwg Layout: SA-205 Plotted: Wed, February 28, 2024 - 11:52 AM User: astripsky
Plotter: AUTOCAD PDF (GENERAL DOCUMENTATION).PC3 CTB File: FO.STB
LAYER STATE:
MS VIEW:

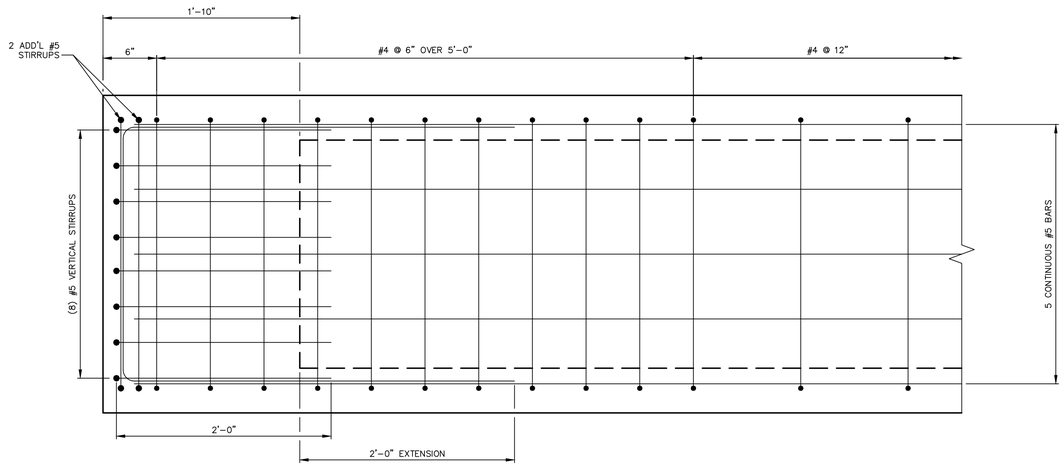

PLAN VIEW

1 1/2" = 1'-0"

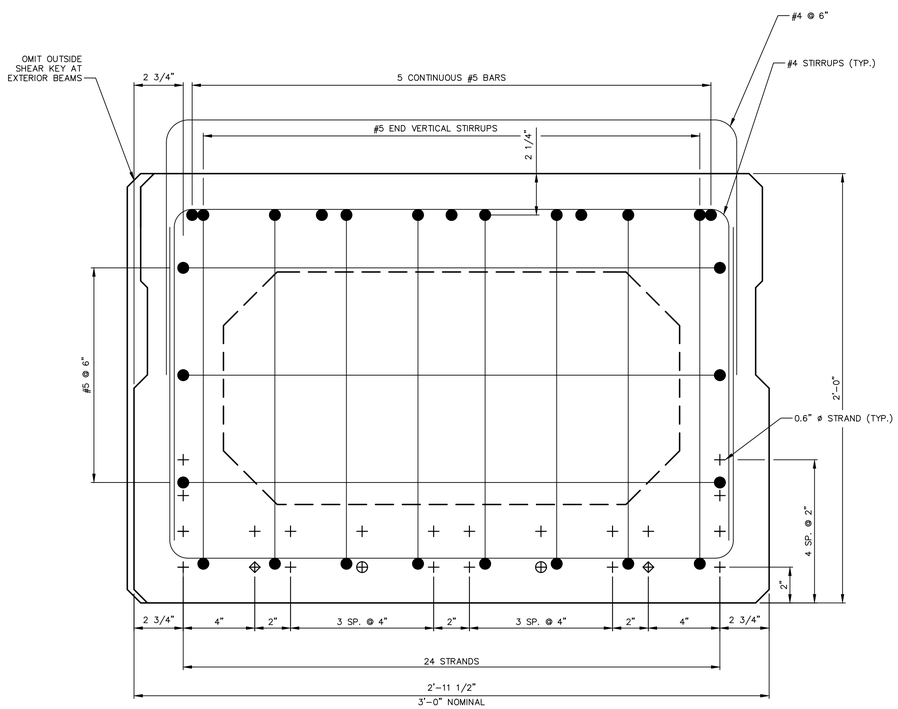

NOTE:
1. ⊕ DENOTES STRANDS DEBONDED 10'-0" FROM END
2. ⌖ DENOTES STRANDS DEBONDED 5'-0" FROM END

TYPICAL SECTION AT BEAM END

SCALE: 3" = 1'-0"

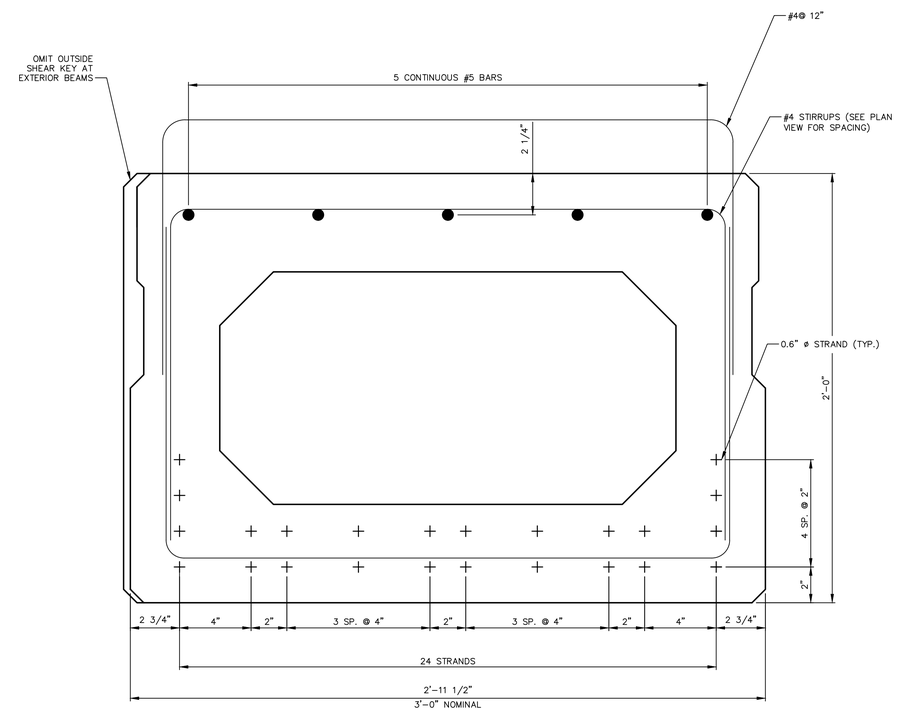

TYPICAL SECTION THRU MIDSPAN

SCALE: 3" = 1'-0"

No.	DATE	DESCRIPTION	DESIGNER	REVIEWER

SEAL

SEAL

STATE OF CONNECTICUT · KRISTEN E. SOLOWAY · No. 22072 · LICENSED PROFESSIONAL ENGINEER

SCALE:
HORZ.: AS NOTED
VERT.: AS NOTED
DATUM:
HORZ.: NAD 83
VERT.: NAVD 88
0
GRAPHIC SCALE

FUSS & O'NEILL
146 HARTFORD ROAD
MANCHESTER, CONNECTICUT 06040
860.646.2469
www.fando.com

CITY OF MERIDEN
BUTLER STREET BRIDGE
BEAM DETAILS
BRIDGE REPLACEMENT AND UTILITY IMPROVEMENTS
BUTLER STREET AND HANOVER STREET
MERIDEN CONNECTICUT

PROJ. No.: 20170932C11
DATE: FEBRUARY 27, 2024

SA-206

File Path: J:\DWG\P2017\0932\C11\Structural\Plan\20170932C11_06_BUTLER FRAMING & BEAM.dwg Layout: SA-206 Plotted: Wed, February 28, 2024 - 11:52 AM User: astripsky
Plotter: AUTOCAD PDF (GENERAL DOCUMENTATION).PC3 CTB File: FO.STB
MS VIEW:
LAYER STATE:

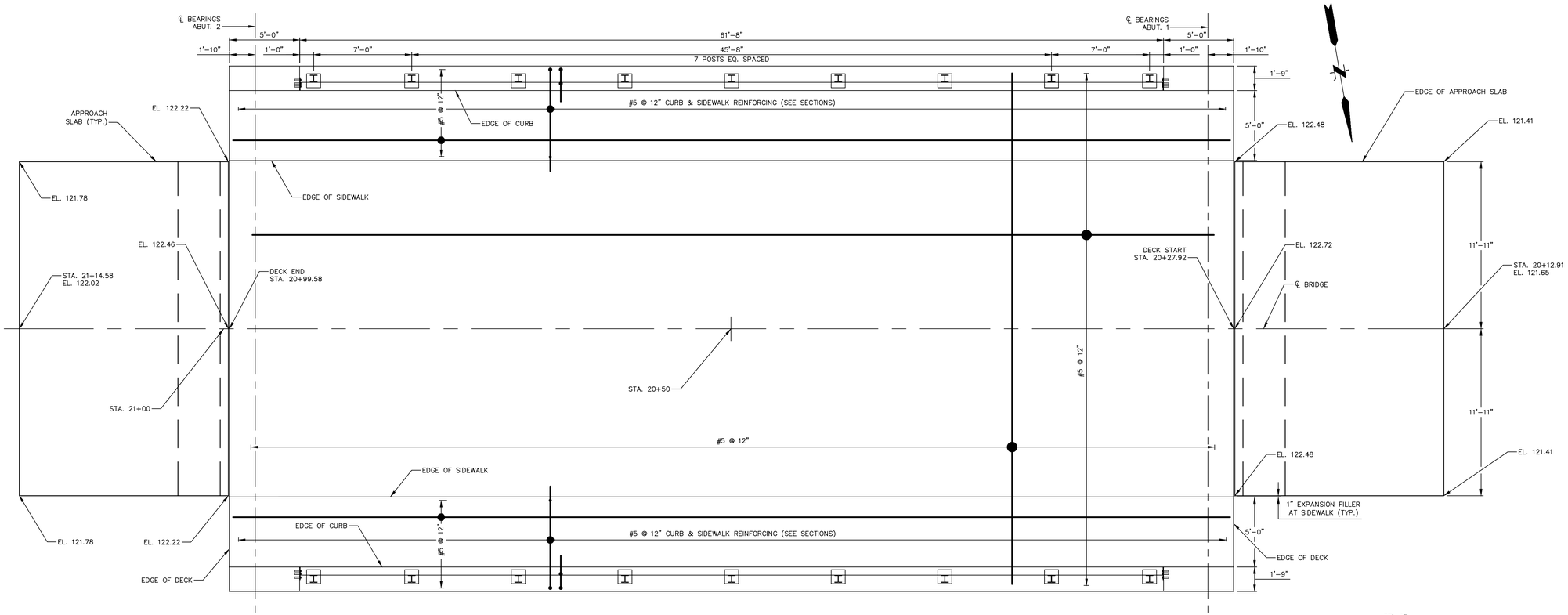

DECK PLAN
1/4" = 1'-0"

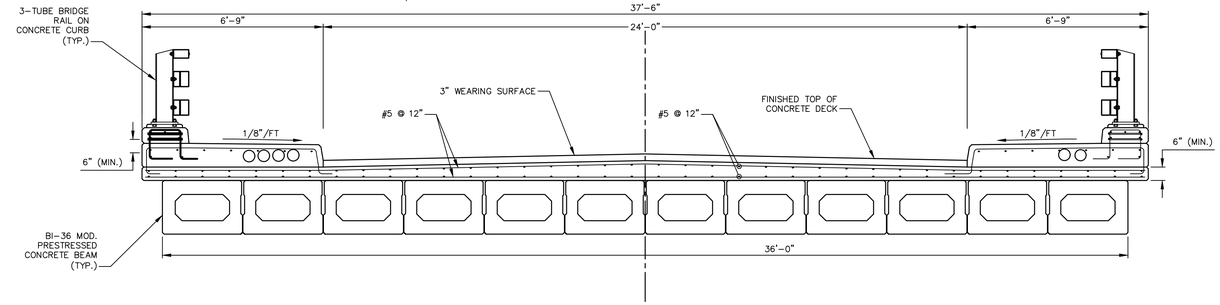

NOTE: BEAM AND CURB REINFORCING OMITTED FOR CLARITY. SEE APPLICABLE DETAILS.

DECK SECTION
3/8" = 1'-0"

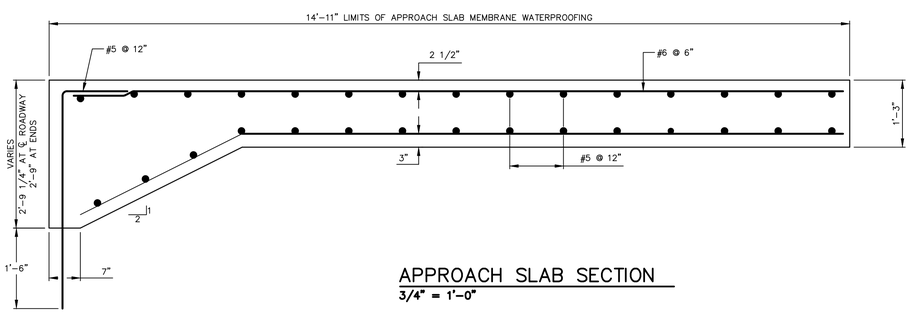

APPROACH SLAB SECTION
3/4" = 1'-0"

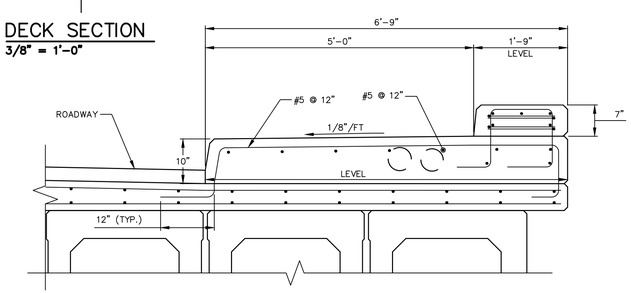

SIDEWALK DETAIL
3/4" = 1'-0"

File Path: J:\DWG\P2017\0932\C11\Structural\Plan\20170932C11_07_BUTLER DECK.dwg Layout: SA-207 Plotted: Wed, February 28, 2024 - 11:53 AM User: astripsky
Plotter: AUTOCAD PDF (GENERAL DOCUMENTATION).PC3 CTB File: FO.STB
MS VIEW: LAYER STATE:

No.	DATE	DESCRIPTION	DESIGNER	REVIEWER

SEAL

SEAL

STATE OF CONNECTICUT KRISTEN E. SOLOWAY No. 22072 LICENSED PROFESSIONAL ENGINEER

SCALE:
HORZ.: AS NOTED
VERT.: AS NOTED
DATUM:
HORZ.: NAD 83
VERT.: NAVD 88
0
GRAPHIC SCALE

FUSS & O'NEILL
146 HARTFORD ROAD
MANCHESTER, CONNECTICUT 06040
860.646.2469
www.fando.com

CITY OF MERIDEN
BUTLER STREET BRIDGE
DECK PLAN & DETAILS
BRIDGE REPLACEMENT AND UTILITY IMPROVEMENTS
BUTLER STREET AND HANOVER STREET
MERIDEN CONNECTICUT

PROJ. No.: 20170932C11
DATE: FEBRUARY 27, 2024

SA-207

NOTES:
1. THE ELASTOMERIC BEARINGS ARE DESIGNED IN ACCORDANCE WITH METHOD A OF THE AASHTO LRFD BRIDGE DESIGN SPECIFICATIONS.
2. THE ELASTOMER SHALL BE TYPE CR. GRADE 3 AS DEFINED BY ASTM D4104 AND SHALL HAVE A SHORE S DUROMETER HARDNESS OF 50 ±5 POINTS AND A SHEAR MODULUS WITHIN LIMITS OF 130–180 PSI. THE ELASTOMER SHALL CONTAIN ONLY VIRGIN POLYCHLOROPRENE (NEOPRENE) AS THE RAW POLYMER.
3. THE ELASTOMER BEARINGS SHALL BE INSTALLED WHEN THE AMBIENT TEMPERATURE IS BETWEEN 40°F AND 77°F AND HAS BEEN WITHIN THIS RANGE FOR MORE THAN TWO HOURS.
4. THE CONCRETE ABUTMENT SEATS SHALL BE CAREFULLY FINISHED SMOOTH TO AN EVEN LEVEL SURFACE AND SHALL SHOW NO VARIATIONS FROM A TRUE PLAN GREATER THAN 1/16".
5. THE INTERNAL STEEL LAMINAE SHALL CONFORM TO ASTM A570, GRADE 36.
6. ELASTOMERIC BEARING PADS SHALL BE PAID UNDER THE ITEM "ELASTOMERIC BEARING PADS".

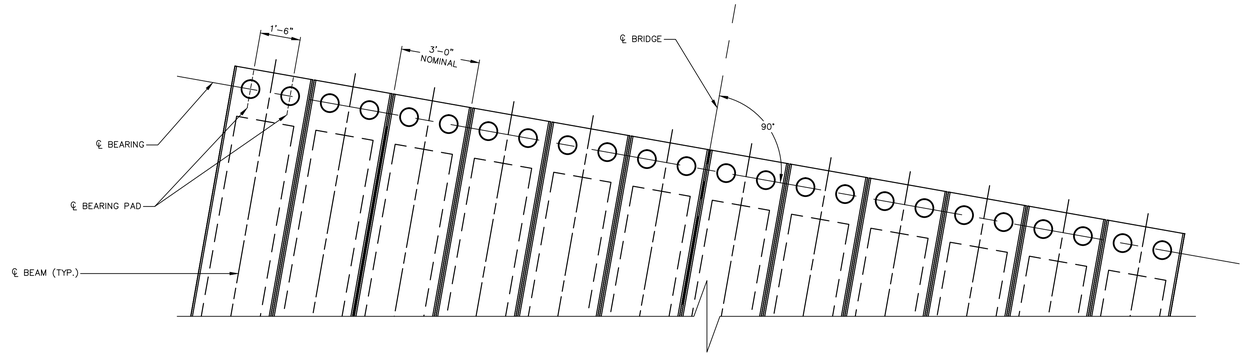

BEARING LAYOUT PLAN
3/8" = 1'-0"

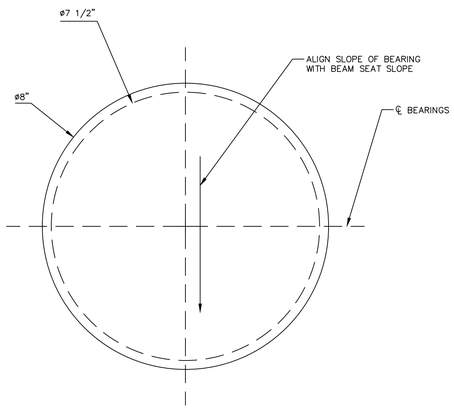

BEARING PLAN
6" = 1'-0"

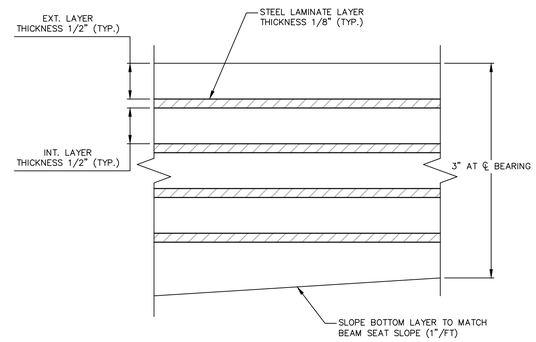

BEARING SECTION
1'-0" = 1'-0"

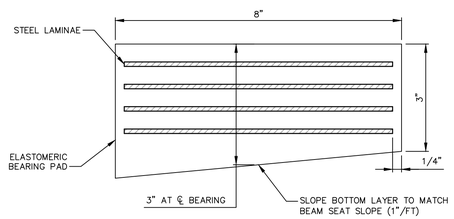

BEARING ELEVATION
6" = 1'-0"

FINISHED TOP OF CONCRETE DECK ELEVATIONS L=69'-6"					
℄ OF BEAM	0/4L (℄ OF WEST ABUTMENT)	1/4L	2/4L	3/4L	4/4L (℄ OF EAST ABUTMENT)
BM1	122.53	122.46	122.38	122.30	122.23
BM2	122.53	122.46	122.38	122.30	122.23
BM3	122.56	122.49	122.41	122.33	122.26
BM4	122.62	122.55	122.47	122.39	122.32
BM5	122.68	122.61	122.53	122.45	122.38
BM6	122.74	122.67	122.59	122.51	122.44
BM7	122.74	122.67	122.59	122.51	122.44
BM8	122.68	122.61	122.53	122.45	122.38
BM9	122.62	122.55	122.47	122.39	122.32
BM10	122.56	122.49	122.41	122.33	122.26
BM11	122.53	122.46	122.38	122.30	122.23
BM12	122.53	122.46	122.38	122.30	122.23

No.	DATE	DESCRIPTION	DESIGNER	REVIEWER
####	####	####	####	####
####	####	####	####	####
####	####	####	####	####
####	####	####	####	####
####	####	####	####	####
####	####	####	####	####
####	####	####	####	####
####	####	####	####	####
####	####	####	####	####

SEAL

SEAL

STATE OF CONNECTICUT · KRISTEN E. SOLOMONT · No. 22072 · LICENSED PROFESSIONAL ENGINEER

SCALE:
HORZ.: AS NOTED
VERT.:
DATUM:
HORZ.: -
VERT.: -

FUSS & O'NEILL
146 HARTFORD ROAD
MANCHESTER, CONNECTICUT 06040
860.646.2469
www.fando.com

CITY OF MERIDEN

ELASTOMERIC BEARING PADS

BRIDGE REPLACEMENT AND UTILITY IMPROVEMENTS
BUTLER STREET AND HANOVER STREET
MERIDEN CONNECTICUT

PROJ. No.: 20170932.C11
DATE: FEBRUARY 27, 2024

SA-208

File: J:\DWG\P2017\0932\C11\Structural\Plan\20170932C11_07_BUTLER DECK.dwg Layout: SA-208 Plotted: 2024-02-28 11:53 AM Saved: 2024-02-26 8:27 AM User: JTatar
PC3: AUTOCAD PDF (GENERAL DOCUMENTATION).PC3 STB/CTB: FO.STB
LAYER STATE:
MS VIEW:

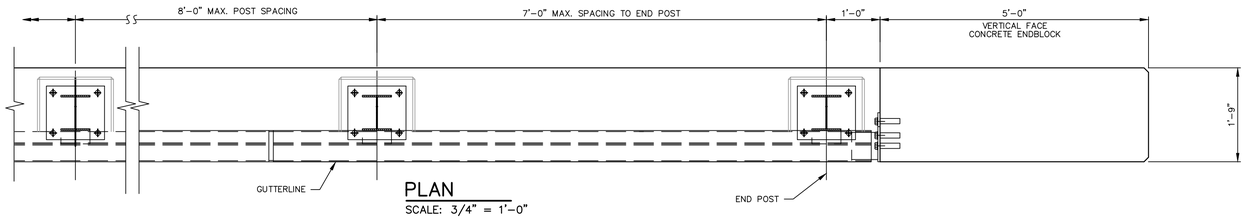

PLAN
SCALE: 3/4" = 1'-0"

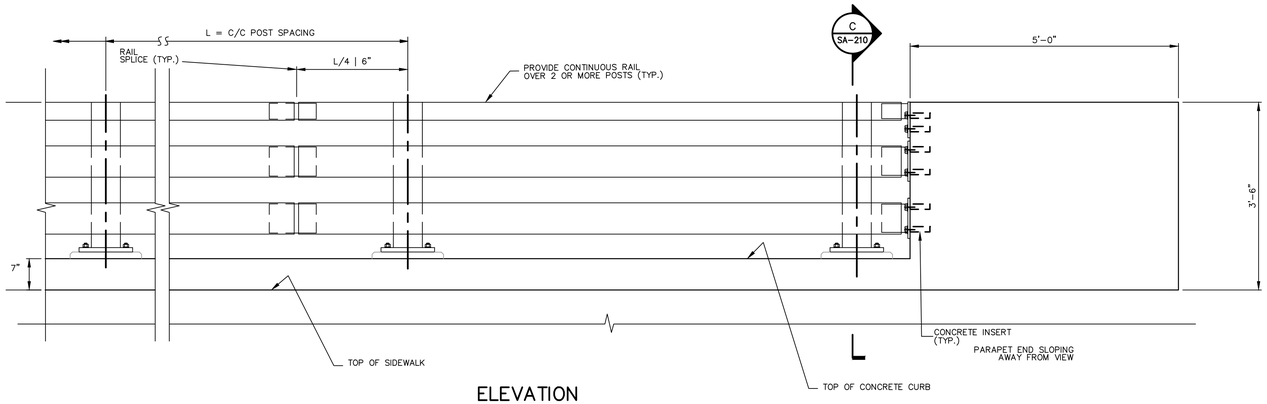

ELEVATION
SCALE: 3/4" = 1'-0"

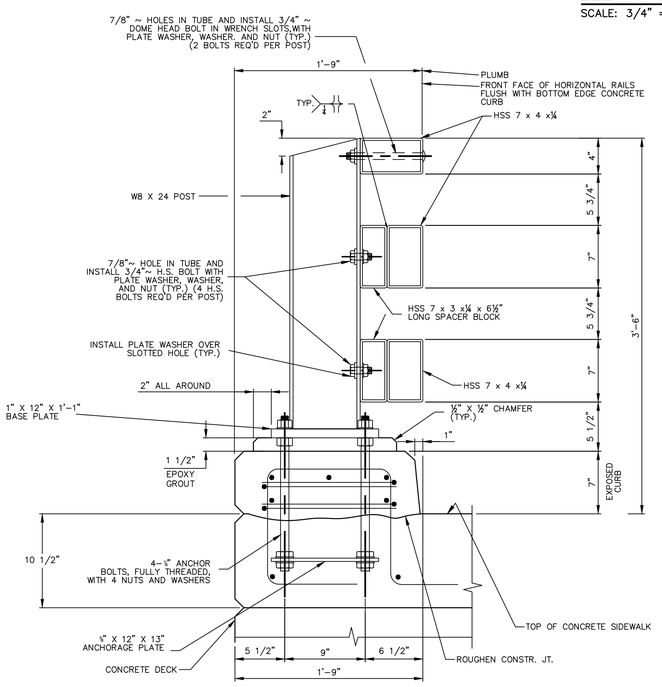

SECTION AT POST
SCALE: 1 1/2" = 1'-0"

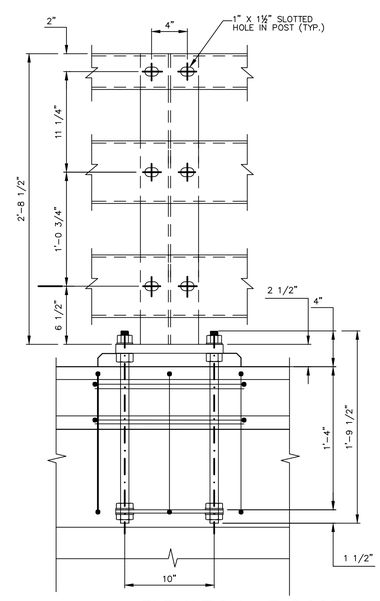

ELEVATION AT POST
SCALE: 1 1/2" = 1'-0"

BRIDGE RAIL NOTES

1. THE 3-TUBE CURB MOUNTED BRIDGE RAIL HAS BEEN EVALUATED AT TEST LEVEL 4 (TL-4) AND COMPLIES WITH MASH 2016.
2. CONCRETE FOR THE CURB AND ENDBLOCK SHALL BE CLASS PCC04462. THE COMPRESSIVE STRENGTH OF THE CONCRETE, BASED ON TEST CYCLINDERS, SHALL BE NO LESS THAN 4,000 PSI PRIOR INSTALLING THE EPOXY GROUT BELOW THE BASEPLATES. PRIOR TO ALLOWING THE RAIL, CURB AND ENDBLOCK TO BE PLACED IN SERVICE FOR THE PROTECTION OF VEHICULAR TRAFFIC, THE COMPRESSIVE STRENGTH OF THE GROUT, BASED ON STRENGTH GAIN OVER TIME LISTED IN THE GROUT MANUFACTURER'S DATA SHEET, SHALL BE NO LESS THAN 5,000 PSI.
3. THE REINFORCEMENT SHALL CONFORM TO ASTM A615, GRADE 60 AND BE HOT-DIP GALVANIZED.
4. THE 1 IN. DIAMETER PIPE SHALL CONFORM TO ASTM A53, GRADE B OR ASTM A501 AND SHALL BE GALVANIZED IN ACCORDANCE WITH THE REQUIREMENTS OF ASTM A123.
5. HOLLOW STRUCTURAL SHAPES SHALL CONFORM TO ASTM A500 GRADE C OR ASTM A501, GRADE B.
6. ALL OTHER STEEL SHALL CONFORM TO ASTM A572, GRADE 50 UNLESS NOTED OTHERWISE.
7. THE SILICON CONTENT OF THE STEEL USED FOR THE EXPOSED MEMBERS AND PLATE COMPONENTS SHALL FALL WITHIN THE RANGE OF 0 TO 0.04% OR 0.15% TO 0.25%.
8. ALL STEEL SHAPES, PLATES AND HOLLOW STRUCTURAL SECTIONS SHALL BE HOT-DIP GALVANIZED IN ACCORDANCE WITH ASTM A123.
9. THE ANCHOR BOLTS SHALL CONFORM TO ASTM F1554, GRADE 105. THE NUTS SHALL CONFORM TO ASTM A563, GRADE DH. THE WASHERS SHALL CONFORM TO ASTM F436. THE BOLTS, NUTS AND WASHERS SHALL BE GALVANIZED IN ACCORDANCE WITH ASTM F2329.
10. ALL HIGH STRENGTH BOLTS SHALL CONFORM TO ASTM F3125 GRADE A325, TYPE 1. NUTS SHALL CONFORM TO ASTM A563, GRADE DH. CIRCULAR, FLAT, HARDENED STEEL WASHERS SHALL CONFORM TO ASTM F436. THE BOLTS, NUTS AND WASHERS SHALL BE GALVANIZED IN ACCORDANCE WITH ASTM F2329 OR ASTM B695, CLASS 55.
11. DOME HEAD BOLTS WITH WRENCH SLOTS USED FOR THE TOP RAIL SHALL CONFORM TO ASTM F3125 GRADE A325, TYPE 1 OR ASTM A449, GRADE 1. SUBSTITUTION OF DOME HEAD BOLTS WITH BOLTS MEETING DIFFERENT MATERIAL REQUIREMENTS IS NOT PERMITTED. NUTS SHALL CONFORM TO ASTM A563, GRADE DH. CIRCULAR, FLAT, HARDENED STEEL WASHERS SHALL CONFORM TO ASTM F436. THE BOLTS, NUTS AND WASHERS SHALL BE GALVANIZED IN ACCORDANCE WITH ASTM F2329 OR ASTM B695, CLASS 55.
12. RAIL ELEMENTS SHALL BE FABRICATED TO THE HORIZONTAL AND VERTICAL ALIGNMENT OF THE STRUCTURE. POSTS SHALL BE INSTALLED NORMAL TO GRADE IN THE LONGITUDINAL DIRECTION AND VERTICAL IN THE TRANSVERSE DIRECTION.
13. ALL BRIDGE RAIL MATERIALS, INCLUDING ANCHOR PLATES, ANCHOR BOLTS, CONCRETE INSERTS, HARDWARE AND EPOXY GROUT, SHALL BE PAID FOR UNDER THE ITEM "3-TUBE CURB MOUNTED BRIDGE RAIL".

No.	DATE	DESCRIPTION	DESIGNER	REVIEWER

SEAL

SEAL

STATE OF CONNECTICUT · BRIDGE ENGINEER · No. 22072 · LICENSED PROFESSIONAL ENGINEER

SCALE:
HORZ.: AS NOTED
VERT.: AS NOTED
DATUM:
HORZ.: NAD 83
VERT.: NAVD 88
0
GRAPHIC SCALE

FUSS & O'NEILL
146 HARTFORD ROAD
MANCHESTER, CONNECTICUT 06040
860.646.2469
www.fando.com

CITY OF MERIDEN
BUTLER STREET BRIDGE
BARRIER DETAILS I
BRIDGE REPLACEMENT AND UTILITY IMPROVEMENTS
BUTLER STREET AND HANOVER STREET
MERIDEN CONNECTICUT

PROJ. No.: 20170932.C11
DATE: FEBRUARY 27, 2024

SA-209

File: J:\DWG\P2017\0932\C11\Structural\Plan\20170932C11_00_BARRIER DETAILS.dwg Layout: SA-209 Plotted: 2024-02-28 11:53 AM Saved: 2024-02-26 8:27 AM User: JTatar
PC3: AUTOCAD PDF (GENERAL DOCUMENTATION).PC3 STB/CTB: FO.STB
LAYER STATE:
MS VIEW:

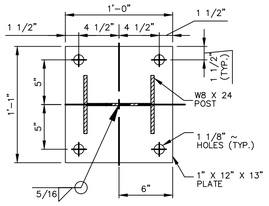

BASE PLATE DETAIL
SCALE: 1 1/2" = 1'-0"

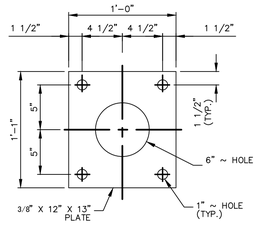

ANCHOR PLATE DETAIL
SCALE: 1 1/2" = 1'-0"

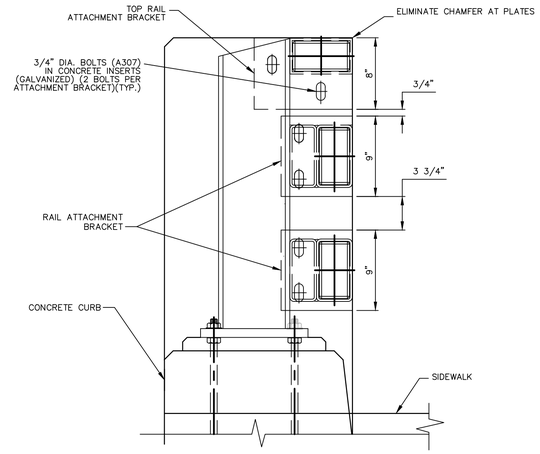

C SECTION
SCALE: 1 1/2" = 1'-0"

CURB AND POST DETAILS

THE CONCRETE INSERTS SHALL BE HOT-DIP GALVANIZED, EXPANDED COIL CONCRETE INSERTS WITH A CLOSED-BACK. THE INSERTS SHALL BE THREADED TO RECEIVE 3/4" DIA. ASTM A307 BOLTS. THE INSERTS SHALL MEET THE FOLLOWING REQUIREMENTS:

MINIMUM INSERT LENGTH = 4 1/2"
MINIMUM SAFE WORKING LOAD IN TENSION = 4000 LBS.

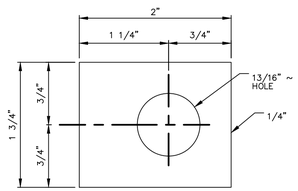

PLATE WASHER "C"
SCALE: 1" = 1"

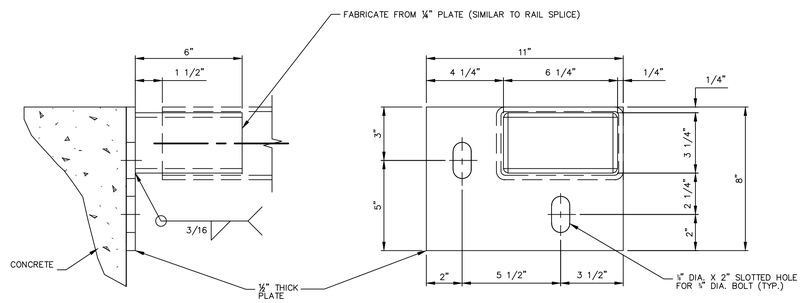

TOP RAIL ATTACHMENT BRACKET
SCALE: 3" = 1'-0"

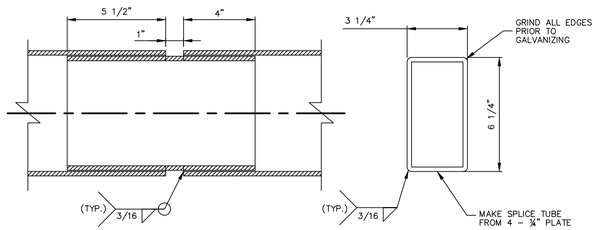

RAIL SPLICE DETAILS
SCALE: 3" = 1'-0"

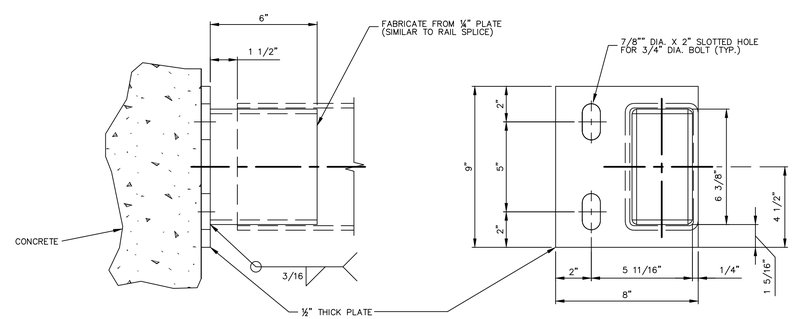

RAIL ATTACHMENT BRACKET
SCALE: 3" = 1'-0"

File: J:\DWG\P2017\0932\C11\Structural\Plan\20170932C11_00_BARRIER DETAILS.dwg Layout: SA-210 Plotted: 2024-02-28 11:53 AM Saved: 2024-02-26 8:27 AM User: JTatar
MS VIEW: LAYER STATE: PC3: AUTOCAD PDF (GENERAL DOCUMENTATION).PC3 STB/CTB: FO.STB

No.	DATE	DESCRIPTION	DESIGNER	REVIEWER

SEAL

SEAL

STATE OF CONNECTICUT KRISTEN E. SOLOWAY No. 22072 LICENSED PROFESSIONAL ENGINEER

SCALE:
HORZ.: AS NOTED
VERT.: AS NOTED
DATUM:
HORZ.: NAD 83
VERT.: NAVD 88
0
GRAPHIC SCALE

FUSS & O'NEILL
146 HARTFORD ROAD
MANCHESTER, CONNECTICUT 06040
860.646.2469
www.fando.com

CITY OF MERIDEN
BUTLER STREET BRIDGE
BARRIER DETAILS II
BRIDGE REPLACEMENT AND UTILITY IMPROVEMENTS
BUTLER STREET AND HANOVER STREET
MERIDEN CONNECTICUT

PROJ. No.: 20170932.C11
DATE: FEBRUARY 27, 2024

SA-210

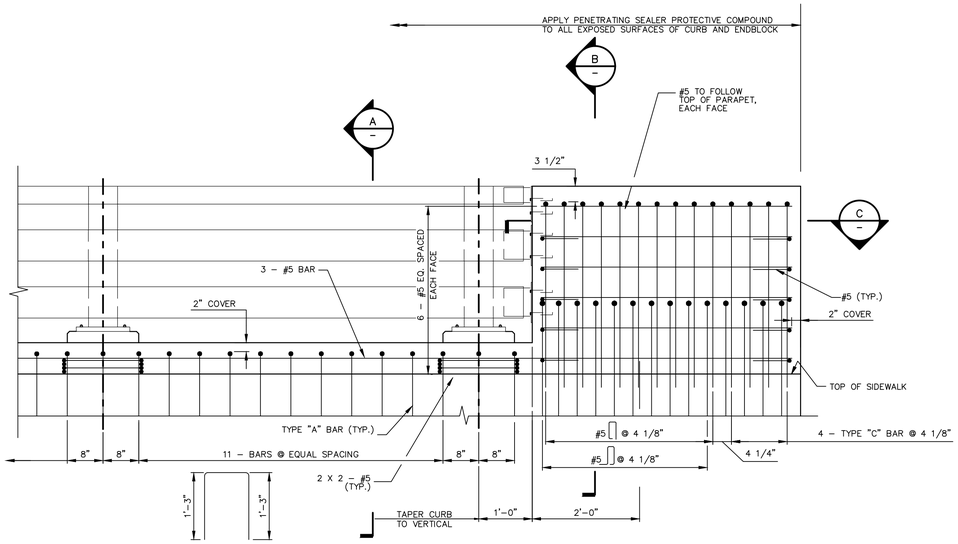

ELEVATION – CURB AND ENDBLOCK REINFORCEMENT
SCALE: 3/4" = 1'-0"

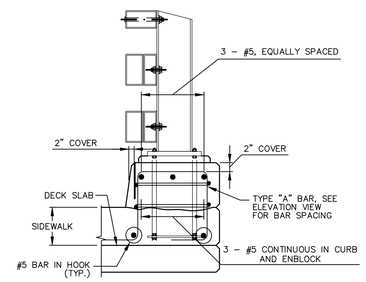

A SECTION
SCALE: 3/4" = 1'-0"

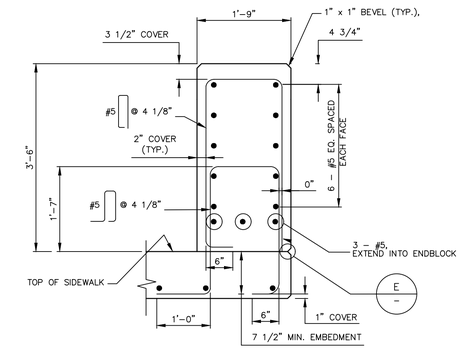

B SECTION
SCALE: 3/4" = 1'-0"

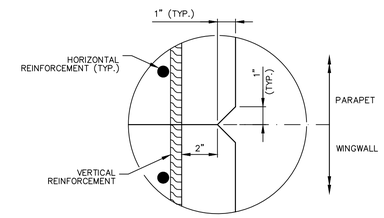

E TYPICAL RUSTICATION DETAIL
SCALE: 3" = 1'-0"

REINFORCEMENT SPLICE NOTES:

1. THE SPLICE LENGTH FOR THE LONGITUDINAL REINFORCEMENT IN THE CURB AND ENDBLOCK SHALL BE AS FOLLOWS UNLESS DIMENSIONED OTHERWISE:

BAR SIZE	SPLICE LENGTH
#5	2'-4"

2. THE SPLICES SHALL BE ALTERNATED SO THAT 50% OR LESS OF THE LONGITUDINAL BARS ARE SPLICED AT THE SAME LOCATION.

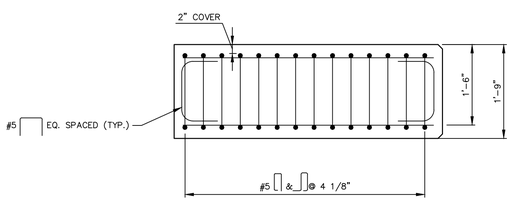

C PLAN SECTION – ENDBLOCK REINFORCEMENT AT BUTLER ST.
SCALE: 3/4" = 1'-0"

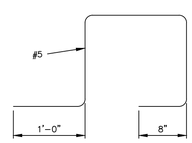

TYPE "A" BAR
SCALE: N.T.S.

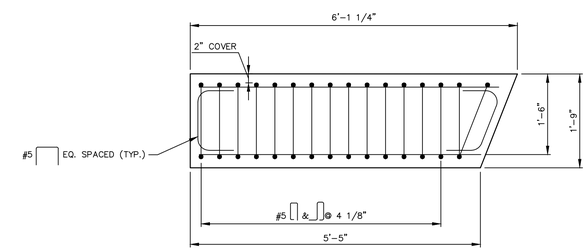

C PLAN SECTION – ENDBLOCK REINFORCING AT HANOVER ST
SCALE: 3/4" = 1'-0"

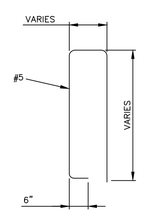

TYPE "C" BAR
SCALE: N.T.S.

No.	DATE	DESCRIPTION	DESIGNER	REVIEWER

SEAL

SEAL

STATE OF CONNECTICUT REGISTERED PROFESSIONAL ENGINEER No. 22072

SCALE:
HORZ.: AS NOTED
VERT.: AS NOTED
DATUM:
HORZ.: NAD 83
VERT.: NAVD 88
0
GRAPHIC SCALE

FUSS & O'NEILL
146 HARTFORD ROAD
MANCHESTER, CONNECTICUT 06040
860.646.2469
www.fando.com

CITY OF MERIDEN
BUTLER STREET BRIDGE
BARRIER DETAILS III
BRIDGE REPLACEMENT AND UTILITY IMPROVEMENTS
BUTLER STREET AND HANOVER STREET
MERIDEN CONNECTICUT

PROJ. No.: 20170932.C11
DATE: FEBRUARY 27, 2024

SA-211

File: J:\DWG\P\20170932\C11\Structural\Plan\20170932C11_00_BARRIER DETAILS.dwg Layout: SA-211 Plotted: 2024-02-28 11:53 AM Saved: 2024-02-26 8:27 AM User: JTatar
PC3: AUTOCAD PDF (GENERAL DOCUMENTATION).PC3 STB/CTB: FO.STB
LAYER STATE:
MS VIEW:

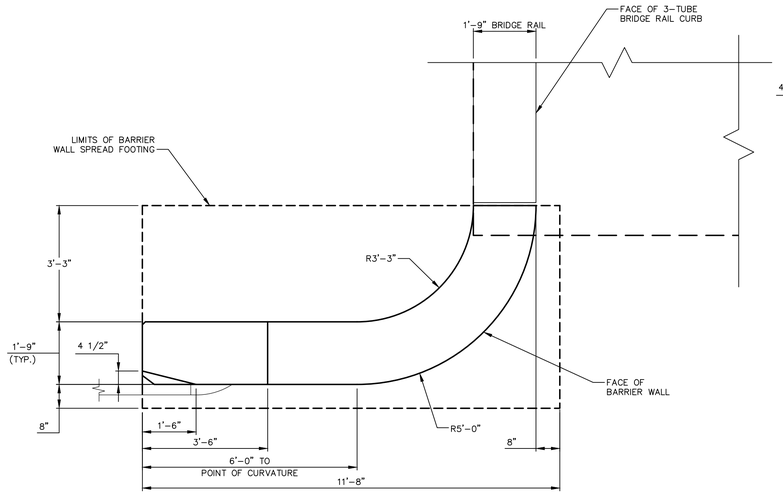

NOTE: NORTH SIDE SHOWN, SOUTH SIDE SIMILAR

BARRIER PLAN
SCALE: 1/2" = 1'-0"

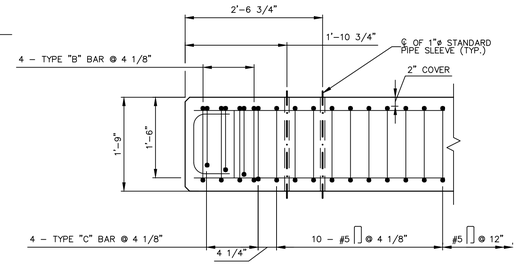

C PLAN SECTION - ENDBLOCK REINFORCEMENT
SCALE: 3/4" = 1'-0"

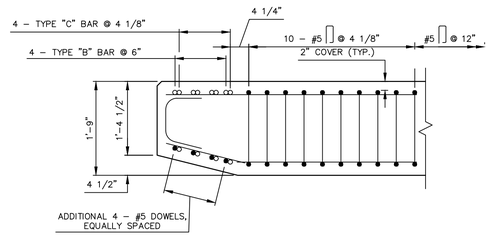

D PLAN SECTION - ENDBLOCK REINFORCEMENT
SCALE: 3/4" = 1'-0"

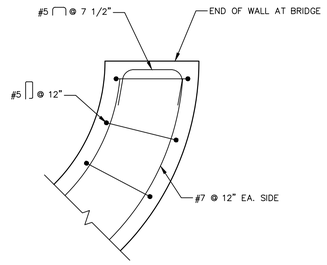

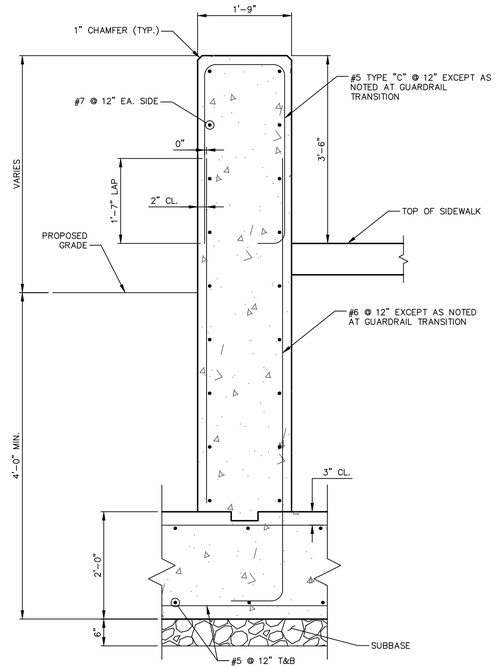

TYPICAL BARRIER SECTION
SCALE: 3/4" = 1'-0"

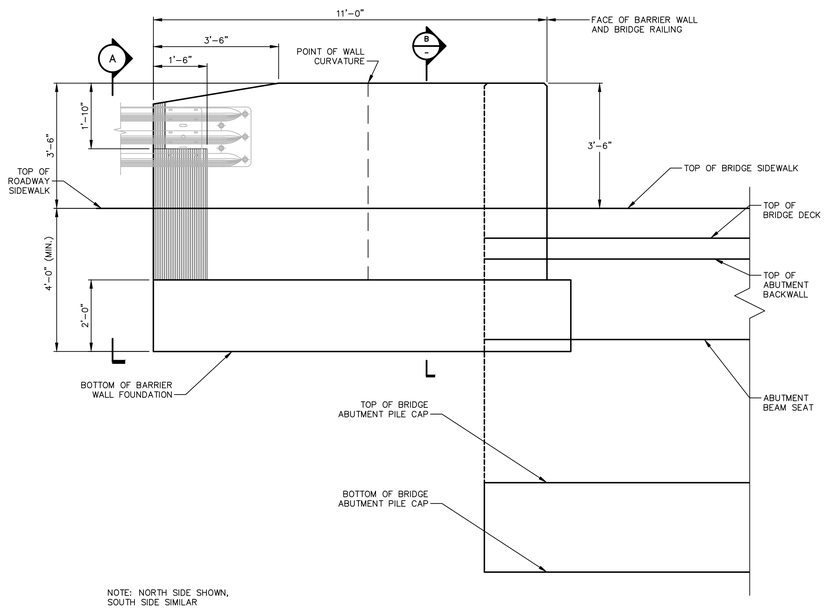

NOTE: NORTH SIDE SHOWN, SOUTH SIDE SIMILAR

BARRIER ELEVATION
SCALE: 1/2" = 1'-0"

REINFORCEMENT SPLICE NOTES:

1. THE SPLICE LENGTH FOR THE LONGITUDINAL REINFORCEMENT IN THE CURB AND ENDBLOCK SHALL BE AS FOLLOWS UNLESS DIMENSIONED OTHERWISE:

BAR SIZE	SPLICE LENGTH
#5	2'-4"

2. THE SPLICES SHALL BE ALTERNATED SO THAT 50% OR LESS OF THE LONGITUDINAL BARS ARE SPLICED AT THE SAME LOCATION.

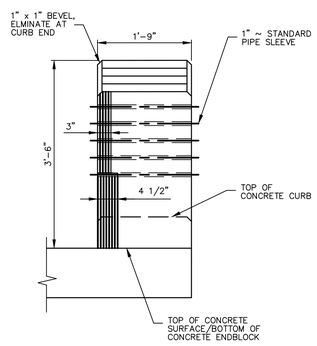

A SECTION
SCALE: 3/4" = 1'-0"

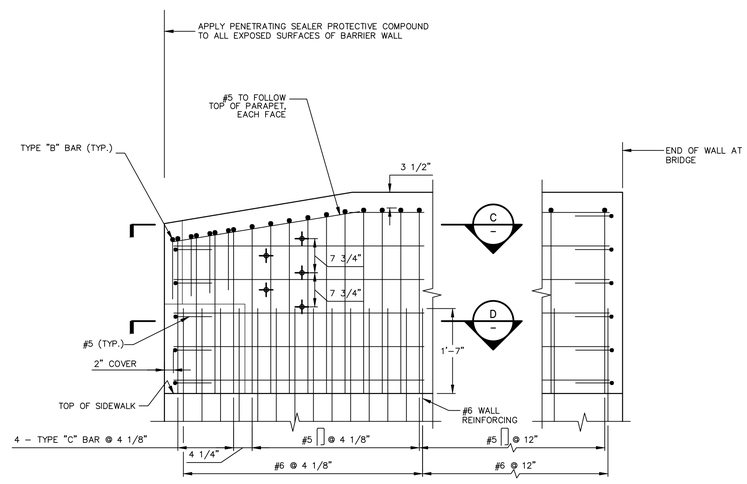

ELEVATION - BARRIER END REINFORCEMENT
SCALE: 3/4" = 1'-0"

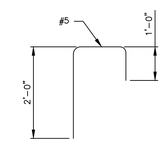

TYPE "B" BAR
SCALE: N.T.S.

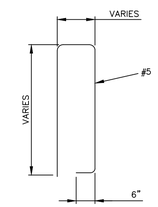

TYPE "C" BAR
SCALE: N.T.S.

No.	DATE	DESCRIPTION	DESIGNER	REVIEWER

SEAL

SEAL

SCALE:
HORZ.: AS NOTED
VERT.: AS NOTED
DATUM:
HORZ.: NAD 83
VERT.: NAVD 88
0
GRAPHIC SCALE

FUSS & O'NEILL
146 HARTFORD ROAD
MANCHESTER, CONNECTICUT 06040
860.646.2469
www.fando.com

CITY OF MERIDEN
BUTLER STREET BRIDGE
BARRIER DETAILS IV
BRIDGE REPLACEMENT AND UTILITY IMPROVEMENTS
BUTLER STREET AND HANOVER STREET
MERIDEN CONNECTICUT

PROJ. No.: 20170932.C11
DATE: FEBRUARY 27, 2024

SA-212

File: J:\DWG\P20170932\C11\StructuralPlan\20170932C11_00_BARRIER DETAILS.dwg Layout: SA-212 Plotted: 2024-02-28 11:53 AM Saved: 2024-02-26 8:27 AM User: JTatar
PC3: AUTOCAD PDF (GENERAL DOCUMENTATION).PC3 STB/CTB: FO.STB
LAYER STATE:
MS VIEW:

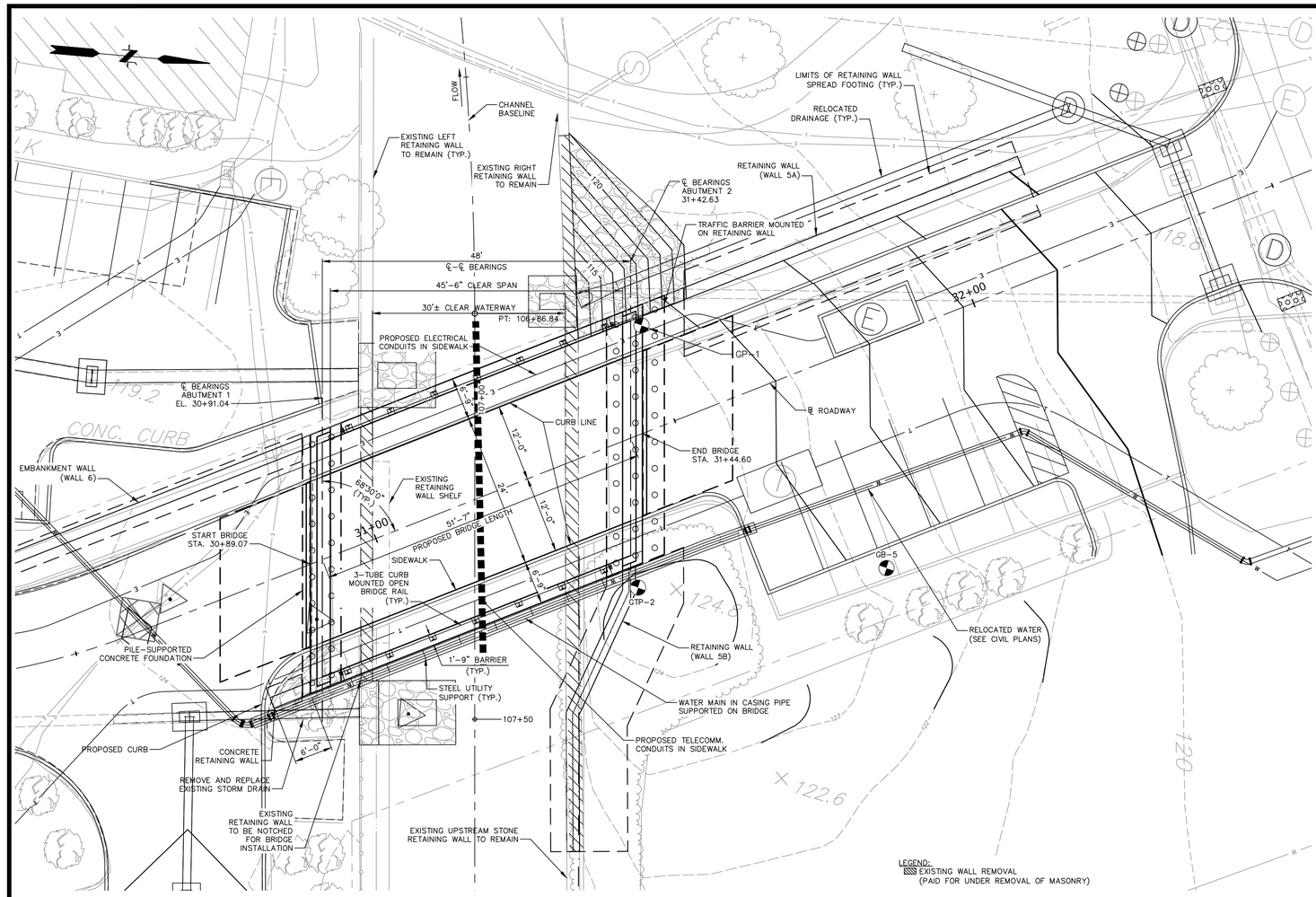

LEGEND:
EXISTING WALL REMOVAL
(PAID FOR UNDER REMOVAL OF MASONRY)

PLAN
1" = 10'–0"

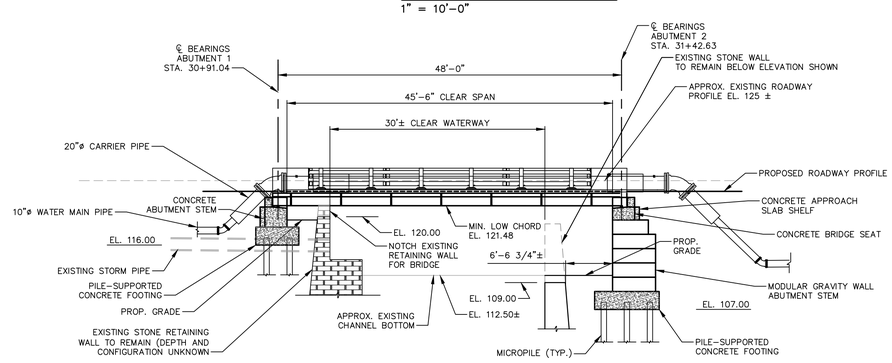

ELEVATION
1" = 10'–0"

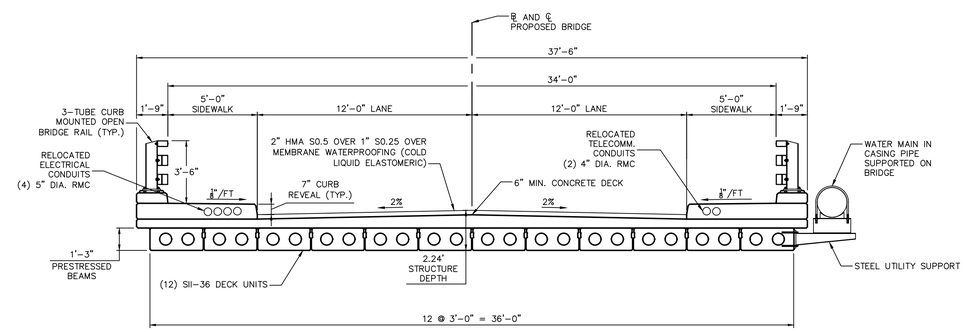

SECTION LOOKING UPSTATION
1" = 4'–0"

LEGEND:
BORING LOCATION

GENERAL NOTES:

SPECIFICATIONS: CONNECTICUT DEPARTMENT OF TRANSPORTATION FORM 818 (2020), SUPPLEMENTAL SPECIFICATIONS DATED JULY 2022 AND SPECIAL PROVISIONS.

DESIGN SPECIFICATIONS: AASHTO LRFD BRIDGE DESIGN SPECIFICATIONS (9TH EDITION – 2020), AS SUPPLEMENTED BY THE CONNECTICUT DEPARTMENT OF TRANSPORTATION BRIDGE DESIGN MANUAL (2003).

MATERIAL STRENGTHS:
CONCRETE:
CLASS PCC 03340 ..... F'C = 3,000 PSI
CLASS PCC 04462 ..... F'C = 4,000 PSI
CLASS PCC 04460 ..... F'C = 4,000 PSI

THE SPECIFIED CONCRETE STRENGTH USED IN DESIGN, F'C, OF THE CONCRETE COMPONENTS IS NOTED ABOVE. THE MINIMUM COMPRESSIVE STRENGTH OF THE CONCRETE IN THE CONSTRUCTED COMPONENTS SHALL CONFORM TO THE REQUIREMENTS OF SECTION 6.01 CONCRETE FOR STRUCTURES.

REINFORCEMENT
(ASTM A615 GRADE 60) ..... FY = 60,000 PSI

LIVE LOAD: HL–93, LEGAL AND PERMIT VEHICLES

FUTURE PAVING ALLOWANCE: NONE

BITUMINOUS CONCRETE OVERLAY: THIS SHALL CONSIST OF TWO COURSES OF TRAFFIC LEVEL 2 MIXES. THE BOTTOM COURSE SHALL BE HOT MIX ASPHALT (HMA S0.25) AND SHALL BE 1". THE TOP COURSE SHALL BE HOT MIX ASPHALT (2" HMA S0.5).

DIMENSIONS: WHEN DIMENSIONS ARE GIVEN TO LESS THAN THREE DECIMAL PLACES, THE OMITTED DIGITS SHALL BE ASSUMED TO BE ZEROS.

EXISTING DIMENSIONS: DIMENSIONS OF THE EXISTING STRUCTURE SHOWN ON THESE PLANS ARE FOR GENERAL REFERENCE ONLY. THEY HAVE BEEN TAKEN FROM THE ORIGINAL DESIGN DRAWINGS AND ARE NOT GUARANTEED. THE CONTRACTOR SHALL TAKE ALL FIELD MEASUREMENTS NECESSARY TO ASSURE PROPER FIT OF THE FINISHED WORK AND SHALL ASSUME FULL RESPONSIBILITY FOR THEIR ACCURACY. WHEN SHOP DRAWINGS BASED ON FIELD MEASUREMENTS ARE SUBMITTED FOR REVIEW, THE FIELD MEASUREMENTS SHALL ALSO BE SUBMITTED FOR REFERENCE BY THE REVIEWER.

MASH TEST LEVEL: THE 3 TUBE CURB MOUNTED MEETS THE TL–4 CRITERIA FOR MASH 2016.

CONCRETE NOTES:

REMAIN–IN–PLACE FORMS: THE USE OF REMAIN–IN–PLACE FORMS ON THIS STRUCTURE IS NOT ALLOWED.

PENETRATING SEALER: PENETRATING SEALER PROTECTIVE COMPOUND SHALL BE APPLIED TO ALL EXPOSED SURFACES, INCLUDING CURBS, SEE SPECIAL PROVISIONS.

EXPOSED EDGES: EXPOSED EDGES OF CONCRETE SHALL BE BEVELED 1" X 1" UNLESS DIMENSIONED OTHERWISE.

CONCRETE COVER: ALL REINFORCEMENT SHALL HAVE TWO INCHES COVER UNLESS DIMENSIONED OTHERWISE.

REINFORCEMENT: ALL REINFORCEMENT SHALL BE ASTM A615 GRADE 60.

GALVANIZED REINFORCING BARS: ALL REINFORCEMENT SHALL BE GALVANIZED AFTER FABRICATION UNLESS NOTED OTHERWISE. ALL REINFORCEMENT SHALL CONFORM TO THE EQUIREMENTS OF ASTM A767, CLASS 1, INCLUDING SUPPLEMENTAL REQUIREMENTS. THE COST OF FURNISHING AND PLACING THIS REINFORCEMENT SHALL BE INCLUDED IN THE ITEM "DEFORMED STEEL BARS – GALVANIZED."

CONSTRUCTION JOINTS: CONSTRUCTION JOINTS, OTHER THAN THOSE SHOWN ON THE PLANS WILL NOT BE PERMITTED WIHOUT THE PRIOR APPROVAL OF THE ENGINEER.

PRECAST CONCRETE NOTES:

THE CONTRACTOR SHALL MANUFACTURE AND CONSTRUCT PRESTRESSED DECK UNITS IN ACCORDANCE WITH THE SPECIAL PROVISIONS FOR "PRESTRESSED DECK UNITS" TO THE INSIDE DIMENSIONS, LENGTH AND DETAILS SHOWN ON THESE PLANS.

ALL INSERTS OR HOLES CAST INTO THE DECK UNITS FOR THE SOLE PURPOSE OF HANDLING AND SETTING THE UNITS SHALL BE SEALED WITH GROUT TO A SMOOTH FINISH UPON COMPLETION OF THE WORK.

THE COST OF FURNISHING AND INSTALLING THE INSERTS SHALL BE INCLUDED IN THE ITEM "PRESTRESSED DECK UNIT" CORRESPONDING TO EACH SIZE. ALL INSERTS SHALL HAVE A CORROSIVE RESISTANT COATING.

ALL REINFORCEMENT TO HAVE 2" COVER UNLESS OTHERWISE NOTED.

CONCRETE DISTRIBUTION		
SUPERSTRUCTURE (NOT INCLUDING PARAPETS)	C.Y.	103
SUBSTRUCTURE	C.Y.	31
APPROACH SLAB	C.Y.	40
FOOTINGS	C.Y.	78
TOTAL	C.Y.	252

No.	DATE	DESCRIPTION	DESIGNER	REVIEWER

SEAL

SEAL
STATE OF CONNECTICUT · KRISTEN E. SOLOMONT · No. 22072 · LICENSED PROFESSIONAL ENGINEER

SCALE:
HORZ.: AS NOTED
VERT.: AS NOTED
DATUM:
HORZ.: NAD 83
VERT.: NAVD 88
0
GRAPHIC SCALE

FUSS & O'NEILL
146 HARTFORD ROAD
MANCHESTER, CONNECTICUT 06040
860.646.2469
www.fando.com

CITY OF MERIDEN
HANOVER STREET BRIDGE
GENERAL PLAN & ELEVATION
BRIDGE REPLACEMENTS AND UTILITY IMPROVEMENTS
BUTLER STREET AND HANOVER STREET
MERIDEN CONNECTICUT

PROJ. No.: 20170932.C11
DATE: FEBRUARY 27, 2024
SA-301

File Path: J:\DWG\P2017\0932\C11\Structural\Plan\20170932C11_04_HANOVER PLAN.dwg Layout: SA-301-PH1 Plotted: Wed, February 28, 2024 - 11:54 AM User: astripsky
Plotter: AUTOCAD PDF (GENERAL DOCUMENTATION).PC3 CTB File: FO.STB
LAYER STATE:
MS VIEW:

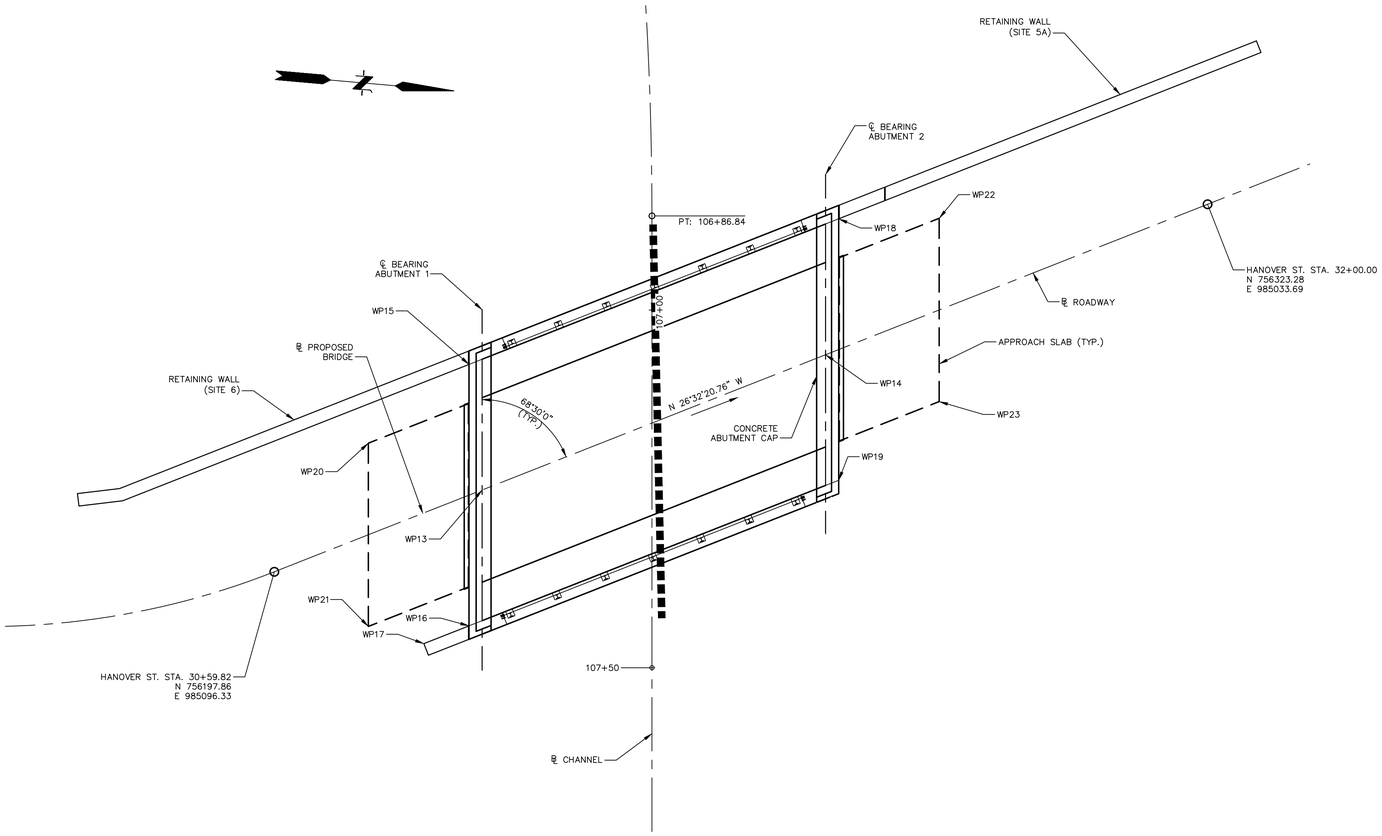

BRIDGE LAYOUT

1" = 10'-0"

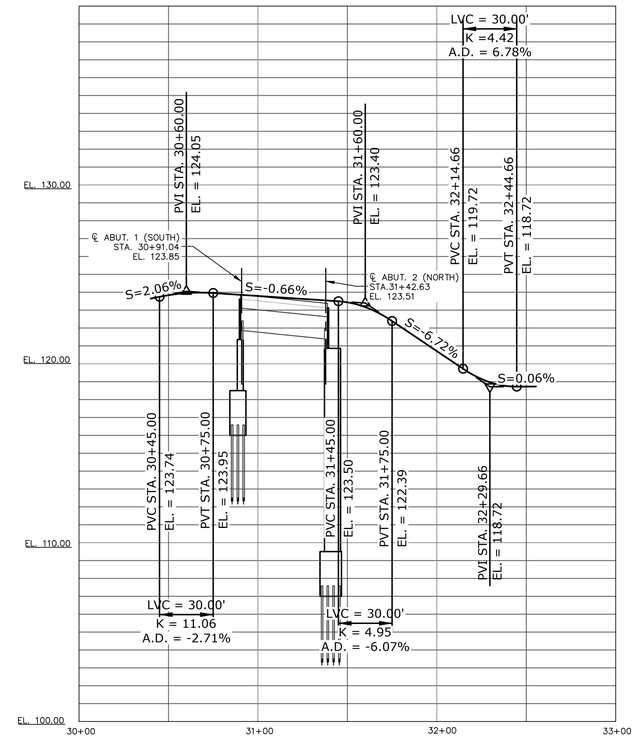

BRIDGE ROADWAY PROFILE VIEW

HORIZONTAL: 1" = 40'-0"
VERTICAL: 1" = 4'-0"

WP #	COORDINATES		STATION	OFFSET
	NORTHING	EASTING		
13	756218.199	985067.166	30+91.04	0.00
14	756271.949	985059.324	31+42.63	0.00
15	756222.427	985065.053	30+95.76	-17.00
16	756225.637	985101.456	30+82.37	17.00
17	756219.573	985104.485	30+75.59	17.00
18	756272.107	985040.242	31+51.29	-17.00
19	756275.317	985076.645	31+37.90	17.00
20	756209.380	985077.255	30+78.64	-11.91
21	756211.630	985102.772	30+69.25	11.92
22	756286.086	985038.943	31+64.38	-11.92
23	756288.336	985064.460	31+54.99	11.92

ITEM	BRIDGE COMPONENTS	PCC CLASS
FOOTING CONCRETE	ABUTMENT AND WINGWALL FOOTINGS	PCC03340
ABUTMENT AND WALL CONCRETE	ABUTMENT AND WINGWALL STEMS KEEPER BLOCKS, CHEEKWALLS, BARRIER WALLS	PCC03340
BRIDGE DECK CONCRETE	BRIDGE DECK	PCC04462
PARAPET CONCRETE	END BLOCKS AND CURBS	PCC04462
APPROACH SLAB CONC.	APPROACH SLABS	PCC04460

HYDRAULIC SUMMARY DATA		
DRAINAGE AREA (MI^2)	11.2	
DESIGN FREQUENCY (YEAR)	100	
DESIGN DISCHARGE (CFS)	3289	
AVERAGE DAILY FLOW ELEVATION (FT)	UPSTREAM	DOWNSTREAM
	112.7	107.5
DESIGN WATER SURFACE ELEVATION (FT)	UPSTREAM	DOWNSTREAM
	119.3	119.8
MAXIMUM SCOUR ELEVATION (FT)	N/A	
WORST CASE SCOUR SUBSTRUCTURE UNIT	N/A	

No.	DATE	DESCRIPTION	DESIGNER	REVIEWER

SEAL

SEAL

STATE OF CONNECTICUT BRIDGE ENGINEER No. 22072 LICENSED PROFESSIONAL ENGINEER

SCALE:
HORZ.: AS NOTED
VERT.: AS NOTED
DATUM:
HORZ.: NAD 83
VERT.: NAVD 88
0
GRAPHIC SCALE

FUSS & O'NEILL
146 HARTFORD ROAD
MANCHESTER, CONNECTICUT 06040
860.646.2469
www.fando.com

CITY OF MERIDEN

HANOVER STREET BRIDGE
LAYOUT PLAN

BRIDGE REPLACEMENTS AND UTILITY IMPROVEMENTS
BUTLER STREET AND HANOVER STREET

MERIDEN CONNECTICUT

PROJ. No.: 20170932.C11
DATE: FEBRUARY 27, 2024

SA-302

File Path: J:\DWG\P\20170932\C11\Structural\Plan\20170932C11_04_HANOVER PLAN.dwg Layout: SA-302-PH1 Plotted: Wed, February 28, 2024 - 11:54 AM User: astripsky
Plotter: AUTOCAD PDF (GENERAL DOCUMENTATION).PC3 CTB File: FO.STB
LAYER STATE:
MS VIEW:

MICROPILE TESTING NOTES:

1. MICROPILES NOTED THUS: ⊕ INDICATE SUGGESTED TEST LOCATIONS.
2. ONE VERIFICATION TEST SHALL BE PERFORMED PER BRIDGE, CENTRALLY LOCATED ON EITHER OF THE TWO ABUTMENTS.

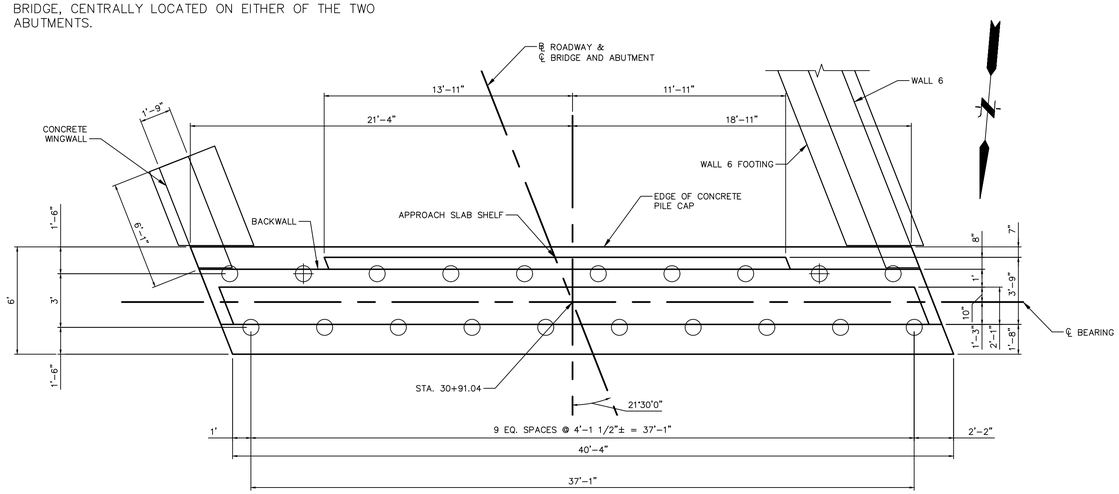

ABUTMENT 1 (SOUTH) PLAN

1/4" = 1'-0"

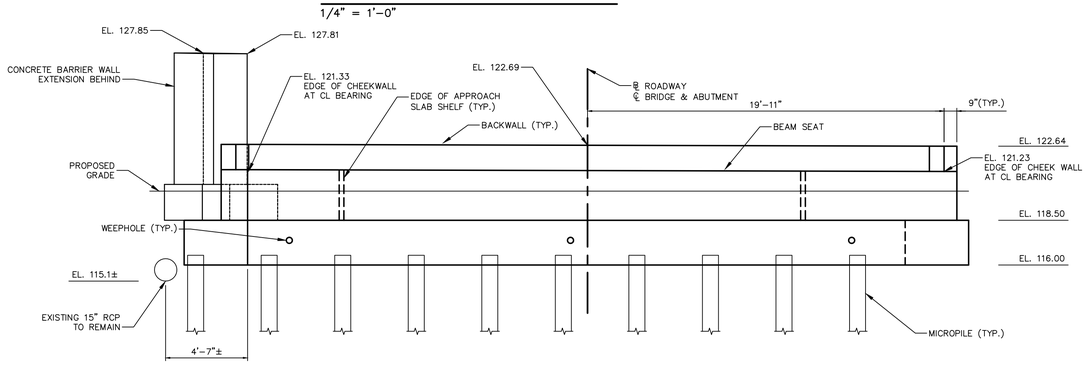

ABUTMENT 1 (SOUTH) ELEVATION

1/4" = 1'-0"

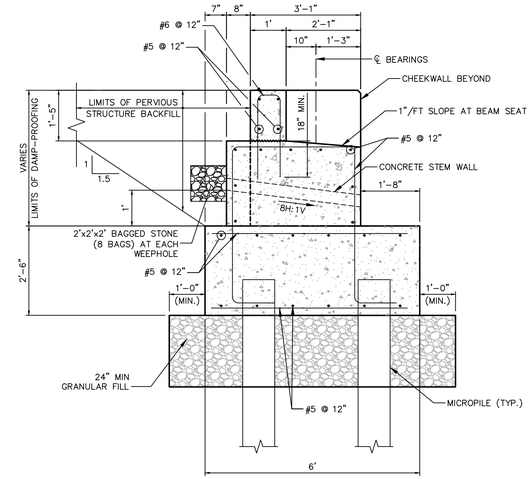

TYPICAL SECTION – ABUTMENT 1

1/2" = 1'-0"

MICROPILE NOTES:

1. THE MICROPILE DESIGN PROVIDED ON THESE DRAWINGS IS BASED ON THE LOADS AND RESISTANCES SHOWN IN THE TABLE ABOVE.
2. THE MICROPILES SHALL BE DESIGNED USING PERMANENT STEEL CASINGS. THE CASINGS SHALL EXTEND INTO BEDROCK.
3. THE 10 3/4" CASING SHALL BE INSTALLED WITH NO CASING JOINTS WITHIN 10 FEE BELOW THE BOTTOM OF THE PILE CAP.
4. FOR MICROPILE DETAILS, REFER TO DRAWING NO. SA-204.

MICROPILE DESIGN TABLE ABUTMENT 1	
NOMINAL RESISTANCE	110 KIPS
RESISTANCE FACTOR	0.50
FACTORED PILE RESISTANCE	55 KIPS

MICROPILE DESIGN TABLE ABUTMENT 2	
NOMINAL RESISTANCE	158 KIPS
RESISTANCE FACTOR	0.50
FACTORED PILE RESISTANCE	79 KIPS

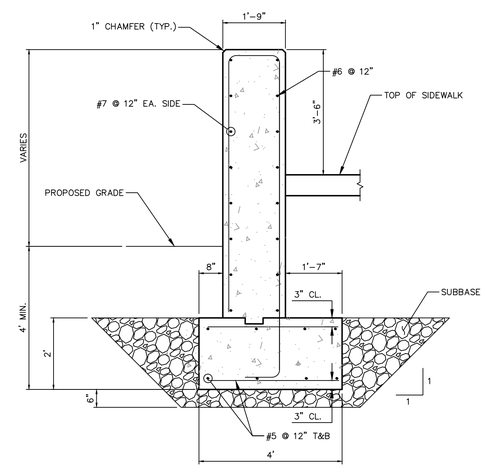

CONCRETE WINGWALL SECTION

1/2" = 1'-0"

No.	DATE	DESCRIPTION	DESIGNER	REVIEWER

SEAL

SEAL

STATE OF CONNECTICUT · KRISTEN E. SOUCHAK · No. 22072 · LICENSED PROFESSIONAL ENGINEER

SCALE:
HORZ.: AS NOTED
VERT.: AS NOTED
DATUM:
HORZ.: NAD 83
VERT.: NAVD 88
0
GRAPHIC SCALE

FUSS & O'NEILL
146 HARTFORD ROAD
MANCHESTER, CONNECTICUT 06040
860.646.2469
www.fando.com

CITY OF MERIDEN
HANOVER STREET BRIDGE
ABUTMENT 1
BRIDGE REPLACEMENT AND UTILITY IMPROVEMENTS
BUTLER STREET AND HANOVER STREET
MERIDEN CONNECTICUT

PROJ. No.: 20170932C11
DATE: FEBRUARY 27, 2024

SA-303

File Path: J:\DWG\P2017\0932\C11\Structural\Plan\20170932C11_08_HANOVER ABUT.dwg Layout: SA-303 Plotted: Wed, February 28, 2024 - 11:55 AM User: astrpsky
MS VIEW: LAYER STATE: Plotter: AUTOCAD PDF (GENERAL DOCUMENTATION).PC3 CTB File: FO.STB

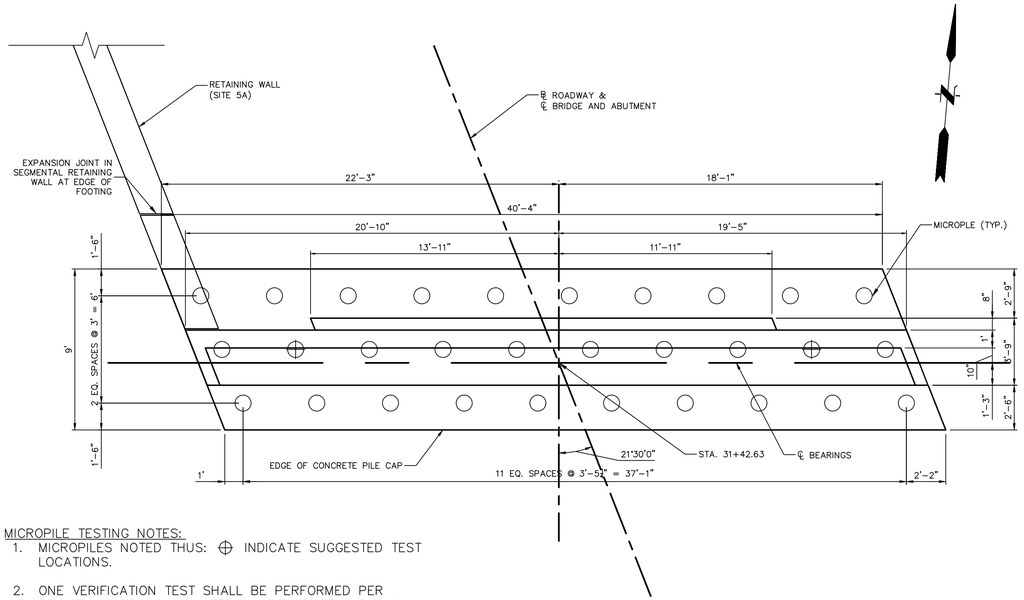

MICROPILE TESTING NOTES:

1. MICROPILES NOTED THUS: ⊕ INDICATE SUGGESTED TEST LOCATIONS.
2. ONE VERIFICATION TEST SHALL BE PERFORMED PER BRIDGE, CENTRALLY LOCATED ON EITHER OF THE TWO ABUTMENTS.

ABUTMENT 2 (NORTH) PLAN

1/4" = 1'-0"

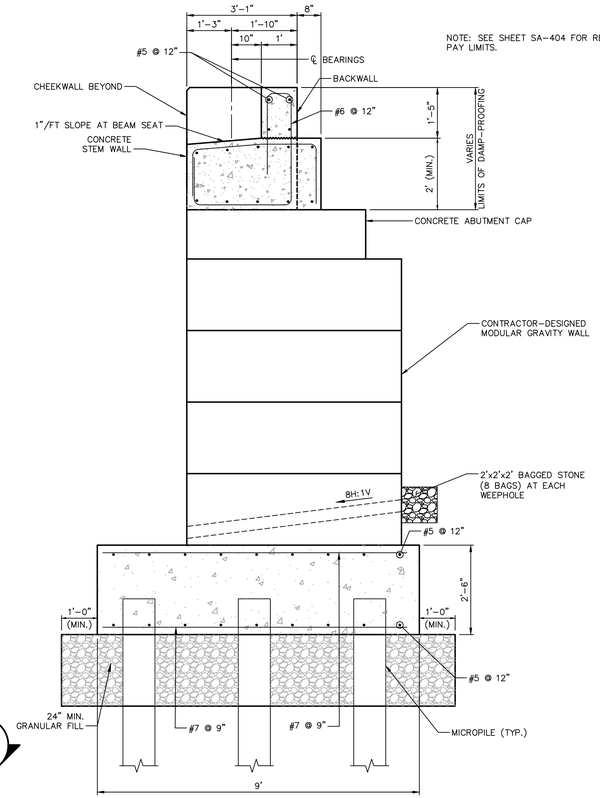

TYPICAL SECTION – ABUTMENT 2

1/2" = 1'-0"

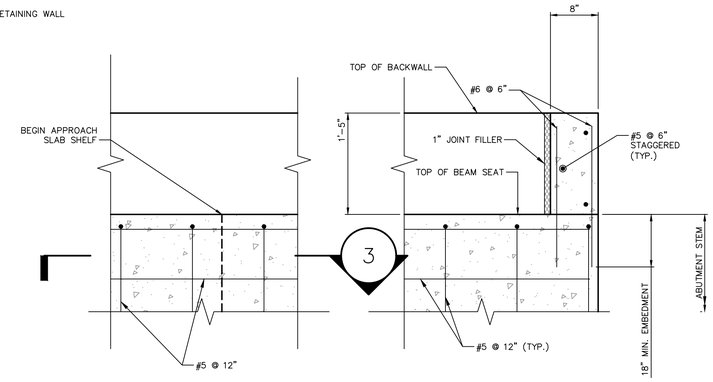

SECTION 2

1" = 1'-0"

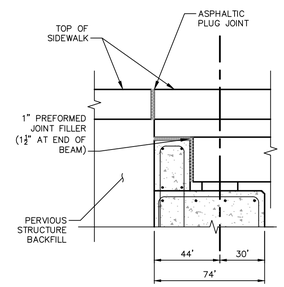

BACKWALL DETAIL AT SIDEWALK

N.T.S.

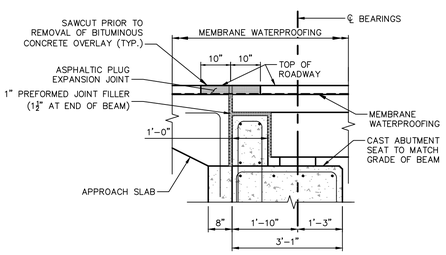

BACKWALL DETAIL AT APPROACH SLAB

N.T.S.

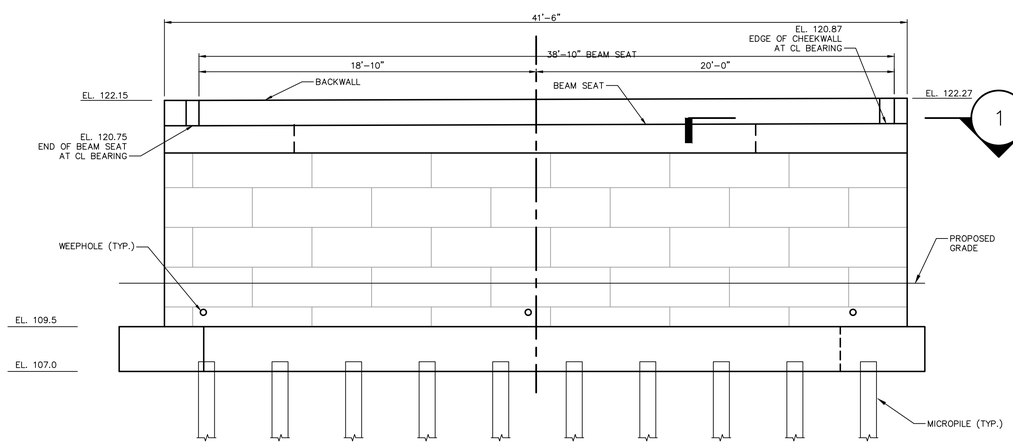

ABUTMENT 2 (NORTH) ELEVATION

1/4" = 1'-0"

BRIDGE ABUTMENT LOADING:

THE CONTRACTOR-DESIGNED MODULAR WALLS SHALL BE DESIGNED FOR THE FOLLOWING LOADS, FACTORED IN ACCORDANCE WITH THE LOAD COMBINATIONS IN THE AASHTO LRFD BRIDGE DESIGN SPECIFICATIONS.

STRENGTH: 17.1 KLF
SERVICE: 12.0 KLF

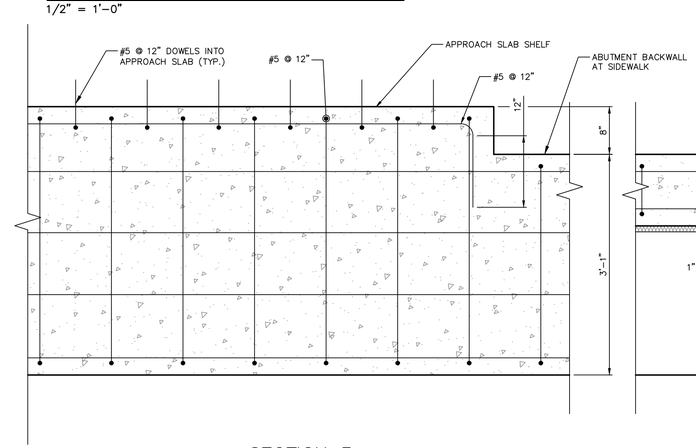

SECTION 3

1" = 1'-0"

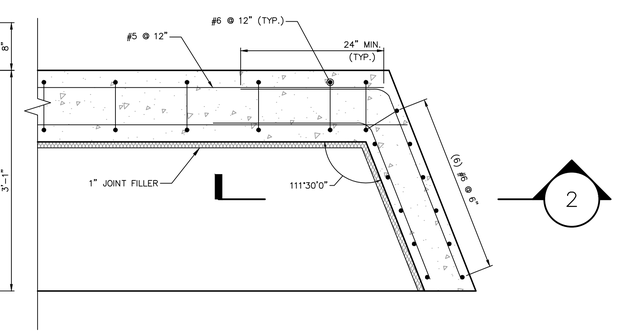

SECTION 1

1" = 1'-0"

No.	DATE	DESCRIPTION	DESIGNER	REVIEWER

SEAL

SEAL

STATE OF CONNECTICUT · KRISTEN E. SOLDWEDEL · No. 22072 · LICENSED PROFESSIONAL ENGINEER

SCALE:
HORZ.: AS NOTED
VERT.: AS NOTED
DATUM:
HORZ.: NAD 83
VERT.: NAVD 88
0
GRAPHIC SCALE

FUSS & O'NEILL
146 HARTFORD ROAD
MANCHESTER, CONNECTICUT 06040
860.646.2469
www.fando.com

CITY OF MERIDEN
HANOVER STREET BRIDGE
ABUTMENT 2
BRIDGE REPLACEMENT AND UTILITY IMPROVEMENTS
BUTLER STREET AND HANOVER STREET
MERIDEN CONNECTICUT

PROJ. No.: 20170932C11
DATE: FEBRUARY 27, 2024

SA-304

File Path: J:\DWG\P2017\0932\C11\Structural\Plan\20170932C11_08_HANOVER ABUT.dwg Layout: SA-304 Plotted: Wed, February 28, 2024 - 11:55 AM User: astripsky
Plotter: AUTOCAD PDF (GENERAL DOCUMENTATION).PC3 CTB File: FO.STB
MS VIEW:
LAYER STATE:

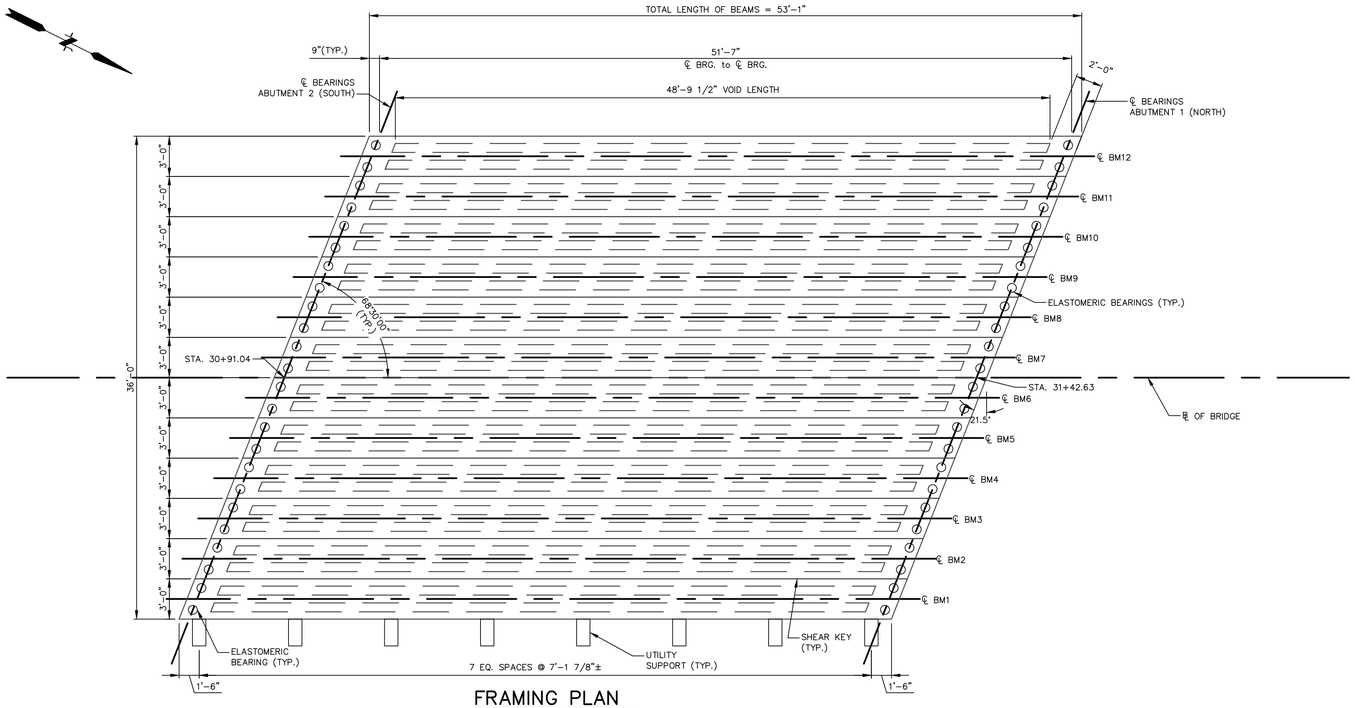

FRAMING PLAN

SCALE: 3/16" = 1'-0"

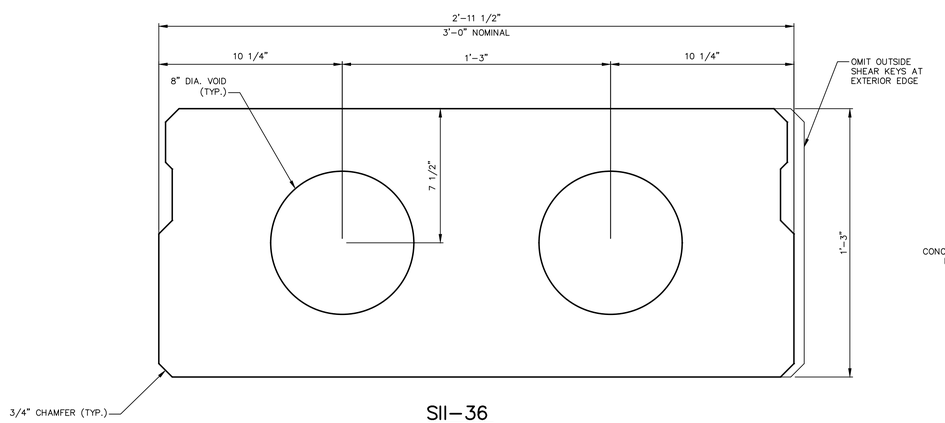

SII-36

SCALE: 3" = 1'-0"

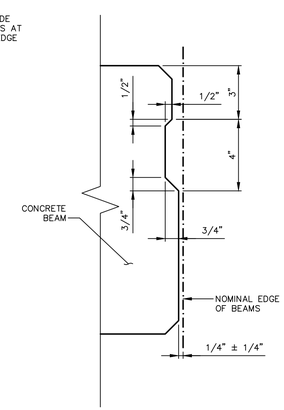

TYPICAL KEYWAY DETAIL

SCALE: 3" = 1'-0"

PRESTRESSED DECK UNIT NOTES:

1. PRESTRESSED DECK UNITS SHALL CONFORM TO THE FOLLOWING REQUIREMENTS:
   f'ci = 6 KSI
   f'c = 8 KSI
2. PRESTRESSED STRANDS SHALL CONFORM TO THE FOLLOWING REQUIREMENTS. 0.6" DIAMETER, UNLOCATED, 7 WIRE, LOW RELAXATION STRANDS CONFORMING TO THE REQUIREMENTS OF AASHTO M203, GRADE 270:
   ULTIMATE STRENGTH (f'S) = 270,000 PSI
   JACKING TENSION (fj) = 43,940 LBS. PER STRAND
3. PRESTRESSED STRANDS SHALL BE PLACED 2" MINIMUM ON CENTER AND SHALL HAVE A MINIMUM COVER OF 2".
4. ENDS OF THE DECK UNITS SHALL BE VERTICAL AFTER APPLICATION OF FULL DEAD LOAD.
5. THE DRILLING OF HOLES IN PRESTRESSED DECK UNITS, OR THE USE OF POWDER ACTUATED TOOLS ON PRESTRESSED DECK UNIT WILL NOT BE PERMITTED.
6. MILD REINFORCING STEEL SHALL BE GALVANIZED ASTM A615 GRADE 60.
7. THE CONTRACTOR SHALL MANUFACTURE AND CONSTRUCT DECK UNITS IN ACCORDANCE WITH SPECIAL PROVISIONS FOR "PRESTRESSED DECK UNITS".
8. ALL INSERTS OF HOLES CAST INTO THE DECK UNITS FOR THE PURPOSE OF HANDLING AND SETTING THE UNITS SHALL BE DEALD WITH GROUT TO A SMOOTH FINISH UPON COMPLETION OF THE WORK.
9. THE COST OF FURNISHING INSERTS SHALL BE INCLUDED UNDER ITEM #0514226 "PRESTRESSED DECK UNITS".
10. LIFTING HOOKS SHALL BE PLACED IN LINE WITH THE CENTER OF THE BEARINGS AND SHALL BE INSTALLED PER THE FABRICATOR'S STANDARD DETAILS. THE FABRICATORS IS FULLY RESPONSIBLE FOR THE DESIGN OF THE LIFTING DEVICES WHICH SHALL BE ADEQUATE FOR THE SAFETY OF FACTOR'S REQUIRED BY THE ERECTION PROCEDURE.

STRANDS SUMMARY

DECK UNIT TYPE	STRAND NUMBER	STRAND CG AT MIDSPAN	STRAND CG AT ENDS
SII-36	20	2.80 IN.	2.89 (2 STRANDS DEBONDED) 3.14 (4 STRANDS DEBONDED)

CAMBER TABLE

MEMBER NUMBER	AT TRANSFER	AT ERECTION	FINAL
	CAMBER DUE TO PRETENSIONING FORCE AT TRANSFER MINUS THE DEFLECTION DUE TO THE DEAD LOAD OF THE MEMBER	CAMBER (DUE TO PRETENSIONING FORCE AT TRANSFER MINUS THE DEFLECTION DUE TO THE DEAD LOAD OF THE MEMBER) APPROXIMATEL 30 DAYS AFTER TRANSFER.	CAMBER AFTER ALL DEAD LOADS ARE APPLIED TO THE STRUCTURE.
BM1 & BM12	2.144	2.499	1.143
BM2 to BM11	2.144	2.642	1.454

SHIPPING DATA FOR PRESTRESSED DECK UNITS MAXIMUM ESTIMATED VALUE

MEMBER	SHIPPING LENGTH	SHIPPING HEIGHT	SHIPPING WIDTH	SHIPPING WEIGHT
BM1 to BM12	54'-3"	1'-3"	3'-0"	24,220 LB.

No.	DATE	DESCRIPTION	DESIGNER	REVIEWER

SEAL

SEAL

STATE OF CONNECTICUT · KRISTIN E. SOLOMON · No. 22072 · LICENSED PROFESSIONAL ENGINEER

SCALE:
HORZ.: AS NOTED
VERT.: AS NOTED
DATUM:
HORZ.: NAD 83
VERT.: NAVD 88
0
GRAPHIC SCALE

FUSS & O'NEILL
146 HARTFORD ROAD
MANCHESTER, CONNECTICUT 06040
860.646.2469
www.fando.com

CITY OF MERIDEN
HANOVER STREET BRIDGE
FRAMING PLAN
BRIDGE REPLACEMENT AND UTILITY IMPROVEMENTS
BUTLER STREET AND HANOVER STREET
MERIDEN CONNECTICUT

PROJ. No.: 20170932C11
DATE: FEBRUARY 27, 2024

SA-305

File Path: J:\DWG\P\20170932\C11\Structural\Plan\20170932C11_09_HANOVER FRAMING & BEAM.dwg Layout: SA-305 Plotted: Wed, February 28, 2024 - 11:55 AM User: astrpsky
Plotter: AUTOCAD PDF (GENERAL DOCUMENTATION).PC3 CTB File: FO.STB
MS VIEW:
LAYER STATE:

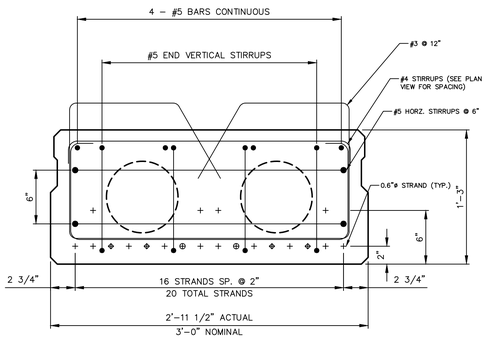

SECTION AT BEAM END

SCALE: 1 1/2" = 1'-0"

NOTE:
1. ⊕ DENOTES STRANDS DEBONDED 10'-0" FROM END
2. ⊕ DENOTES STRANDS DEBONDED 5'-0" FROM END

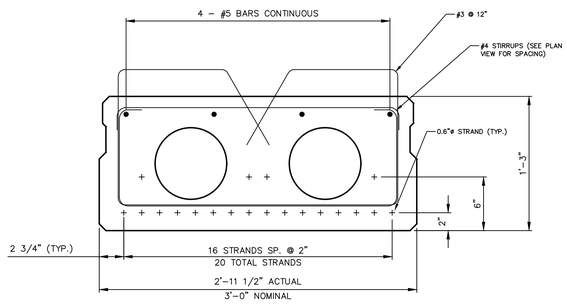

SECTION THRU MIDSPAN

SCALE: 1 1/2" = 1'-0"

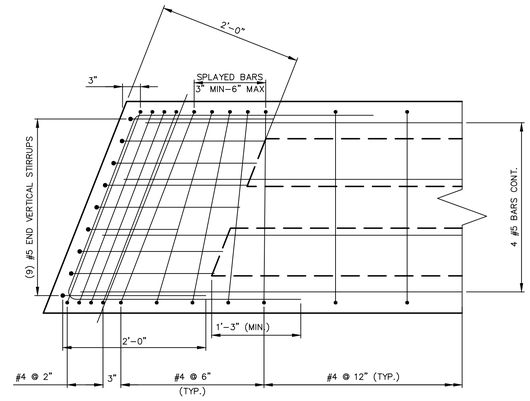

PLAN VIEW

1" = 1'-0"

No.	DATE	DESCRIPTION	DESIGNER	REVIEWER

SEAL

SEAL

STATE OF CONNECTICUT
KRISTEN E. SOLOWAY
No. 22072
LICENSED
PROFESSIONAL ENGINEER

SCALE:
HORZ.: AS NOTED
VERT.: AS NOTED
DATUM:
HORZ.: NAD 83
VERT.: NAVD 88
0
GRAPHIC SCALE

FUSS & O'NEILL
146 HARTFORD ROAD
MANCHESTER, CONNECTICUT 06040
860.646.2469
www.fando.com

CITY OF MERIDEN
HANOVER STREET BRIDGE
BEAM DETAILS
BRIDGE REPLACEMENT AND UTILITY IMPROVEMENTS
BUTLER STREET AND HANOVER STREET
MERIDEN CONNECTICUT

PROJ. No.: 20170932C11
DATE: FEBRUARY 27, 2024

SA-306

File Path: J:\DWG\P2017\0932\C11\Structural\Plan\20170932C11_09_HANOVER FRAMING & BEAM.dwg Layout: SA-306 Plotted: Wed, February 28, 2024 - 11:55 AM User: astripsky
MS VIEW: LAYER STATE: Plotter: AUTOCAD PDF (GENERAL DOCUMENTATION).PC3 CTB File: FO.STB

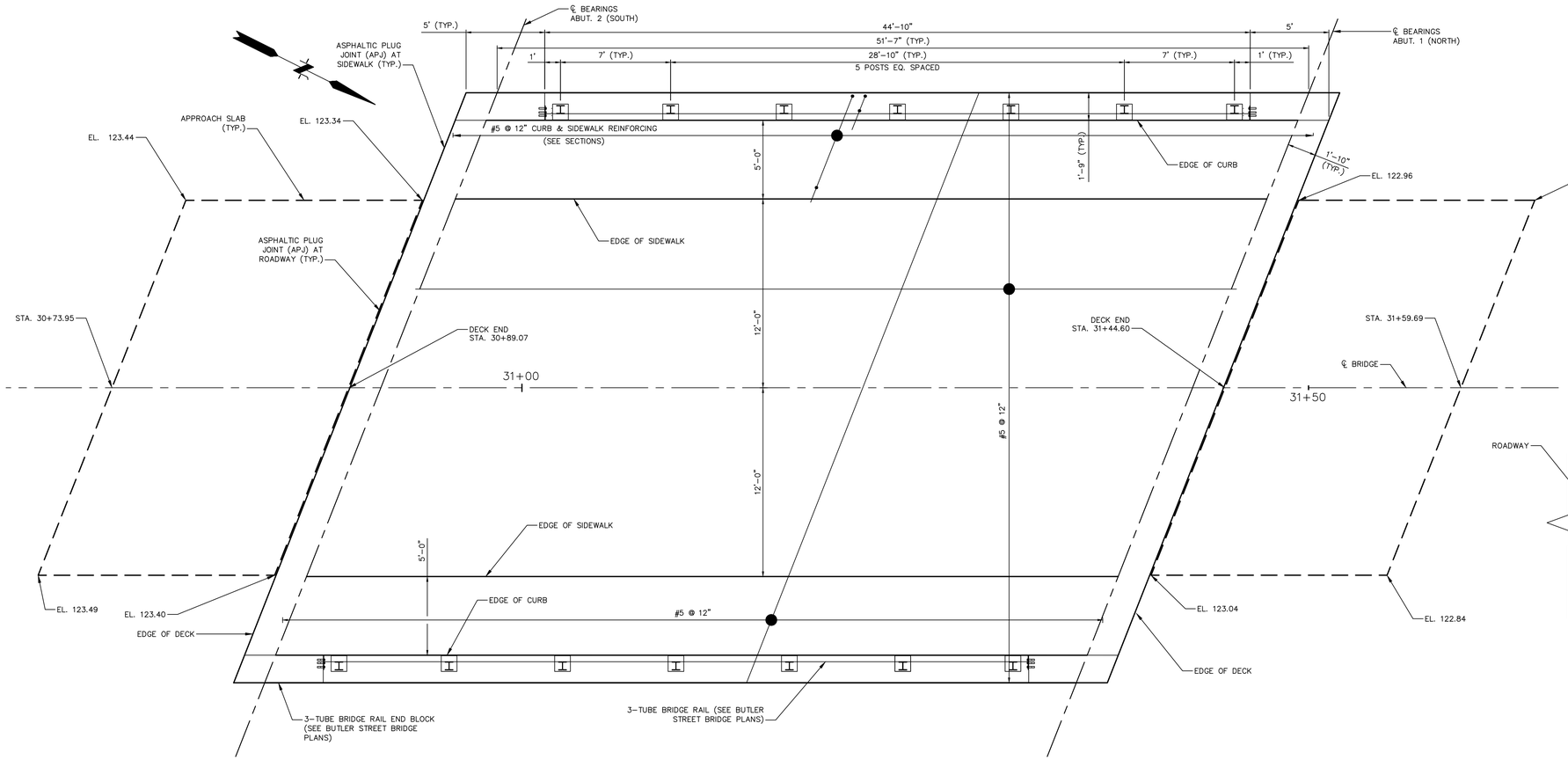

DECK PLAN
1/4" = 1'-0"

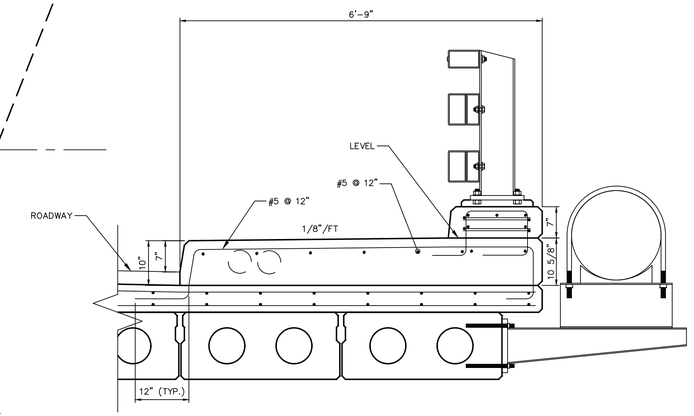

SIDEWALK DETAIL
3/4" = 1'-0"

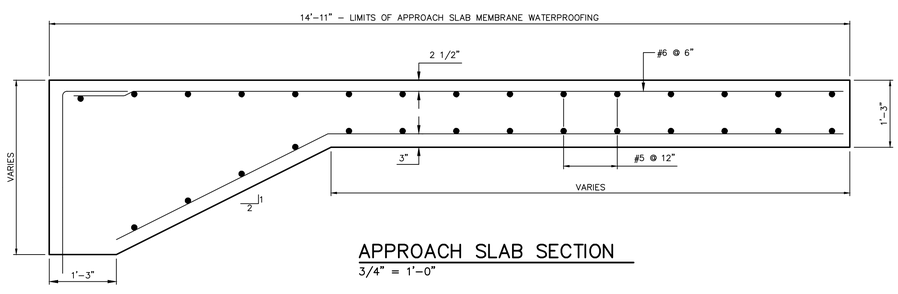

APPROACH SLAB SECTION
3/4" = 1'-0"

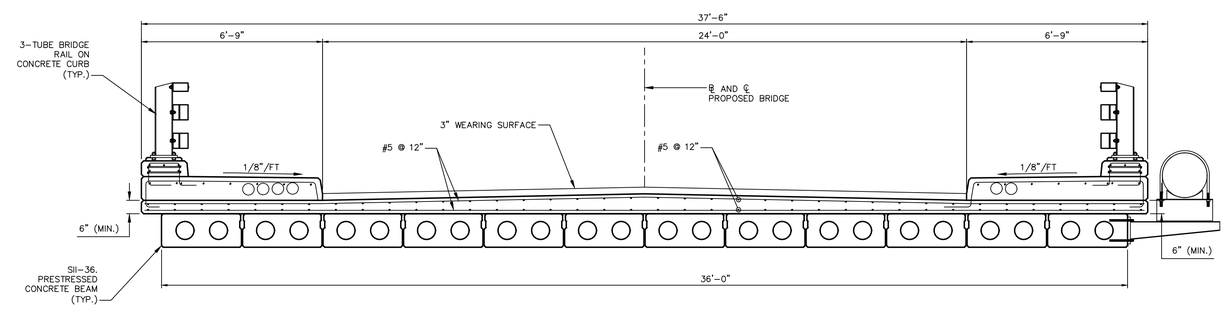

DECK SECTION
3/8" = 1'-0"

No.	DATE	DESCRIPTION	DESIGNER	REVIEWER

SEAL

SEAL

STATE OF CONNECTICUT KRISTEN E. SOLOWAY No. 22072 LICENSED PROFESSIONAL ENGINEER

SCALE:
HORZ.: AS NOTED
VERT.: AS NOTED
DATUM:
HORZ.: NAD 83
VERT.: NAVD 88
0
GRAPHIC SCALE

FUSS & O'NEILL
146 HARTFORD ROAD
MANCHESTER, CONNECTICUT 06040
860.646.2469
www.fando.com

CITY OF MERIDEN
HANOVER STREET BRIDGE
DECK PLAN & DETAILS
BRIDGE REPLACEMENT AND UTILITY IMPROVEMENTS
BUTLER STREET AND HANOVER STREET
MERIDEN CONNECTICUT

PROJ. No.: 20170932C11
DATE: FEBRUARY 27, 2024

SA-307

File Path: J:\DWG\P2017\0932\C11\Structural\Plan\20170932C11_10_HANOVER DECK & DETAILS.dwg Layout: SA-307 Plotted: Wed, February 28, 2024 - 11:56 AM User: astripsky
Plotter: AUTOCAD PDF (GENERAL DOCUMENTATION).PC3 CTB File: FO.STB
MS VIEW:
LAYER STATE:

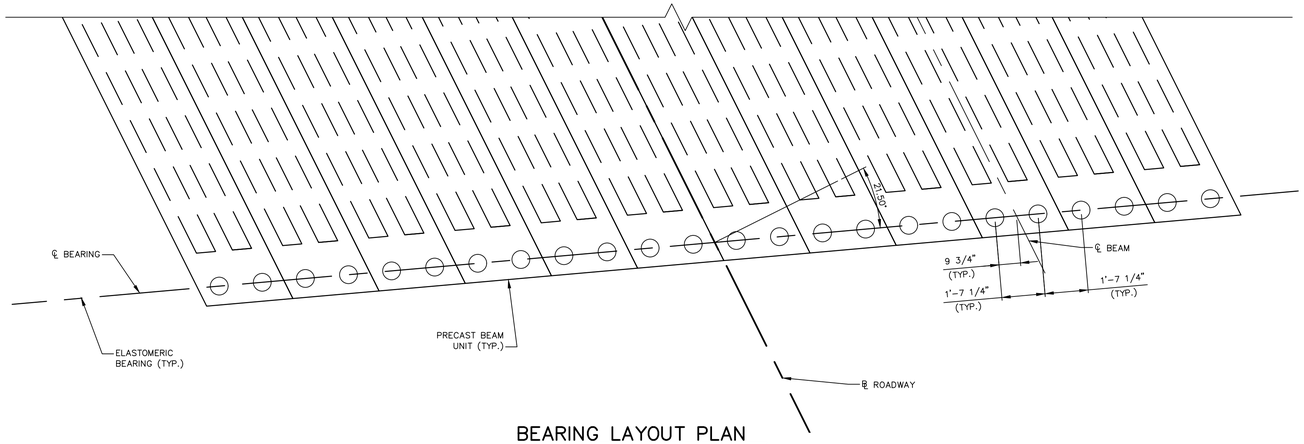

BEARING LAYOUT PLAN
3/8" = 1'-0"

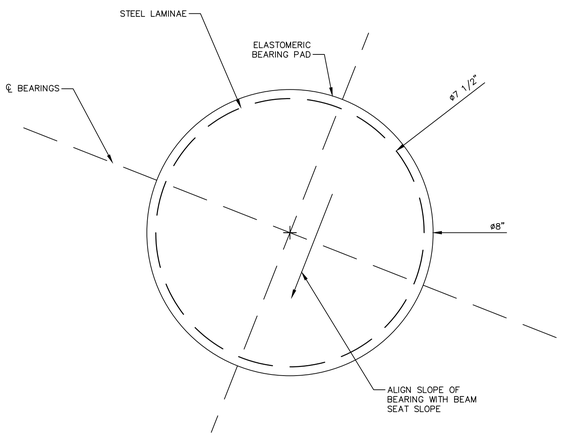

BEARING PLAN
6" = 1'-0"

FINISHED DECK ELEVATIONS					
℄ OF BEAM	0/4L	1/4L	2/4L	3/4L	4/4L
B1	123.40	123.32	123.23	123.15	123.06
B2	123.40	123.32	123.23	123.15	123.06
B3	123.42	123.34	123.25	123.17	123.08
B4	123.47	123.39	123.30	123.22	123.13
B5	123.52	123.44	123.35	123.27	123.18
B6	123.57	123.49	123.40	123.32	123.23
B7	123.57	123.49	123.40	123.32	123.23
B8	123.50	123.42	123.33	123.25	123.16
B9	123.43	123.35	123.26	123.18	123.09
B10	123.36	123.28	123.19	123.11	123.02
B11	123.32	123.24	123.15	123.07	122.98
B12	123.32	123.24	123.15	122.07	122.96

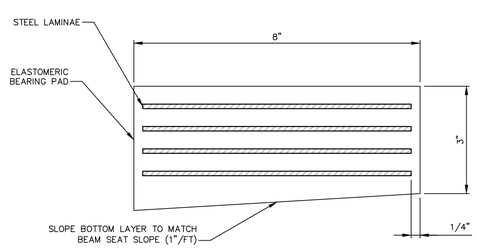

BEARING ELEVATION
6" = 1'-0"

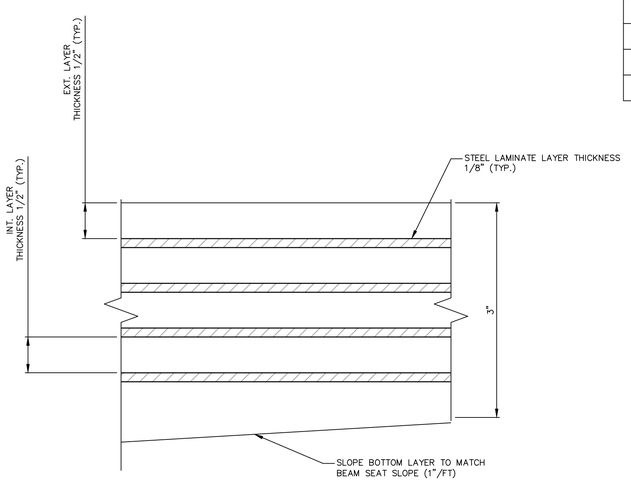

BEARING SECTION
1'-0" = 1'-0"

No.	DATE	DESCRIPTION	DESIGNER	REVIEWER
####	####	####	####	####
####	####	####	####	####
####	####	####	####	####
####	####	####	####	####
####	####	####	####	####
####	####	####	####	####
####	####	####	####	####
####	####	####	####	####
####	####	####	####	####

SEAL

SEAL

STATE OF CONNECTICUT REGISTERED PROFESSIONAL ENGINEER No. 22072 LICENSED

SCALE:
HORZ.: AS NOTED
VERT.:
DATUM:
HORZ.: -
VERT.: -

FUSS & O'NEILL
146 HARTFORD ROAD
MANCHESTER, CONNECTICUT 06040
860.646.2469
www.fando.com

CITY OF MERIDEN

ELASTOMERIC BEARINGS

BRIDGE REPLACEMENT AND UTILITY IMPROVEMENTS
BUTLER STREET AND HANOVER STREET
MERIDEN CONNECTICUT

PROJ. No.: 20170932.C11
DATE: FEBRUARY 27, 2024

SA-308

File: J:\DWG\P2017\0932\C11\Structural\Plan\20170932C11_10_HANOVER BEARING & UTIL SUPORT.dwg Layout: SA-308 Plotted: 2024-02-28 11:56 AM Saved: 2024-02-26 8:37 AM User: JTatar
PC3: AUTOCAD PDF (GENERAL DOCUMENTATION).PC3 STB/CTB: FO.STB
LAYER STATE:
MS VIEW:

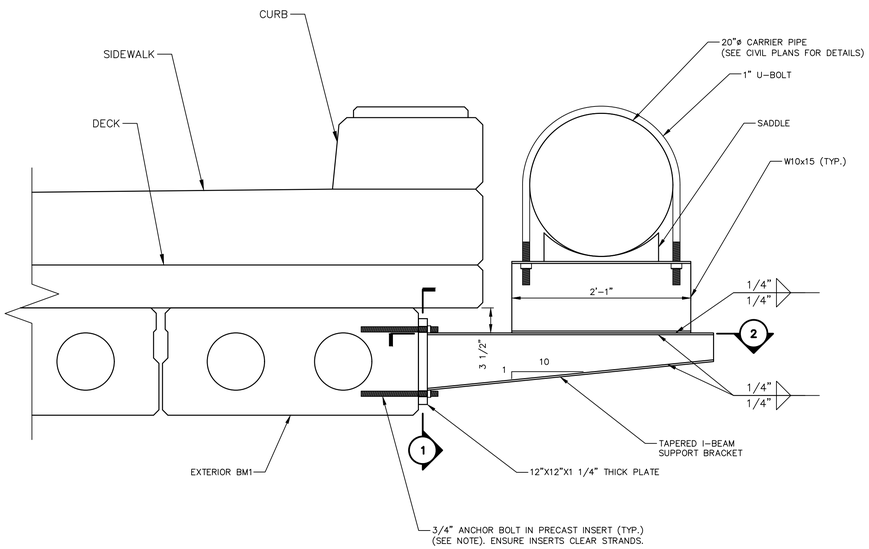

NOTE: INSERTS SHALL BE ADEQUATE FOR RESISTING A MAX TENSION LOAD OF 5 KIPS (FACTORED) OR 3.5 KIPS WORKING LOAD.

ELEVATION VIEW
1 1/2" = 1'-0"

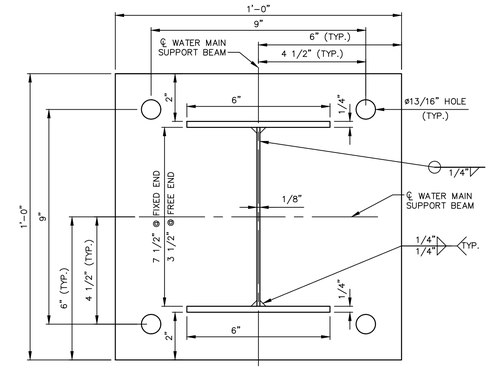

1 SECTION VIEW
4" = 1'-0"

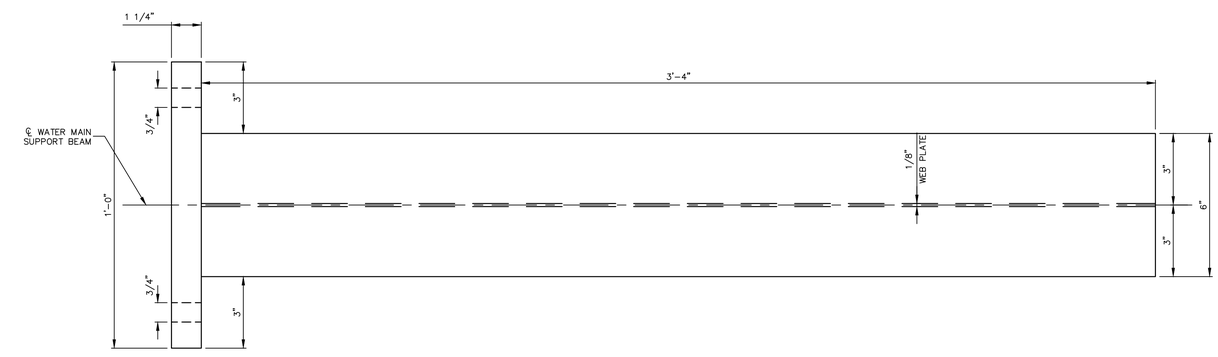

2 PLAN VIEW
4" = 1'-0"

NOTES:

1. ALL STEEL SHALL BE FABRICATED AND CONSTRUCTED IN ACCORDANCE WITH THE CTDOT STANDARD SPECIFICATIONS, FORM 818.
2. ALL STEEL SHALL BE ASTM A572 GRADE 50, GALVANIZED IN ACCORDANCE WITH ASTM A123.

No.	DATE	DESCRIPTION	DESIGNER	REVIEWER
####	####	####	####	####
####	####	####	####	####
####	####	####	####	####
####	####	####	####	####
####	####	####	####	####
####	####	####	####	####
####	####	####	####	####
####	####	####	####	####
####	####	####	####	####

SEAL

SEAL

STATE OF CONNECTICUT REGISTERED PROFESSIONAL ENGINEER No. 22072 LICENSED

SCALE:
HORZ.: AS NOTED
VERT.:
DATUM:
HORZ.: -
VERT.: -

FUSS & O'NEILL
146 HARTFORD ROAD
MANCHESTER, CONNECTICUT 06040
860.646.2469
www.fando.com

CITY OF MERIDEN

UTILITY SUPPORT BEAM DETAILS

BRIDGE REPLACEMENT AND UTILITY IMPROVEMENTS
BUTLER STREET AND HANOVER STREET

MERIDEN CONNECTICUT

PROJ. No.: 20170932.C11
DATE: FEBRUARY 27, 2024

SA-309

File: J:\DWG\P2017\0932\C11\Structural\Plan\20170932C11_10_HANOVER BEARING & UTIL SUPORT.dwg Layout: SA-309 Plotted: 2024-02-28 11:56 AM Saved: 2024-02-26 8:37 AM User: JTatar
MS VIEW:
LAYER STATE:
PC3: AUTOCAD PDF (GENERAL DOCUMENTATION).PC3 STB/CTB: FO.STB

BITUMINOUS CONCRETE PLACEMENT AT ASPHALTIC PLUG JOINTS (APJ)

1. THE REQUIREMENTS OF SPECIAL PROVISION SECTION 4.06 SHALL BE MET EXCEPT IN LIEU OF DENSITY TESTING, THE METHODS DESCRIBED BELOW SHALL BE FOLLOWED TO ASSURE PROPER COMPACTION.

2. TOP LIFT MUST BE UNIFORM THICKNESS; INTERMEDIATE LIFTS CAN BE PLACED AT 1¼" TO 2½"COMPACTED.

3. REQUIREMENTS FOR PROPER COMPACTION:

   a. MINIMUM 265° F DELIVERY TEMPERATURE OF MATERIAL. PLACE AND SPREAD MATERIAL BEFORE IT COOLS TO 260° F. MATERIAL BELOW TEMPERATURE REQUIREMENT WILL BE REJECTED.

   b. COMPACT NON-SURFACE LIFTS WITH VIBRATORY PLATE COMPACTOR MEETING THE FOLLOWING REQUIREMENTS:

      i. DESIGNED TO COMPACT ASPHALT
      ii. EQUIPPED WITH A WATER TANK
      iii. CENTRIFUGAL FORCE 3200 LBS TO 6000 LBS
      iv. WEIGHS MINIMUM 160 LBS (WITHOUT WATER)
      v. MINIMUM 4400 VIBRATIONS PER MINUTE

   c. COMPACT TOP LIFT WITH 3 1/2 TO 4 1/2 TON DOUBLE DRUM ROLLER, DESIGNED TO COMPACT BITUMINOUS CONCRETE.

   d. PROVIDE NUMBER OF PASSES BASED ON LIFT THICKNESS AS FOLLOWS:

LIFT THICKNESS (INCHES)	NUMBER OF PASSES
1 1/4 TO 1 1/2	8
1 1 /2 TO 2	10
2 TO 2 1/2	12

e. ADDITIONAL COMPACTING EQUIPMENT MAY BE REQUIRED TO COMPLETE LIFT COMPACTION BEFORE MATERIAL COOLS TO 180° F.

f. AT CORNERS OR OTHER AREAS INACCESSIBLE TO PLATE TAMPER, HAND TAMP 20 TIMES MINIMUM BEFORE MATERIAL COOLS TO 180° F.

4. ALTERNATE EQUIPMENT MAY BE REQUESTED AS A SUPPLEMENT TO CONTRACTOR'S QC PLAN. THE EQUIPMENT AND PROCEDURES MUST BE APPROVED BY THE ENGINEER PRIOR TO USE.

5. IF THESE METHODS ARE NOT PERFORMED TO THE SATISFACTION OF THE ENGINEER, DENSITY VERIFICATION MAY BE REQUIRED WHEREIN THE CONTRACTOR SHALL PROVIDE DENSITY TESTING WITH A QC NUCLEAR DENSITY GAUGE OR COLLECT CORE SAMPLES AS SPECIFIED IN SECTION 4.06.

ASPHALTIC PLUG EXPANSION JOINT SYSTEM NOTES

1. A BRIDGING PLATE SHALL BE USED TO SPAN THE GAP BETWEEN TWO DECK ENDS OR THE JOINT BETWEEN A DECK END AND A CONCRETE APPROACH SLAB.

2. DISCONTINUE THE INSTALLATION OF THE BRIDGING PLATE WHERE THE APPROACH SLAB IS DISCONTINUED (TYPICALLY IN THE ROADWAY SHOULDERS). SEE "ASPHALTIC PLUG EXPANSION JOINT SYSTEM" SPECIAL PROVISION.

3. NEW STEEL BRIDGING PLATES SHALL BE A MINIMUM OF ¼" THICK BY 8" WIDE. FOR JOINT OPENINGS WHICH EXCEED 3", A ⅜" THICK BY 12" WIDE PLATE WILL BE REQUIRED

4. NO BRIDGING PLATE SHALL BE USED AT THE FOLLOWING LOCATIONS:
   A. JOINT BETWEEN A DECK END AND A CONCRETE APPROACH PAVEMENT
   B. WHERE A BRIDGE DECK END MEETS A BITUMINOUS APPROACH PAVEMENT

5. THE REMOVAL OF ALL EXISTING JOINT SYSTEMS, BITUMINOUS CONCRETE OVERLAY, MEMBRANE WATERPROOFING AND BOND BREAKER WITHIN THE LIMITS SHOWN TO BE INCLUDED FOR PAYMENT UNDER THE ITEM "REMOVAL OF EXISTING WEARING SURFACE".

6. TEMPORARY CLOSED CELL BACKER ROD DIAMETER SHALL BE DETERMINED AFTER MEASURING THE JOINT OPENING, THE ROD SHALL BE 25% LARGER THAN THE JOINT OPENING.

7. INSTALLATION OF MEMBRANE WITHIN THE LIMITS SHOWN TO BE PAID UNDER THE ITEM, "MEMBRANE WATERPROOFING (XXXXXXXXXXXXXXX)".

8. THE FURNISHING AND PLACING OF HMA SX.XXX TO BE INCLUDED FOR PAYMENT UNDER THE ITEM "HMA SX.XXX".

9. SAW-CUTTING AND REMOVAL OF PAVEMENT FOR JOINT INSTALLATION TO BE INCLUDED FOR PAYMENT UNDER THE ITEM "ASPHALTIC PLUG EXPANSION JOINT SYSTEM".

10. INSTALLATION OF FOAM SUPPORTED SILICONE GLAND TO BE PAID UNDER THE ITEM "PREFORMED JOINT SEAL".

11. ASPHALTIC PLUG EXPANSION JOINT SYSTEMS MAY BE INSTALLED ONLY WITHIN THE TEMPERATURE RANGE SPECIFIED IN THE SPECIAL PROVISION "ASPHALTIC PLUG EXPANSION JOINT SYSTEM". REFERENCE THE RANGE OF THERMAL MOVEMENT FOR THE SELECTED JOINT PRODUCT IN THE TABLE FOR "INSTALLATION RESTRICTIONS" IN THE SPECIAL PROVISION.

12. EXPLORATION OF PAVEMENT THICKNESS AND JOINT LOCATION TO BE INCLUDED IN THE GENERAL COST OF THE ITEM "REMOVAL OF EXISTING WEARING SURFACE".

13. CONTRACTOR SHALL NOTIFY THE DEPARTMENT IF THE EXISTING PAVEMENT IS DETERMINED TO BE LESS THAN 2" OR GREATER THAN 6" WITHIN THE BRIDGE LIMITS.

14. FOAM SUPPORTED SILICONE GLAND SHALL BE INCLUDED FOR PAYMENT UNDER ITEM "PREFORMED JOINT SEAL."

JOINT WORK FOR BRIDGES

1. ALL WORK TO REMOVE BITUMINOUS CONCRETE OVERLAY, MEMBRANE WATERPROOFING, EXISTING JOINT COMPONENTS AND SEALING ELEMENTS, SHALL BE INCLUDED IN THE COST OF "REMOVAL OF EXISTING WEARING SURFACE".

2. WHERE EXISTING BRIDGE DECK JOINTS ARE CONCEALED BENEATH BITUMINOUS CONCRETE OVERLAY THE CONTRACTOR SHALL VERIFY THE BRIDGE DECK JOINT LOCATION AND SUBMIT THE LIMITS OF SAW-CUTTING FOR THE ENGINEERS APPROVAL.

3. THE FURNISHING AND PLACING OF TEMPORARY PAVEMENT IN THE JOINT CUT-OUT SHALL CONFORM TO "BITUMINOUS CONCRETE PLACEMENT PLACEMENT AT ASPHALTIC PLUG JOINTS (APJ)" AND SHALL BE INCLUDED FOR PAYMENT UNDER THE ITEM "HMA S0.375."

4. MEMBRANE WATERPROOFING SHALL BE "MEMBRANE WATERPROOFING (XXXXXXXX XXXX)" AND SHALL BE PLACED PRIOR TO PLACEMENT OF PAVEMENT OVERLAY.

5. ROUGH OR DAMAGED CONCRETE DECK SURFACES SHALL BE REPAIRED WITH A CONCRETE LEVELING MATERIAL INCLUDED FOR PAYMENT UNDER THE ITEM "ASPHALTIC PLUG EXPANSION JOINT SYSTEM".

6. THE DEPTH OF PROPOSED ASPHALTIC PLUG JOINT IS ESTIMATED TO BE 4" AVERAGE.

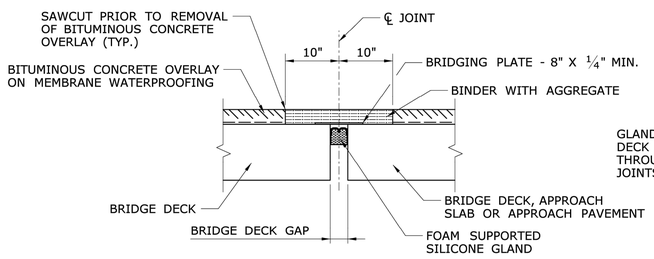

TYPICAL SECTION
ASPHALTIC PLUG EXPANSION JOINT SYSTEM
NOT TO SCALE

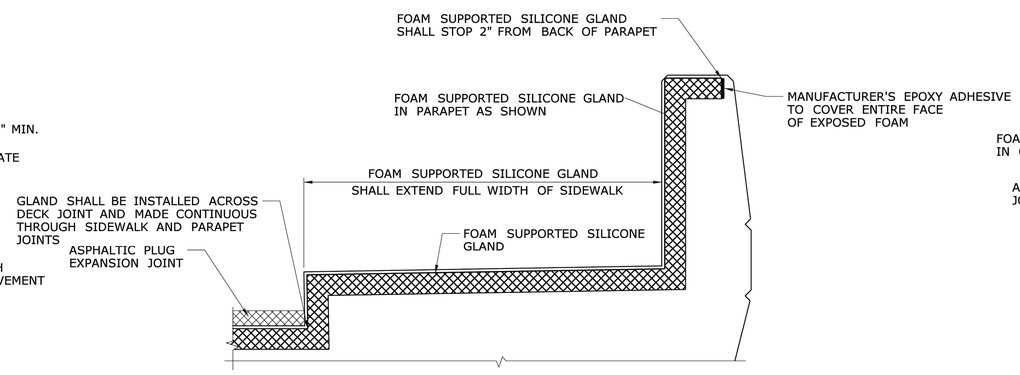

SCHEMATIC OF ASPHALTIC PLUG JOINT
AT PARAPET WITH SIDEWALK
NOT TO SCALE

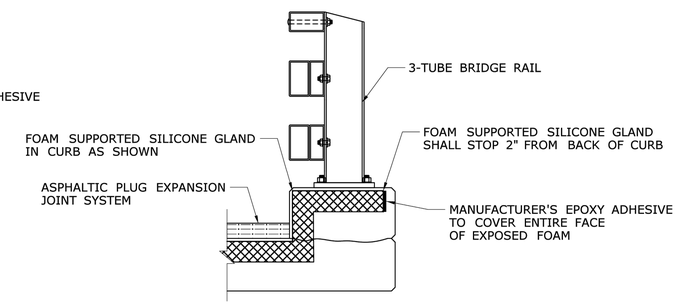

SCHEMATIC OF ASPHALTIC PLUG JOINT
AT CURB WITH 3-TUBE BRIDGE RAIL
NOT TO SCALE

No.	DATE	DESCRIPTION	DESIGNER	REVIEWER
####	####	####	####	####
####	####	####	####	####
####	####	####	####	####
####	####	####	####	####
####	####	####	####	####
####	####	####	####	####
####	####	####	####	####
####	####	####	####	####
####	####	####	####	####
####	####	####	####	####

SEAL

SEAL

STATE OF CONNECTICUT · KRISTEN E. SOUCHAK · No. 22073 · LICENSED PROFESSIONAL ENGINEER

SCALE:
HORZ.: AS NOTED
VERT.:
DATUM:
HORZ.: -
VERT.: -

FUSS & O'NEILL
146 HARTFORD ROAD
MANCHESTER, CONNECTICUT 06040
860.646.2469
www.fando.com

CITY OF MERIDEN

ASPHALTIC PLUG JOINT DETAILS I

BRIDGE REPLACEMENT AND UTILITY IMPROVEMENTS
BUTLER STREET AND HANOVER STREET
MERIDEN CONNECTICUT

PROJ. No.: 20170932.C11
DATE: FEBRUARY 27, 2024

SA-310

File: J:\DWG\P\20170932\C11\Structural\Plan\20170932C11_10_HANOVER BEARING & UTIL SUPORT.dwg Layout: SA-310 Plotted: 2024-02-28 11:56 AM Saved: 2024-02-28 8:37 AM User: JTatar
PC3: AUTOCAD PDF (GENERAL DOCUMENTATION).PC3 STB/CTB: FO.STB
MS VIEW:
LAYER STATE:

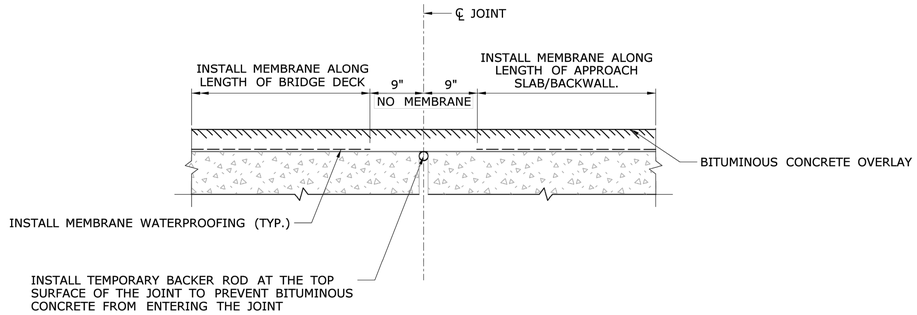

PLACEMENT OF PAVEMENT ALONG THE BRIDGE

N.T.S.

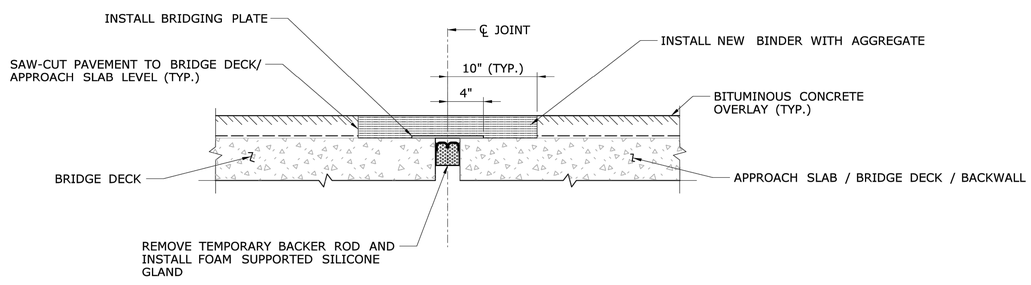

INSTALL ASPHALTIC PLUG EXPANSION JOINT

N.T.S.

SUGGESTED SEQUENCE OF WORK

STEP 1: CONTRACTOR SHALL PERFORM AN EXPLORATION AT THE GUTTERLINE (AT THE FOUR CORNERS OF THE BRIDGE) AND THE CROWN (AT THE BEGINNING AND END OF THE BRIDGE). A MINIMUM OF SIX REPRESENTATIVE DEPTH MEASUREMENTS SHALL BE TAKEN PER BRIDGE AT THESE LOCATIONS TO DETERMINE THE DEPTH OF PAVEMENT AND THE LOCATION OF THE DECK ENDS (CENTERLINE OF PROPOSED JOINT. ADDITIONAL MEASUREMENTS SHALL BE TAKEN IF NEEDED IN ACCORDANCE WITH SPECIAL PROVISION FOR "REMOVAL OF EXISTING WEARING SURFACE." CONTRACTOR SHALL ALSO MEASURE THE DECK JOINT GAP OPENING FOR SIZING OF THE FOAM SUPPORTED SILICONE GLAND.

STEP 2: REMOVE EXISTING PAVEMENT MATERIAL AND JOINT MATERIAL TO BRIDGE DECK LEVEL ALONG ENTIRE LENGTH OF BRIDGE. REMOVE BRIDGING PLATES PRIOR TO MILLING THE BRIDGE DECK.

STEP 3: INSTALL TEMPORARY BACKER ROD FLUSH WITH THE BRIDGE DECK AND APPROACH SLAB OR BACKWALL.

STEP 4: INSTALL MEMBRANE WATERPROOFING TO THE TOP OF DECK AND APPROACH SLAB WITHIN THE LIMITS SHOWN.

STEP 5: PLACE BITUMINOUS CONCRETE OVERLAY AS INDICATED ON THE PLANS.

STEP 6: SAW-CUT PAVEMENT FULL DEPTH AT 10" EACH SIDE OF CENTERLINE OF JOINT, AND REMOVE ALL PAVEMENT MATERIAL BETWEEN SAW-CUTS. TO BE PAID FOR UNDER THE ITEM "ASPHALTIC PLUG EXPANSION JOINT SYSTEM".

STEP 7: INSTALL PROPOSED ASPHALTIC PLUG EXPANSION JOINT SYSTEM WITH FOAM SUPPORTED SILICONE GLAND AND BRIDGING PLATE. LOCATING PINS SHALL NOT BE USED TO SECURE THE BRIDGING PLATE.

STEP 8: INSTALL CRACK SEAL AT CURB LINE ALONG THE LENGTH OF THE BRIDGE, BOTH SIDES. CRACK SEALING SHALL BE INCLUDED FOR PAYMENT UNDER ITEM "JOINT AND CRACK SEALING OF BITUMINOUS CONCRETE PAVEMENT."

No.	DATE	DESCRIPTION	DESIGNER	REVIEWER
####	####	####	####	####
####	####	####	####	####
####	####	####	####	####
####	####	####	####	####
####	####	####	####	####
####	####	####	####	####
####	####	####	####	####
####	####	####	####	####
####	####	####	####	####

SEAL

SEAL

STATE OF CONNECTICUT BRIDGE SOLUTIONS LICENSED PROFESSIONAL ENGINEER No. 22072

SCALE:
HORZ.: AS NOTED
VERT.:
DATUM:
HORZ.: -
VERT.: -

FUSS & O'NEILL
146 HARTFORD ROAD
MANCHESTER, CONNECTICUT 06040
860.646.2469
www.fando.com

CITY OF MERIDEN

ASPHALTIC PLUG JOINT DETAILS II

BRIDGE REPLACEMENT AND UTILITY IMPROVEMENTS
BUTLER STREET AND HANOVER STREET
MERIDEN CONNECTICUT

PROJ. No.: 20170932.C11
DATE: FEBRUARY 27, 2024

SA-311

File: J:\DWG\P2017\0932\C11\Structural\Plan\20170932C11_10_HANOVER BEARING & UTIL SUPORT.dwg Layout: SA-311 Plotted: 2024-02-28 11:56 AM Saved: 2024-02-26 8:37 AM User: JTatar
MS VIEW:
LAYER STATE:
PC3: AUTOCAD PDF (GENERAL DOCUMENTATION).PC3 STB/CTB: FO.STB

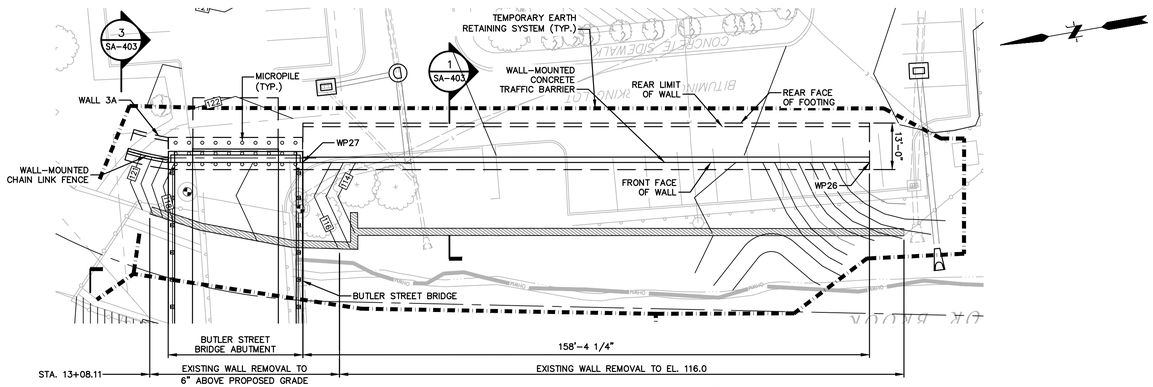

WALL 1 PLAN

SCALE: 1" = 20'-0"

LEGEND:
EXISTING WALL REMOVAL

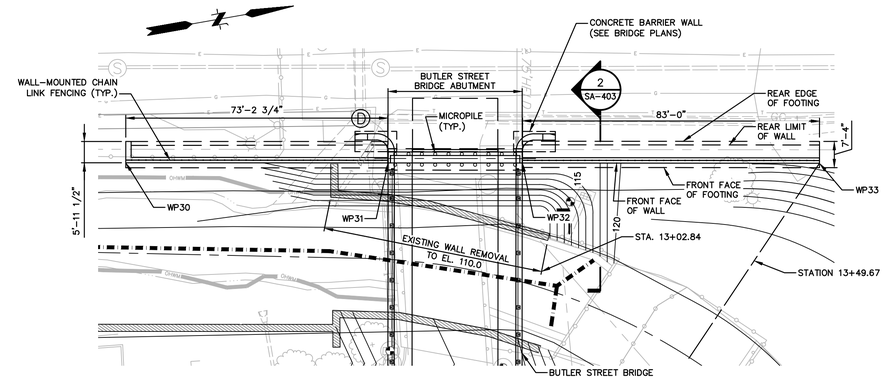

WALL 2 PLAN

SCALE: 1" = 20'-0"

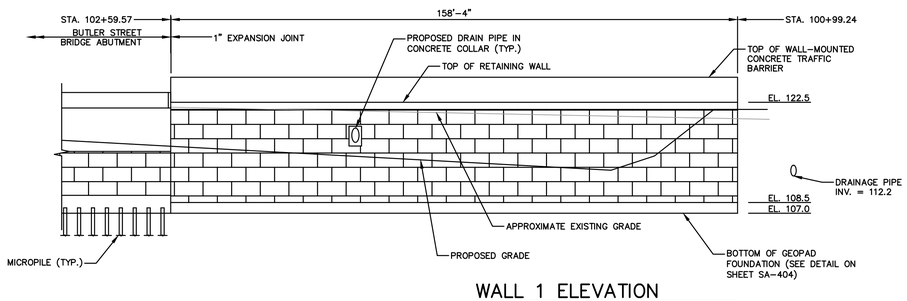

WALL 1 ELEVATION

SCALE: 1" = 20'-0" (H)
1" = 10'-0" (V)

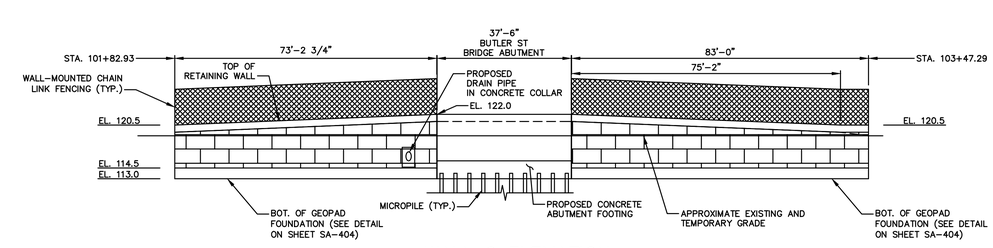

WALL 2 ELEVATION

SCALE: 1" = 20'-0" (H)
1" = 10'-0" (V)

WALL 1 WORKING POINTS – OUTSIDE FACE OF WALL				
WP #	NORTHING	EASTING	STATION	OFFSET
26	755879.463	984699.726	100+99.24	42.19
27	756035.415	984727.148	102+59.57	38.48

WALL 2 WORKING POINTS – OUTSIDE FACE OF WALL				
WP #	NORTHING	EASTING	STATION	OFFSET
30	755974.703	984649.911	101+82.93	-25.24
31	756047.069	984661.169	102+55.31	-28.40
32	756083.901	984669.198	102+87.32	-32.23
33	756165.636	984683.635	103+47.29	-65.34

File Path: J:\DWG\P20170932\C11\Structural\Plan\20170932C11_01.5_WALL PLAN.dwg Layout: SA-401-PH1 Plotted: Wed, February 28, 2024 - 11:57 AM User: astrpsky
Plotter: AUTOCAD PDF (GENERAL DOCUMENTATION).PC3 CTB File: FO.STB
LAYER STATE:
MS VIEW:

No.	DATE	DESCRIPTION	DESIGNER	REVIEWER

SEAL

SEAL

STATE OF CONNECTICUT REGISTERED SOILS ENGINEER No. 22072 LICENSED PROFESSIONAL ENGINEER

SCALE:
HORZ.: 1" = 20'
VERT.: 1" = 10'
DATUM:
HORZ.: NAD 83
VERT.: NAVD 88
0
GRAPHIC SCALE

FUSS & O'NEILL
146 HARTFORD ROAD
MANCHESTER, CONNECTICUT 06040
860.646.2469
www.fando.com

CITY OF MERIDEN
CHANNEL RETAINING WALLS
WALL PLAN & ELEVATION
BRIDGE REPLACEMENT AND UTILITY IMPROVEMENTS
BUTLER STREET AND HANOVER STREET
MERIDEN CONNECTICUT

PROJ. No.: 20170932.C11
DATE: FEBRUARY 27, 2024

SA-401

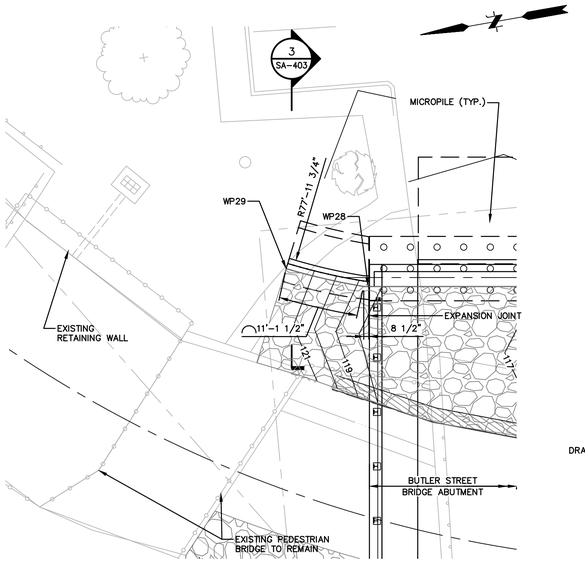

WALL 3A PLAN

SCALE: 1" = 10'-0"

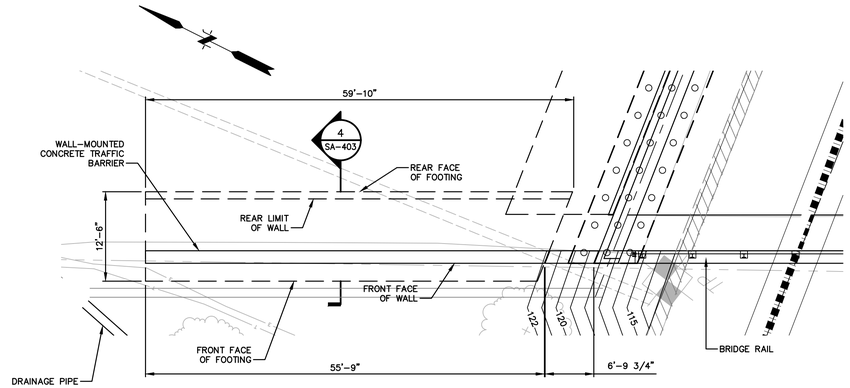

WALL 5A PLAN

SCALE: 1" = 10'-0"

NOTE:
SEE HANOVER STREET BRIDGE LAYOUT DRAWING FOR WALL 5A WORKING POINTS, BASED OFF HANOVER STREET BASELINE.

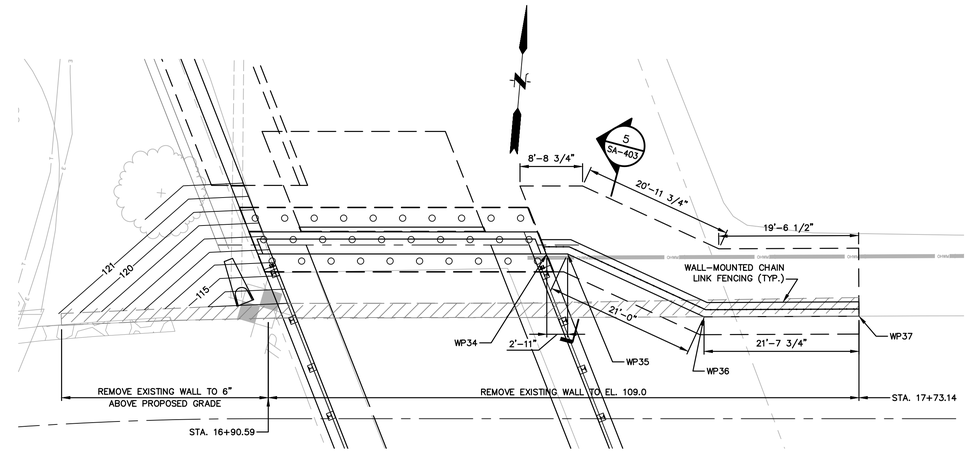

WALL 5B PLAN

SCALE: 1" = 10'-0"

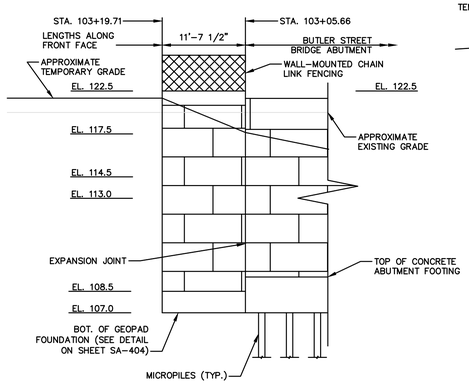

WALL 3A ELEVATION

SCALE: 1" = 10'-0" (H)
1" = 5'-0" (V)

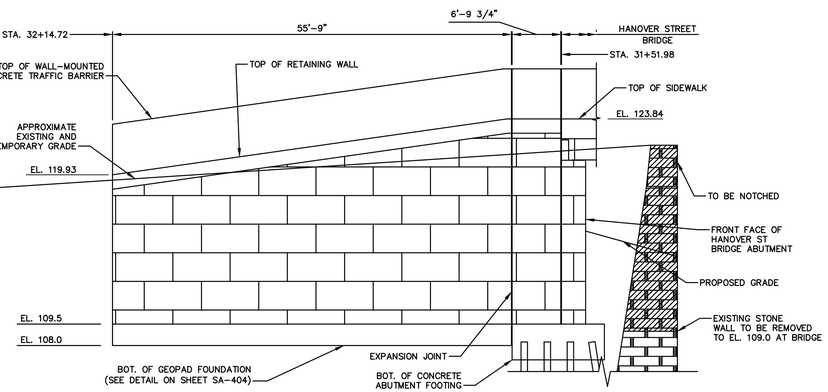

WALL 5A ELEVATION

1" = 10' (H)
1" = 5' (V)

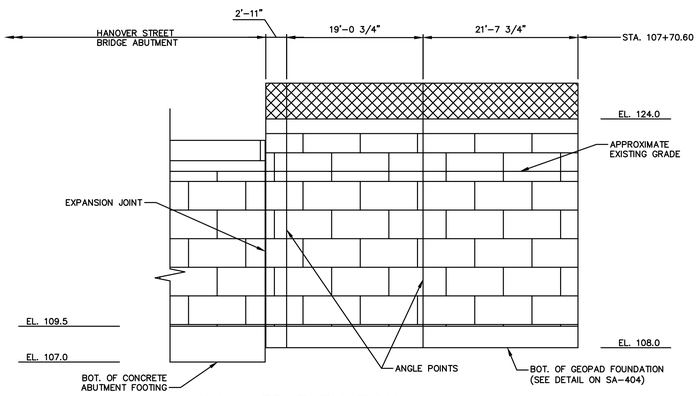

WALL 5B ELEVATION

1" = 10' (H)
1" = 5' (V)

WALL 3A AND 5A/B WORKING POINTS – OUTSIDE FACE OF WALL				
WP #	NORTHING	EASTING	STATION	OFFSET
28	756072.509	984733.700	103+05.66	30.71
29	756083.446	984738.164	103+19.71	28.77
34	756272.525	985080.088	107+26.98	−23.02
35	756272.780	985082.987	107+29.89	−23.02
36	756265.696	985102.748	107+48.95	−14.23
37	756267.695	985124.307	107+70.60	−14.32

No.	DATE	DESCRIPTION	DESIGNER	REVIEWER

SEAL

SEAL

STATE OF CONNECTICUT REGISTERED PROFESSIONAL ENGINEER No. 22072 LICENSED

SCALE:
HORZ.: 1" = 10'
VERT.: 1" = 5'
DATUM:
HORZ.: NAD 83
VERT.: NAVD 88
0
GRAPHIC SCALE

FUSS & O'NEILL
146 HARTFORD ROAD
MANCHESTER, CONNECTICUT 06040
860.646.2469
www.fando.com

CITY OF MERIDEN

CHANNEL RETAINING WALLS
WALL PLAN & ELEVATION

BRIDGE REPLACEMENT AND UTILITY IMPROVEMENTS
BUTLER STREET AND HANOVER STREET

MERIDEN CONNECTICUT

PROJ. No.: 20170932.C11
DATE: FEBRUARY 27, 2024

SA-402

File Path: J:\DWG\P20170932\C11\Structural\Plan\20170932C11_01.5_WALL PLAN.dwg Layout: SA-402-PH1 Plotted: Wed, February 28, 2024 - 11:58 AM User: astripsky
Plotter: AUTOCAD PDF (GENERAL DOCUMENTATION).PC3 CTB File: FO.STB
MS VIEW:
LAYER STATE:

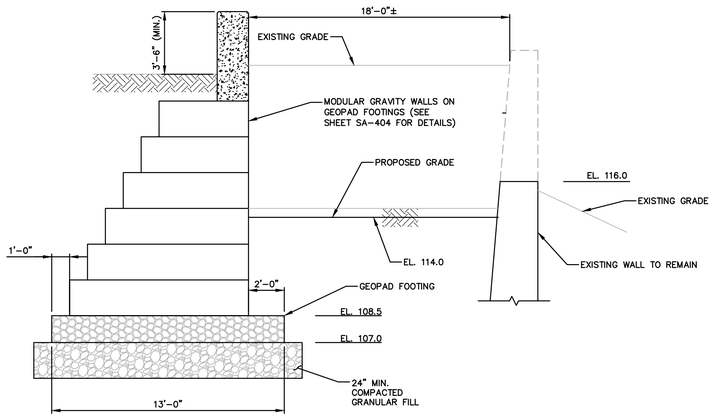

SECTION 1 – WALL 1
1/4" = 1'-0"

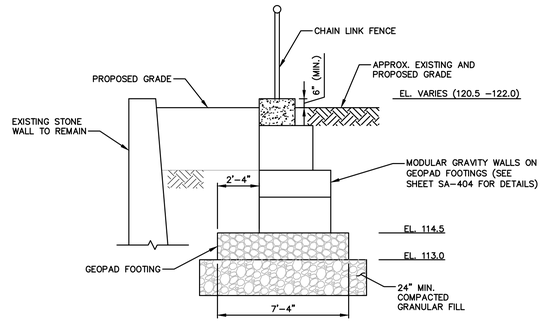

SECTION 2 – WALL 2
1/4" = 1'-0"

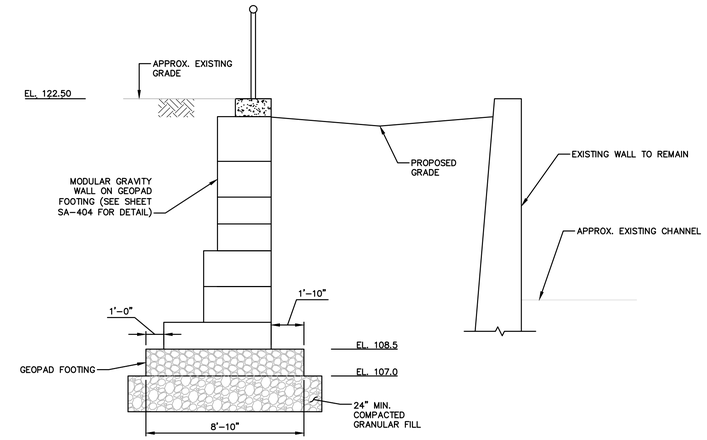

SECTION 3 – WALL 3A
1/4" = 1'-0"

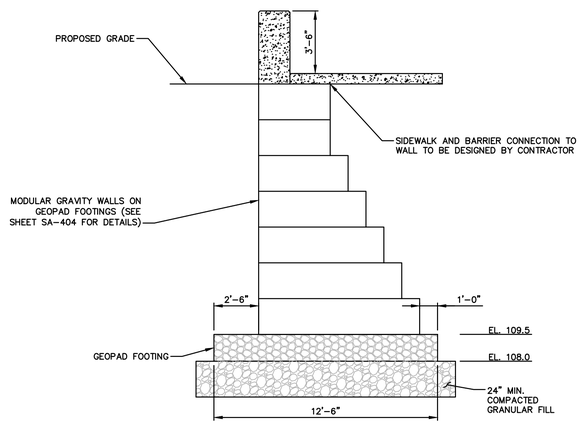

SECTION 4 – WALL 5A
1/4" = 1'-0"

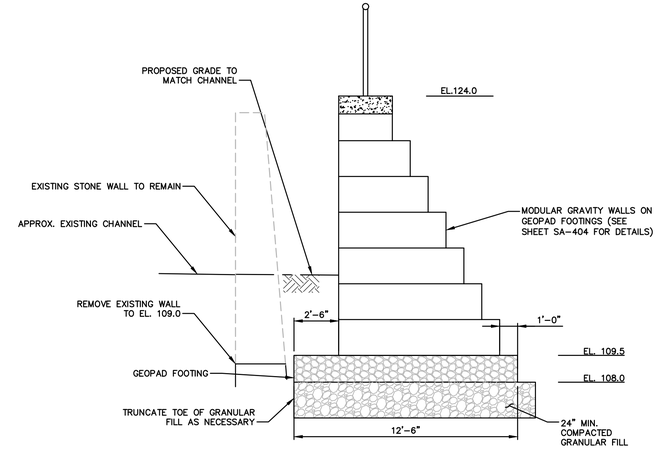

SECTION 5 – WALL 5B
1/4" = 1'-0"

File Path: J:\DWG\P20\20170932\C11\Structural\Plan\20170932C11_01.5_WALL PLAN.dwg Layout: SA-403-PH1 Plotted: Wed, February 28, 2024 - 11:59 AM User: astripsky
Plotter: AUTOCAD PDF (GENERAL DOCUMENTATION).PC3 CTB File: FO.STB
MS VIEW: LAYER STATE:

No.	DATE	DESCRIPTION	DESIGNER	REVIEWER

SEAL

SEAL

STATE OF CONNECTICUT REGISTERED PROFESSIONAL ENGINEER No. 22072 LICENSED

SCALE:
HORZ.: AS NOTED
VERT.: AS NOTED
DATUM:
HORZ.: NAD 83
VERT.: NAVD 88
0
GRAPHIC SCALE

FUSS & O'NEILL
146 HARTFORD ROAD
MANCHESTER, CONNECTICUT 06040
860.646.2469
www.fando.com

CITY OF MERIDEN
CHANNEL RETAINING WALLS
WALL SECTIONS
BRIDGE REPLACEMENT AND UTILITY IMPROVEMENTS
BUTLER STREET AND HANOVER STREET
MERIDEN CONNECTICUT

PROJ. No.: 20170932.C11
DATE: FEBRUARY 27, 2024

SA-403

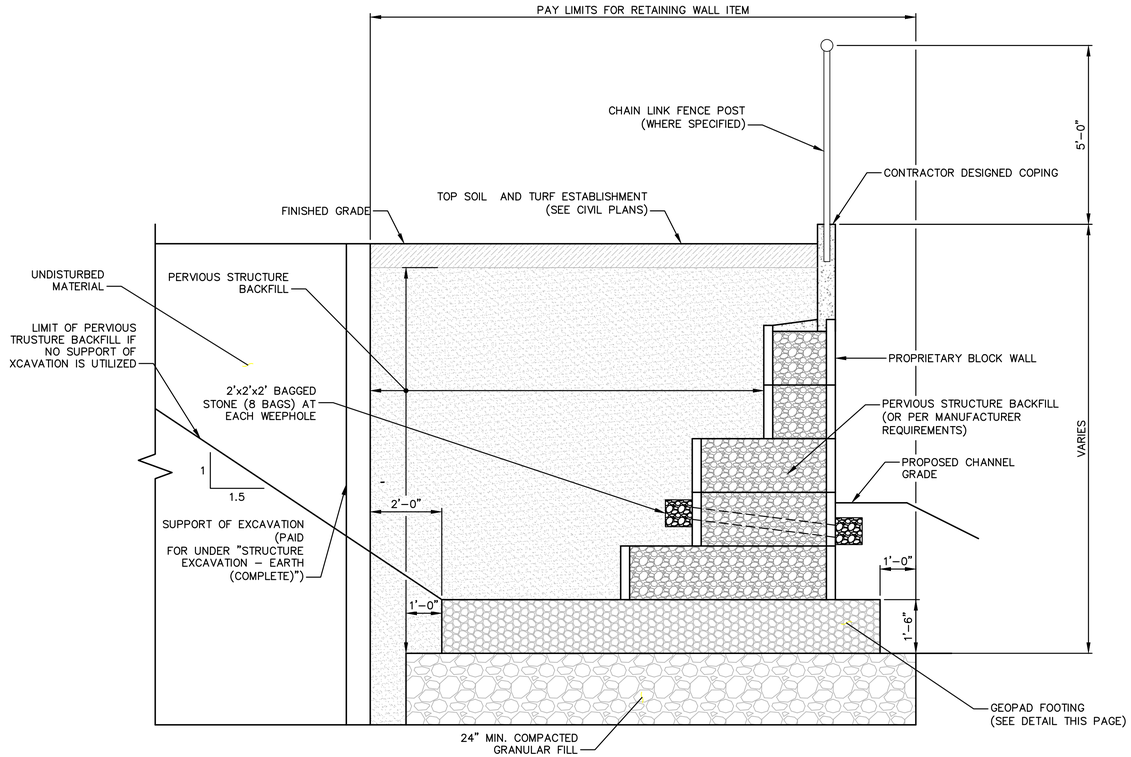

PROPRIETARY WALL TYPICAL SECTION

1/2" = 1'-0"

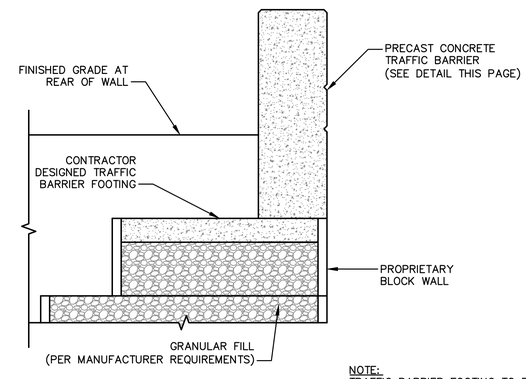

NOTE:
TRAFFIC BARRIER FOOTING TO BE CONTRACTOR DESIGNED AND SHALL WITHSTAND TL-2 IMPACT LOADING.

TOP OF WALL WITH TRAFFIC BARRIER

1/2" = 1'-0"

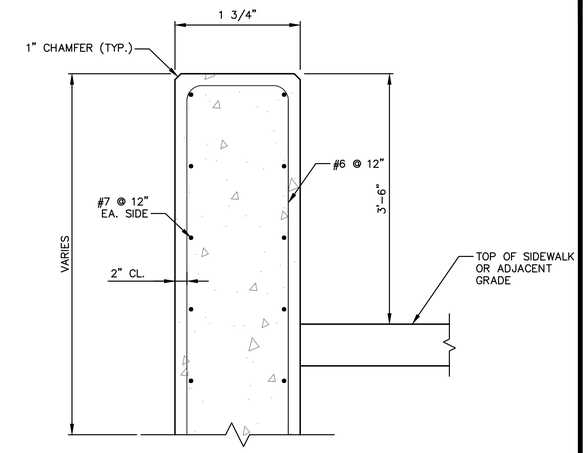

TRAFFIC BARRIER DETAIL

1" = 1'-0"

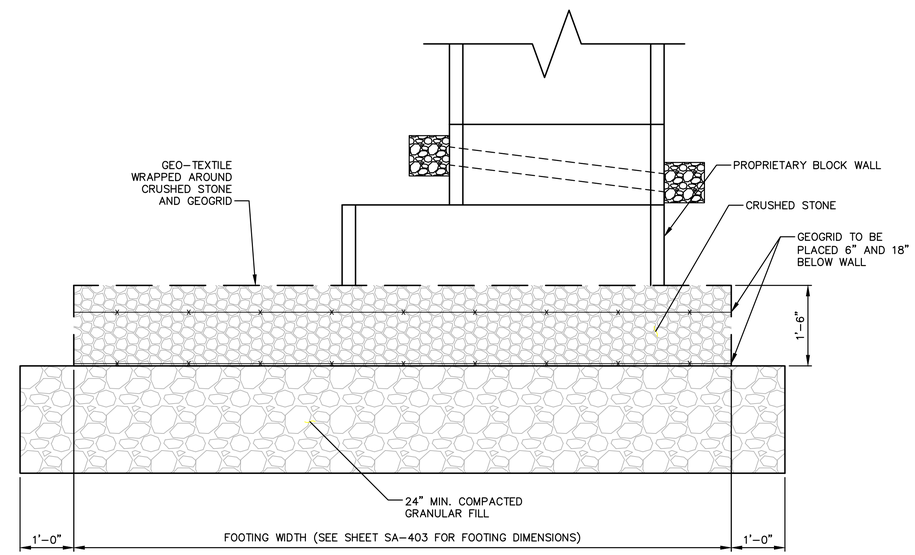

GEOPAD FOOTING DETAIL

3/4" = 1'-0"

NOTES:

1. RETAINING WALL TO BE "DOUBLEWAL INTERLOCKING PRECAST MODULAR WALL" OR APPROVED EQUAL.
2. RETAINING WALLS TO BE DESIGNED TO ACCOMODATE BRIDGE LOADINGS AT THE REQUIRED LOCATIONS, BASED ON THE REACTIONS PROVIDED IN THE CONTRACT DOCUMENTS.
3. CONTRACTOR TO PROVIDE PROPRIETARY BLOCK WALL (OR APPROVED EQUAL) STAMPED ENGINEER RETAINING WALL PLANS AND CALCULATIONS TO ENGINEER FOR REVIEW AND APPROVAL PRIOR TO CONSTRUCTION
4. GEOTECHNICAL REPORT AND BORING LOG DATA TO BE PROVIDED TO THE CONTRACTOR FOR USE IN THE RETAINING WALL DESIGN. CONTRACTOR TO PERFORM ANY ADDITIONAL REQUIRED SOIL TESTING PRIOR TO WALL DESIGN AND CONSTRUCTION, AT NO ADDITIONAL COST.

GEOPAD FOUNDATION NOTES:

1. GEOTEXTILE FABRIC TO BE WRAPPED AROUND CRUSHED STONE WITH A 1.5' OVERLAP. MATERIAL TO CONFORM TO CTDOT FORM 818 MATERIAL SPECIFICATIONS. GEOTEXTILE TO CONSIST OF 6 OZ. MIRAFI 160N OR APPROVED EQUIVALENT.
2. CRUSHED STONE TO MEET THE SPECIFICATIONS OF No. 3 COARSE AGGREGATE PER THE CTDOT FORM 818 MATERIAL SPECIFICATIONS TABLE M.01.02-2. CRUSHED STONE TO BE PLACED IN 6 TO 8 INCH LIFTS AND COMPACTED UNTIL FIRM AND STABLE.
3. GEOGRID TO CONSIST OF TENSAR TX160 OR APPROVED EQUIVALENT.
4. COMPACTED GRANULAR FILL TO MEET THE SPECIFICATIONS WITHIN CTDOT FORM 818.
5. GEOPAD FOUNDATION SHALL BE PAID UNDER THE LUMP SUM ITEM FOR RETAINING WALL (Site No. X.)

No.	DATE	DESCRIPTION	DESIGNER	REVIEWER

SEAL

SEAL

STATE OF CONNECTICUT · KRISTEN E. SOLOMONT · No. 22072 · LICENSED PROFESSIONAL ENGINEER

SCALE:
HORZ.: AS NOTED
VERT.: AS NOTED
DATUM:
HORZ.: NAD 83
VERT.: NAVD 88
0
GRAPHIC SCALE

FUSS & O'NEILL
146 HARTFORD ROAD
MANCHESTER, CONNECTICUT 06040
860.646.2469
www.fando.com

CITY OF MERIDEN
CHANNEL RETAINING WALLS
TYPICAL WALL DETAILS
BRIDGE REPLACEMENTS AND UTILITY IMPROVEMENTS
BUTLER STREET AND HANOVER STREET
MERIDEN CONNECTICUT

PROJ. No.: 20170932C11
DATE: FEBRUARY 27, 2024

SA-404

File Path: J:\DWG\P2017\0932\C11\Structural\Plan\20170932C11_14_RET WALL DETAILS.dwg Layout: SA-404-PH1 Plotted: Wed, February 28, 2024 - 11:59 AM User: astripsky
Plotter: AUTOCAD PDF (GENERAL DOCUMENTATION).PC3 CTB File: FO.STB
MS VIEW:
LAYER STATE:

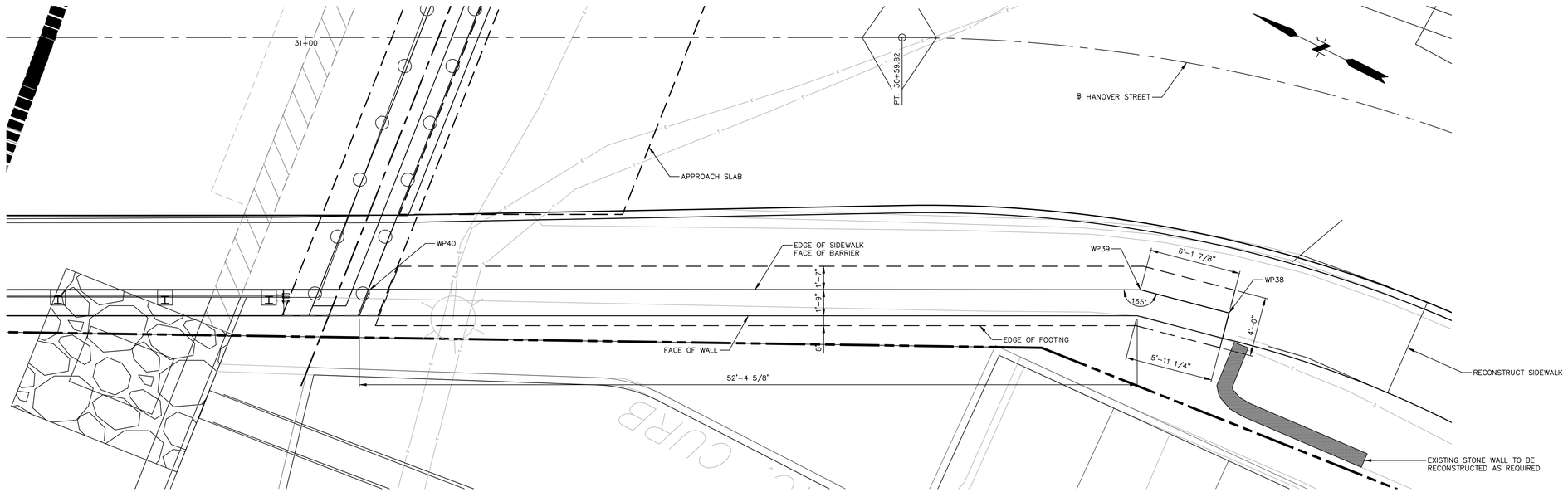

WALL 6 PLAN VIEW

SCALE: 1/4" = 1'-0"

WALL 6 WORKING POINTS – INSIDE FACE OF WALL				
WP #	NORTHING	EASTING	STATION	OFFSET
38	756169.872	985089.558	30+33.82	–15.95
39	756175.898	985088.293	30+41.00	–15.62
40	756229.943	985080.303	30+95.67	–17.00

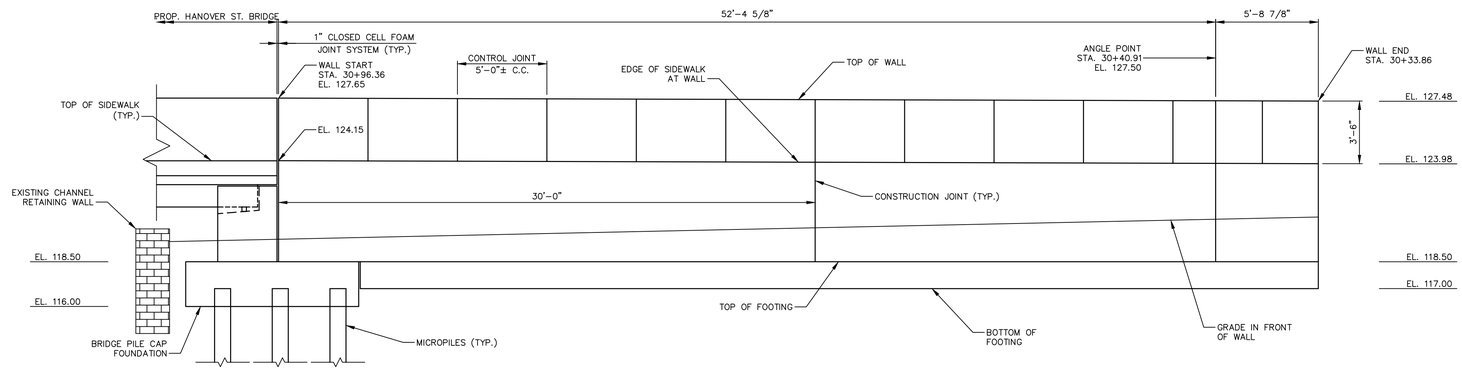

WALL 6 ELEVATION VIEW

SCALE: 1/4" = 1'-0"

File: J:\DWG\P2017\0932\C11\Structural\Plan\20170932C11_SA_500.dwg Layout: SA-501 Plotted: 2024-02-28 12:00 PM Saved: 2024-02-26 8:36 AM User: JTatar
MS VIEW: LAYER STATE: PC3: AUTOCAD PDF (GENERAL DOCUMENTATION).PC3 STB/CTB: FO.STB

No.	DATE	DESCRIPTION	DESIGNER	REVIEWER
####	####	####	####	####
####	####	####	####	####
####	####	####	####	####
####	####	####	####	####
####	####	####	####	####
####	####	####	####	####
####	####	####	####	####
####	####	####	####	####
####	####	####	####	####

SEAL

SEAL

STATE OF CONNECTICUT
KRISTEN E. SOLOWAY
No. 22072
LICENSED
PROFESSIONAL ENGINEER

SCALE:
HORZ.: ?" = ??'
VERT.:
DATUM:
HORZ.:
VERT.:
0 ?? ?? ??'
GRAPHIC SCALE

FUSS & O'NEILL
146 HARTFORD ROAD
MANCHESTER, CONNECTICUT 06040
860.646.2469
www.fando.com

CITY OF MERIDEN

RETAINING WALL 6

BRIDGE REPLACEMENT AND UTILITY IMPROVEMENTS
BUTLER STREET AND HANOVER STREET
MERIDEN CONNECTICUT

PROJ. No.: 20170932.C38
DATE: FEBRUARY 27, 2024

SA-501

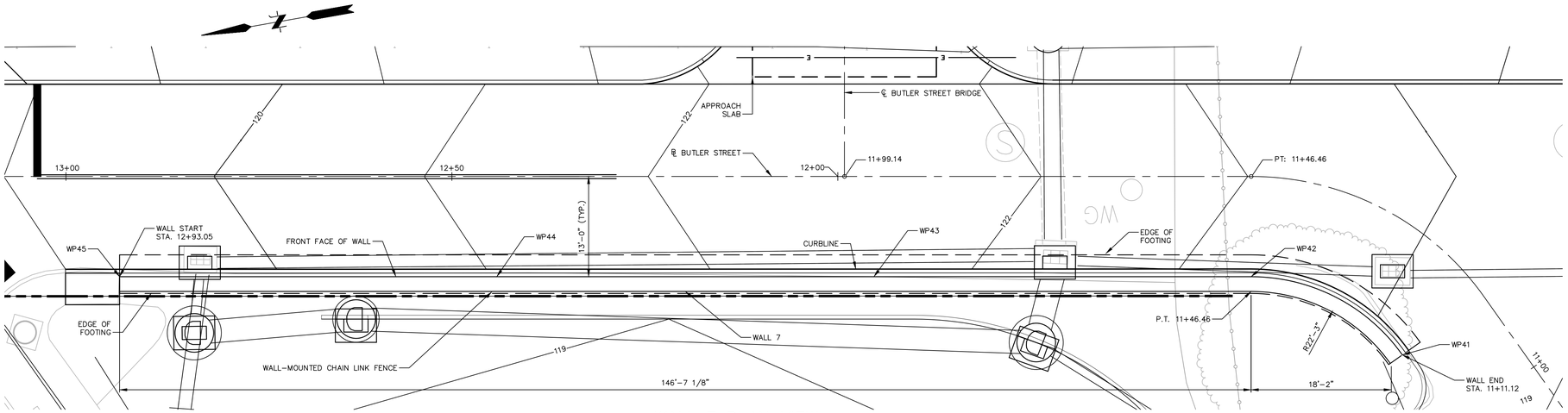

WALL 7 PLAN VIEW

SCALE: 1/8" = 1'-0"

WALL 7 WORKING POINTS – INSIDE FACE OF WALL				
WP #	NORTHING	EASTING	STATION	OFFSET
41	756003.604	984600.020	11+11.12	-13.00
42	756021.133	984613.419	11+46.46	-13.00
43	756069.250	984621.931	11+95.32	-13.00
44	756117.368	984630.442	12+44.19	-13.00
45	756165.486	984638.953	12+93.05	-13.00

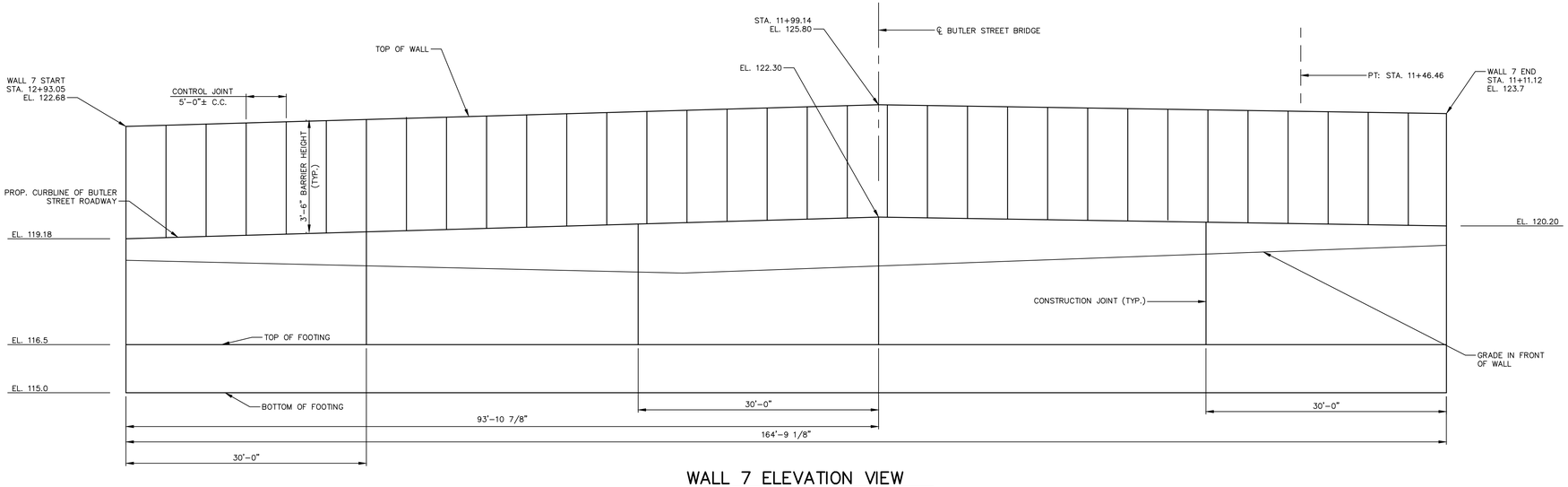

WALL 7 ELEVATION VIEW

HORIZ. SCALE: 1/8" = 1'-0"
VERT. SCALE: 1/2" = 1'-0"

File: J:\DWG\P2017\0932\C11\Structural\Plan\20170932C11_SA_500.dwg Layout: SA-502 Plotted: 2024-02-28 12:00 PM Saved: 2024-02-26 8:36 AM User: JTatar
MS VIEW: LAYER STATE: PC3: AUTOCAD PDF (GENERAL DOCUMENTATION).PC3 STB/CTB: FO.STB

No.	DATE	DESCRIPTION	DESIGNER	REVIEWER
####	####	####	####	####
####	####	####	####	####
####	####	####	####	####
####	####	####	####	####
####	####	####	####	####
####	####	####	####	####
####	####	####	####	####
####	####	####	####	####
####	####	####	####	####

SEAL

SEAL

STATE OF CONNECTICUT KRISTEN E. SOLDOWAY No. 22072 LICENSED PROFESSIONAL ENGINEER

SCALE:
HORZ.: AS NOTED
VERT.:
DATUM:
HORZ.: -
VERT.: -

FUSS & O'NEILL
146 HARTFORD ROAD
MANCHESTER, CONNECTICUT 06040
860.646.2469
www.fando.com

CITY OF MERIDEN

RETAINING WALL 7

BRIDGE REPLACEMENT AND UTILITY IMPROVEMENTS
BUTLER STREET AND HANOVER STREET
MERIDEN CONNECTICUT

PROJ. No.: 20170932.C38
DATE: FEBRUARY 27, 2024

SA-502

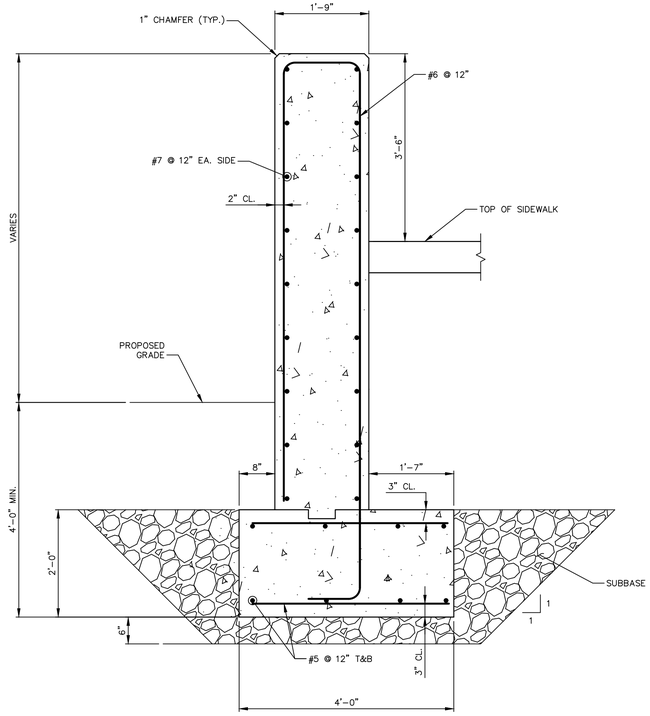

WALL 6 DETAILS
SCALE: 3/4" = 1'-0"

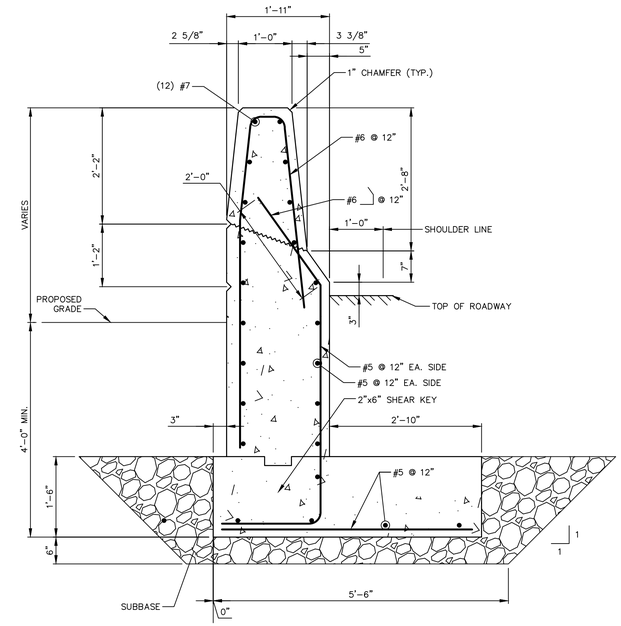

WALL 7 DETAILS
SCALE: 3/4" = 1'-0"

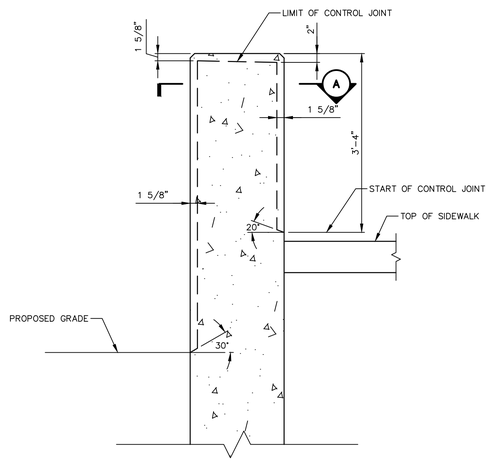

WALL 6 CONTROL JOINT DETAIL
SCALE: 3/4" = 1'-0"

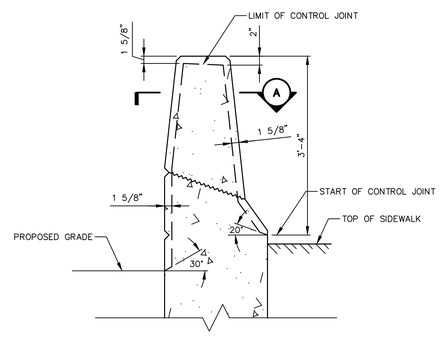

WALL 7 CONTROL JOINT DETAIL
SCALE: 3/4" = 1'-0"

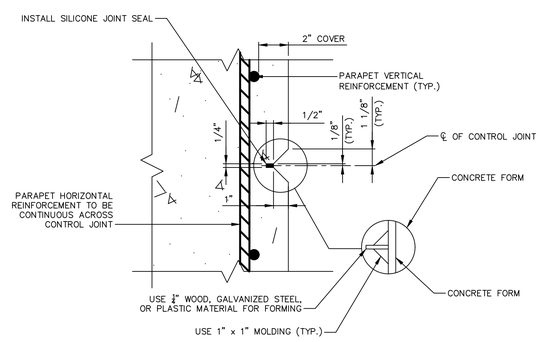

(A) PLAN SECTION – CONTROL JOINT DETAIL
SCALE: N.T.S.

No.	DATE	DESCRIPTION	DESIGNER	REVIEWER
####	####	####	####	####
####	####	####	####	####
####	####	####	####	####
####	####	####	####	####
####	####	####	####	####
####	####	####	####	####
####	####	####	####	####
####	####	####	####	####
####	####	####	####	####

SEAL

SEAL

STATE OF CONNECTICUT · KRISTEN E. SOUCHAK · No. 22072 · LICENSED PROFESSIONAL ENGINEER

SCALE:
HORZ.: ?" = ??'
VERT.:
DATUM:
HORZ.:
VERT.:
0 ?? ?? ??
GRAPHIC SCALE

FUSS & O'NEILL
146 HARTFORD ROAD
MANCHESTER, CONNECTICUT 06040
860.646.2469
www.fando.com

CITY OF MERIDEN

RETAINING WALL DETAILS

BRIDGE REPLACEMENT AND UTILITY IMPROVEMENTS
BUTLER STREET AND HANOVER STREET
MERIDEN CONNECTICUT

PROJ. No.: 20170932.C38
DATE: FEBRUARY 27, 2024

SA-503

File: J:\DWG\P20170932\C11\Structural\Plan\20170932C11_SA_500.dwg Layout: SA-503 Plotted: 2024-02-28 12:00 PM Saved: 2024-02-26 8:36 AM User: JTatar
PC3: AUTOCAD PDF (GENERAL DOCUMENTATION).PC3 STB/CTB: FO.STB
MS VIEW:
LAYER STATE:

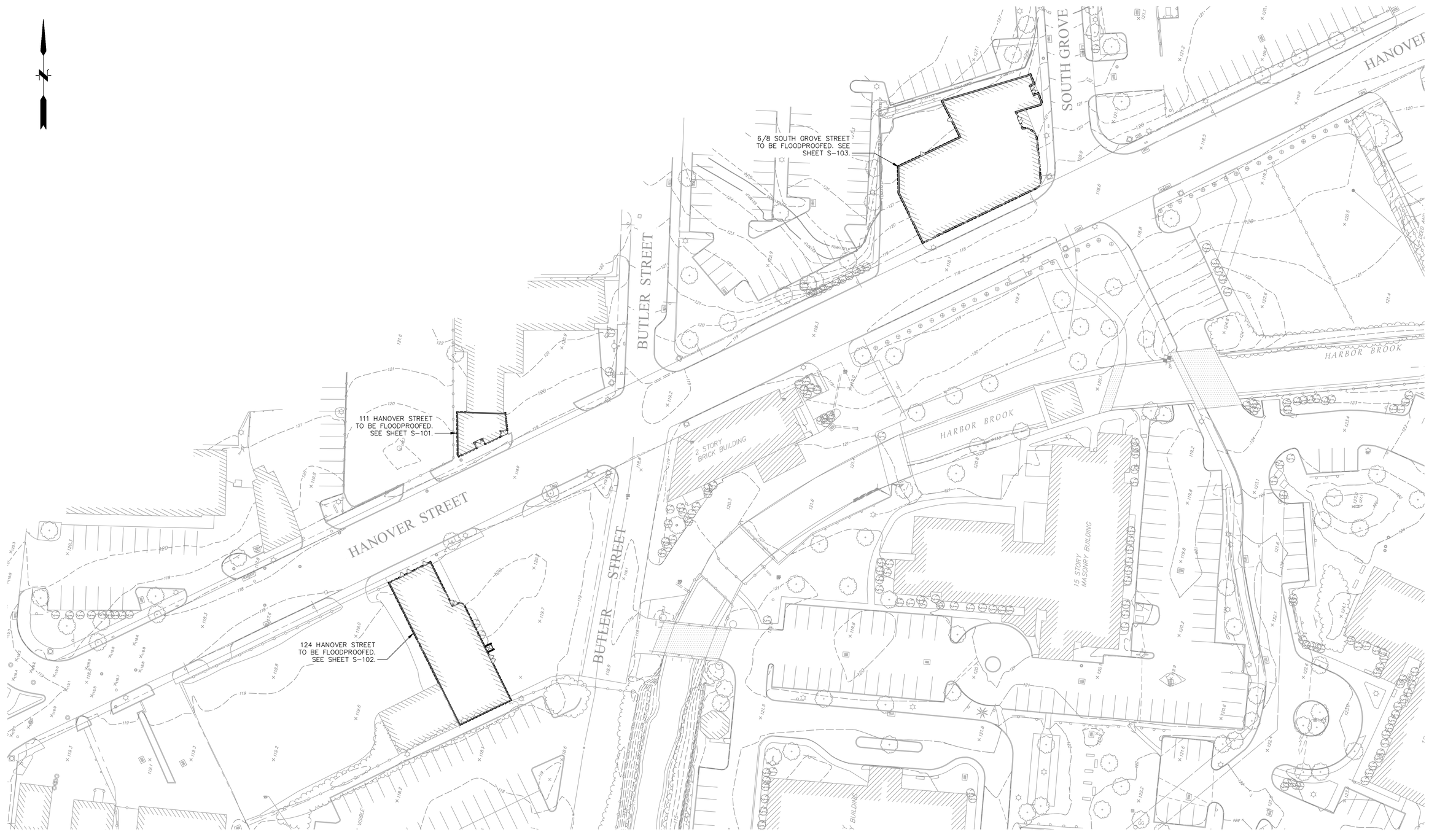

No.	DATE	DESCRIPTION	DESIGNER	REVIEWER

SEAL
STATE OF CONNECTICUT
JASON J. LEDOUX
26052
LICENSED
PROFESSIONAL ENGINEER

SEAL

SCALE:
HORZ.: 1/32" = 1'-0"
VERT.:
DATUM:
HORZ.:
VERT.:
32' 16' 0 32'
GRAPHIC SCALE

FUSS & O'NEILL
146 HARTFORD ROAD
MANCHESTER, CONNECTICUT 06040
860.646.2469
www.fando.com

CITY OF MERIDEN

FLOODPROOFING LAYOUT PLAN

BRIDGE REPLACEMENTS AND UTILITY IMPROVEMENTS
BUTLER STREET AND HANOVER STREET
MERIDEN CONNECTICUT

PROJ. No.: 20170932.C38
DATE: FEBRUARY 27, 2024

S-100

File: J:\DWG\P20170932\C11\Structural\Plan\20170932.C11_FLOODPROOFING.dwg Layout: S-100 Plotted: 2024-02-27 4:54 PM Saved: 2024-02-27 4:17 PM User: Shuffman
PC3: AUTOCAD PDF (GENERAL DOCUMENTATION).PC3 STB/CTB: FO.STB
LAYER STATE:
MS VIEW:

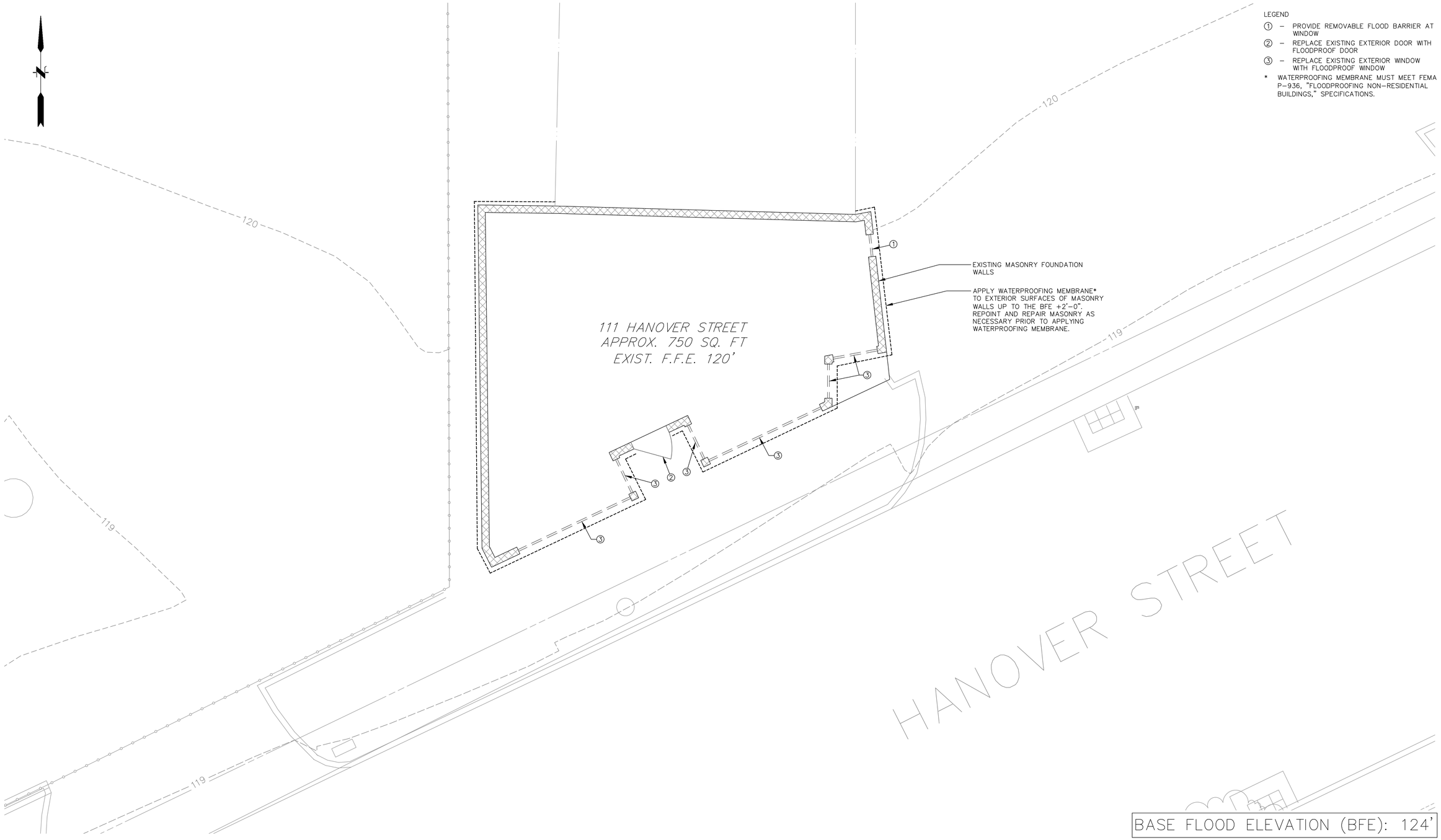

No.	DATE	DESCRIPTION	DESIGNER	REVIEWER

SEAL

STATE OF CONNECTICUT · JASON J. LEDOUX · 26052 · LICENSED · PROFESSIONAL ENGINEER

SEAL

SCALE:
HORZ.: 1/4" = 1'-0"
VERT.:
DATUM:
HORZ.:
VERT.:
4' 2' 0 4'
GRAPHIC SCALE

FUSS & O'NEILL
146 HARTFORD ROAD
MANCHESTER, CONNECTICUT 06040
860.646.2469
www.fando.com

CITY OF MERIDEN

111 HANOVER STREET FLOODPROOFING

BRIDGE REPLACEMENTS AND UTILITY IMPROVEMENTS
BUTLER STREET AND HANOVER STREET
MERIDEN CONNECTICUT

PROJ. No.: 20170932.C18
DATE: FEBRUARY 27, 2024

S-101

File: J:\DWG\P2017\0932\C11\Structural\Plan\20170932.C11_FLOODPROOFING.dwg Layout: S-101 Plotted: 2024-02-27 4:54 PM Saved: 2024-02-27 4:17 PM User: SHuffman
MS VIEW: LAYER STATE: PC3: AUTOCAD PDF (GENERAL DOCUMENTATION).PC3 STB/CTB: FO.STB

LEGEND

① – PROVIDE REMOVABLE FLOOD BARRIER AT WINDOW

② – REPLACE EXISTING EXTERIOR DOOR WITH FLOODPROOF DOOR

* WATERPROOFING MEMBRANE MUST MEET FEMA P–936, "FLOODPROOFING NON–RESIDENTIAL BUILDINGS," SPECIFICATIONS.

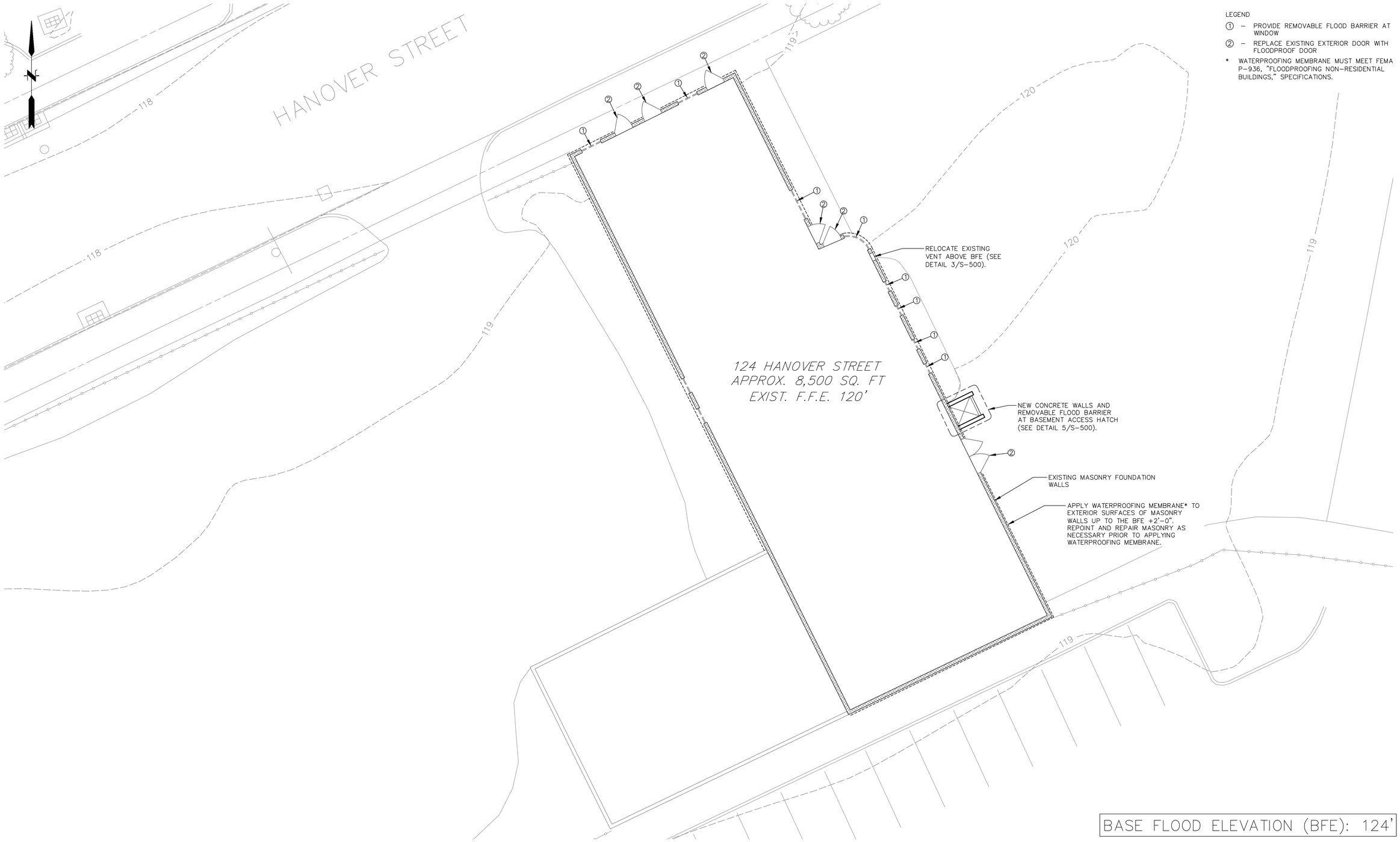

BASE FLOOD ELEVATION (BFE): 124'

No.	DATE	DESCRIPTION	DESIGNER	REVIEWER

SEAL
STATE OF CONNECTICUT
JASON J. LEDOUX
26052
LICENSED
PROFESSIONAL ENGINEER

SEAL

SCALE:
HORZ.: 1/8" = 1'-0"
VERT.:
DATUM:
HORZ.:
VERT.:
8' 4' 0 8'
GRAPHIC SCALE

FUSS & O'NEILL
146 HARTFORD ROAD
MANCHESTER, CONNECTICUT 06040
860.646.2469
www.fando.com

CITY OF MERIDEN

124 HANOVER STREET FLOODPROOFING

BRIDGE REPLACEMENTS AND UTILITY IMPROVEMENTS
BUTLER STREET AND HANOVER STREET

MERIDEN CONNECTICUT

PROJ. No.: 20170932.C38
DATE: FEBRUARY 27, 2024

S-102

File: J:\DWG\P2017\0932\C11\Structural\Plan\20170932.C11_FLOODPROOFING.dwg Layout: S-102 Plotted: 2024-02-27 4:54 PM Saved: 2024-02-27 4:17 PM User: SHuffman
MS VIEW:
LAYER STATE:
PC3: AUTOCAD PDF (GENERAL DOCUMENTATION).PC3 STB/CTB: FO.STB

LEGEND

① – PROVIDE REMOVABLE FLOOD BARRIER AT WINDOW

② – PROVIDE REMOVABLE FLOOD BARRIER AT DOOR (SEE DETAIL 2/S-500)

③ – REPLACE EXISTING EXTERIOR WINDOW WITH FLOODPROOF WINDOW.

* WATERPROOFING MEMBRANE MUST MEET FEMA P-936, "FLOODPROOFING NON-RESIDENTIAL BUILDINGS," SPECIFICATIONS.

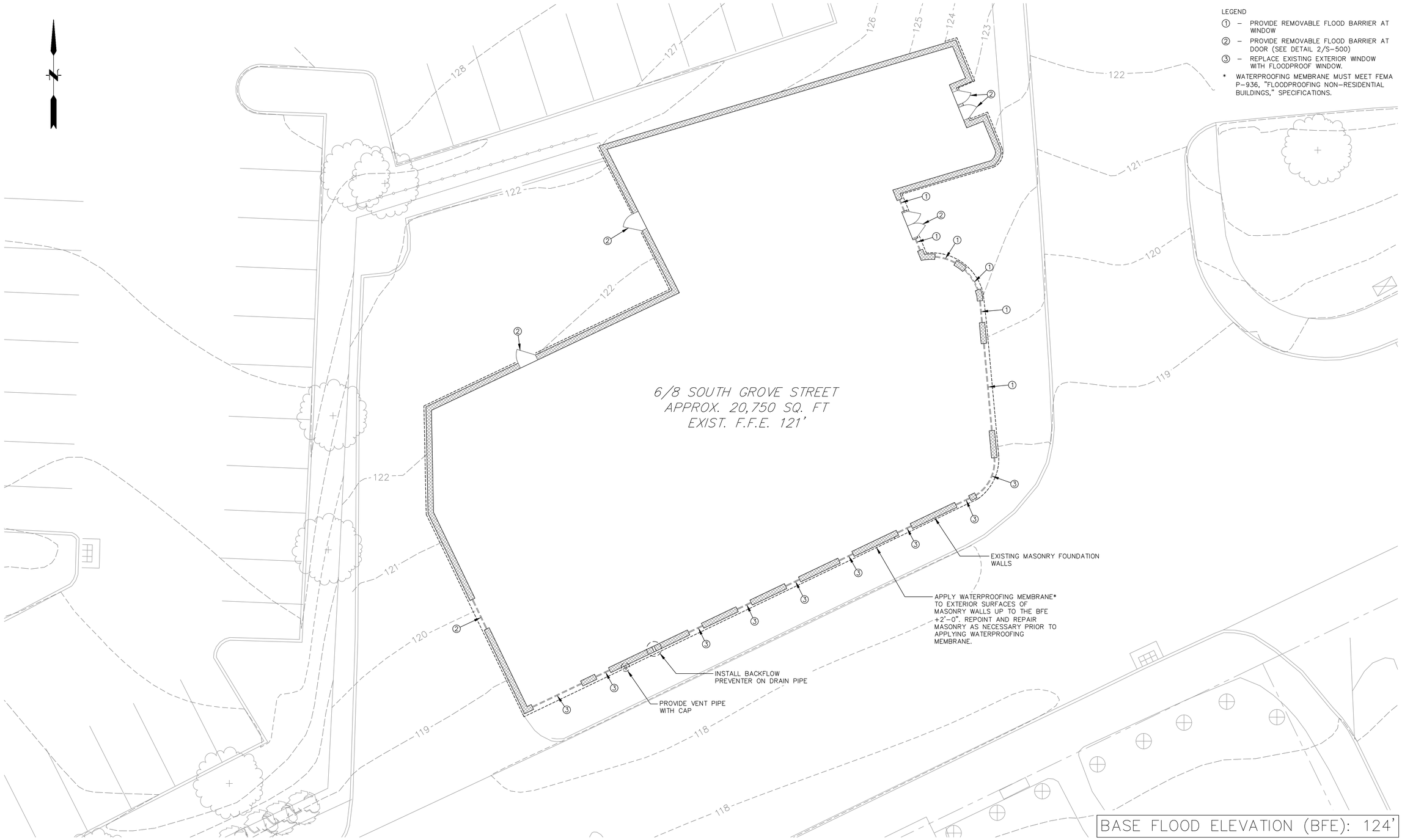

No.	DATE	DESCRIPTION	DESIGNER	REVIEWER

SEAL
STATE OF CONNECTICUT
JASON J. LEDOUX
26052
LICENSED
PROFESSIONAL ENGINEER

SEAL

SCALE:
HORZ.: 1/8" = 1'-0"
VERT.:
DATUM:
HORZ.:
VERT.:
8' 4' 0 8'
GRAPHIC SCALE

FUSS & O'NEILL
146 HARTFORD ROAD
MANCHESTER, CONNECTICUT 06040
860.646.2469
www.fando.com

CITY OF MERIDEN

6/8 SOUTH GROVE STREET FLOODPROOFING

BRIDGE REPLACEMENTS AND UTILITY IMPROVEMENTS
BUTLER STREET AND HANOVER STREET
MERIDEN CONNECTICUT

PROJ. No.: 20170932.C38
DATE: FEBRUARY 27, 2024

S-103

File: J:\DWG\P2017\0932\C11\Structural\Plan\20170932.C11_FLOODPROOFING.dwg Layout: S-103 Plotted: 2024-02-27 4:54 PM Saved: 2024-02-27 4:17 PM User: SHuffman
PC3: AUTOCAD PDF (GENERAL DOCUMENTATION).PC3 STB/CTB: FO.STB
LAYER STATE:
MS VIEW:

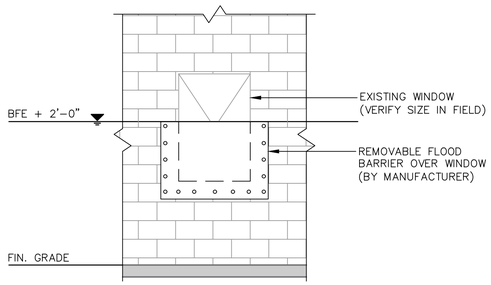

1 TYPICAL WINDOW BARRIER
1/2" = 1'-0"

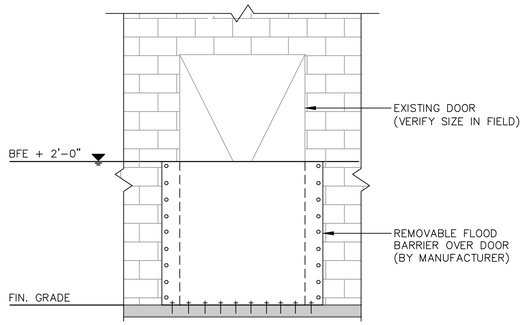

2 TYPICAL DOOR BARRIER
1/2" = 1'-0"

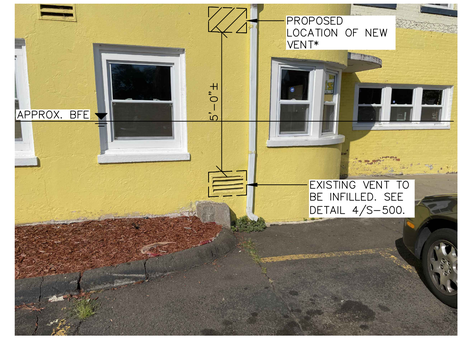

3 VENT RELOCATION
NOT TO SCALE
* CONTRACTOR TO VERIFY ANY ADDITIONAL HVAC WORK REQUIRED.

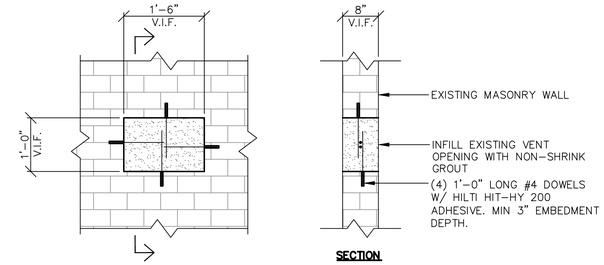

4 VENT OPENING INFILL
3/4" = 1'-0"

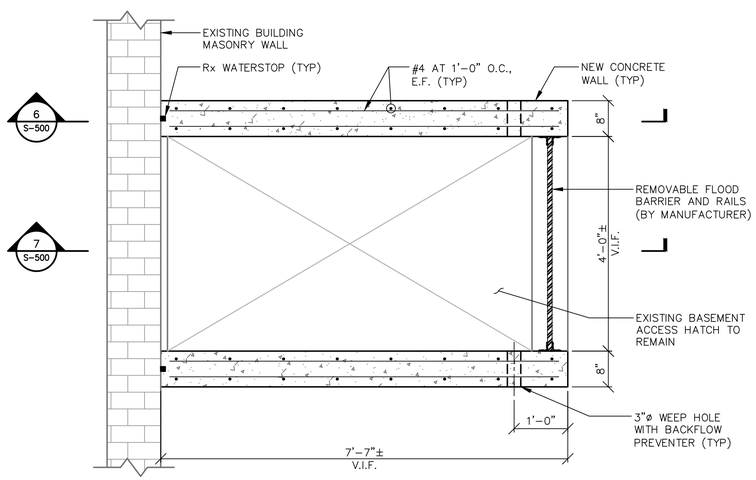

5 BASEMENT ACCESS HATCH – PLAN
3/4" = 1'-0"

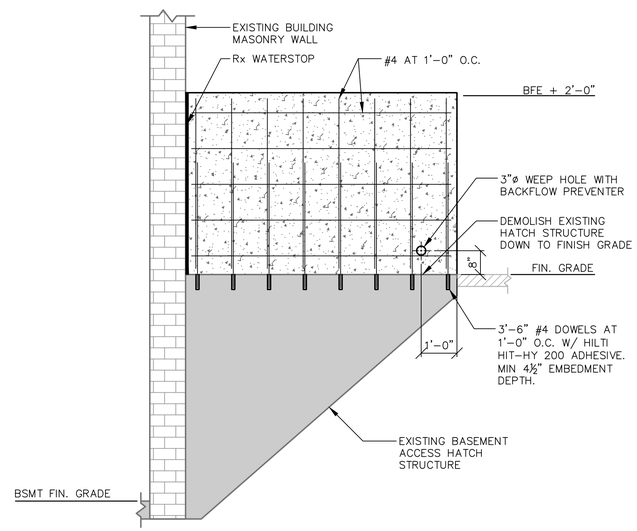

6 BASEMENT ACCESS HATCH – SECTION
1/2" = 1'-0"

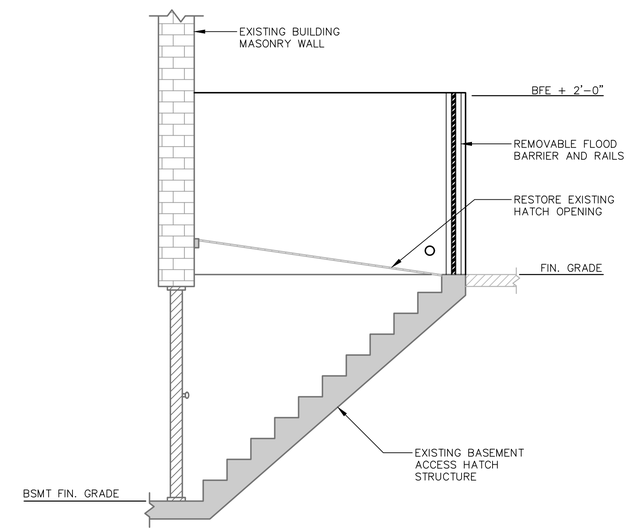

7 BASEMENT ACCESS HATCH – SECTION
1/2" = 1'-0"

File: J:\DWG\P20170932\C11\Structural\Plan\20170932.C11_FLOODPROOFING.dwg Layout: S-500 Plotted: 2024-02-27 4:55 PM Saved: 2024-02-27 4:17 PM User: SHuffman
PC3: AUTOCAD PDF (GENERAL DOCUMENTATION).PC3 STB/CTB: FO.STB
LAYER STATE:
MS VIEW:

No.	DATE	DESCRIPTION	DESIGNER	REVIEWER

SEAL
STATE OF CONNECTICUT
JASON J. LEDOUX
26052
LICENSED
PROFESSIONAL ENGINEER

SEAL

SCALE:
HORZ.: AS SHOWN
VERT.:
DATUM:
HORZ.:
VERT.:
0
GRAPHIC SCALE

FUSS & O'NEILL
146 HARTFORD ROAD
MANCHESTER, CONNECTICUT 06040
860.646.2469
www.fando.com

CITY OF MERIDEN

FLOODPROOFING DETAILS

BRIDGE REPLACEMENTS AND UTILITY IMPROVEMENTS
BUTLER STREET AND HANOVER STREET
MERIDEN CONNECTICUT

PROJ. No.: 20170932.C38
DATE: FEBRUARY 27, 2024

S-500

PLANTING NOTES:

1. ALL WORK PERFORMED UNDER THIS PLAN SHALL CONFORM TO SECTION 9.49 OF CT DOT STANDARD SPECIFICATIONS FORM 818 FOR THE FURNISHING, PLANTING, AND MULCHING OF TREES, SHRUBS, VINES, AND GROUNDCOVER PLANTS.
2. THE CONTRACTOR SHALL CONTACT "CALL BEFORE YOU DIG" AT 1-800-922-4455 PRIOR TO CONSTRUCTION.

PLANT LIST

KEY	BOTANICAL NAME	COMMON NAME	QTY.	SIZE
	TREES			
GT	GLEDITSIA TRIACANTHANOS VAR. INERMIS	THORNLESS HONEYLOCUST	8	2.5"-3" CAL.
	SHRUBS			
FG	FOTHERGILLA GARDENII 'BLUE MIST'	DWARF FOTHERGILLA	6	24-30"
IG	ILEX GLABRA 'SHAMROCK'	SHAMROCK INKBERRY	10	24-30"
IV	ILEX VERTICILLATA 'RED SPRITE'	RED SPRITE WINTERBERRY	4	24-30"
IVJ	ILEX VERTICILLATA 'JIM DANDY'	JIM DANDY WINTERBERRY	1	24-30"
JH	JUNIPERUS HORIZONTALIS 'BAR HARBOR'	BAR HARBOR SPREADING JUNIPER	11	18-24" SPRD.

LEGEND (THIS SHEET ONLY)

KEY	SYMBOL	DESCRIPTION	QTY.
LANDSCAPE			
1		TURF ESTABLISHMENT LAWN	± 89,094 SF

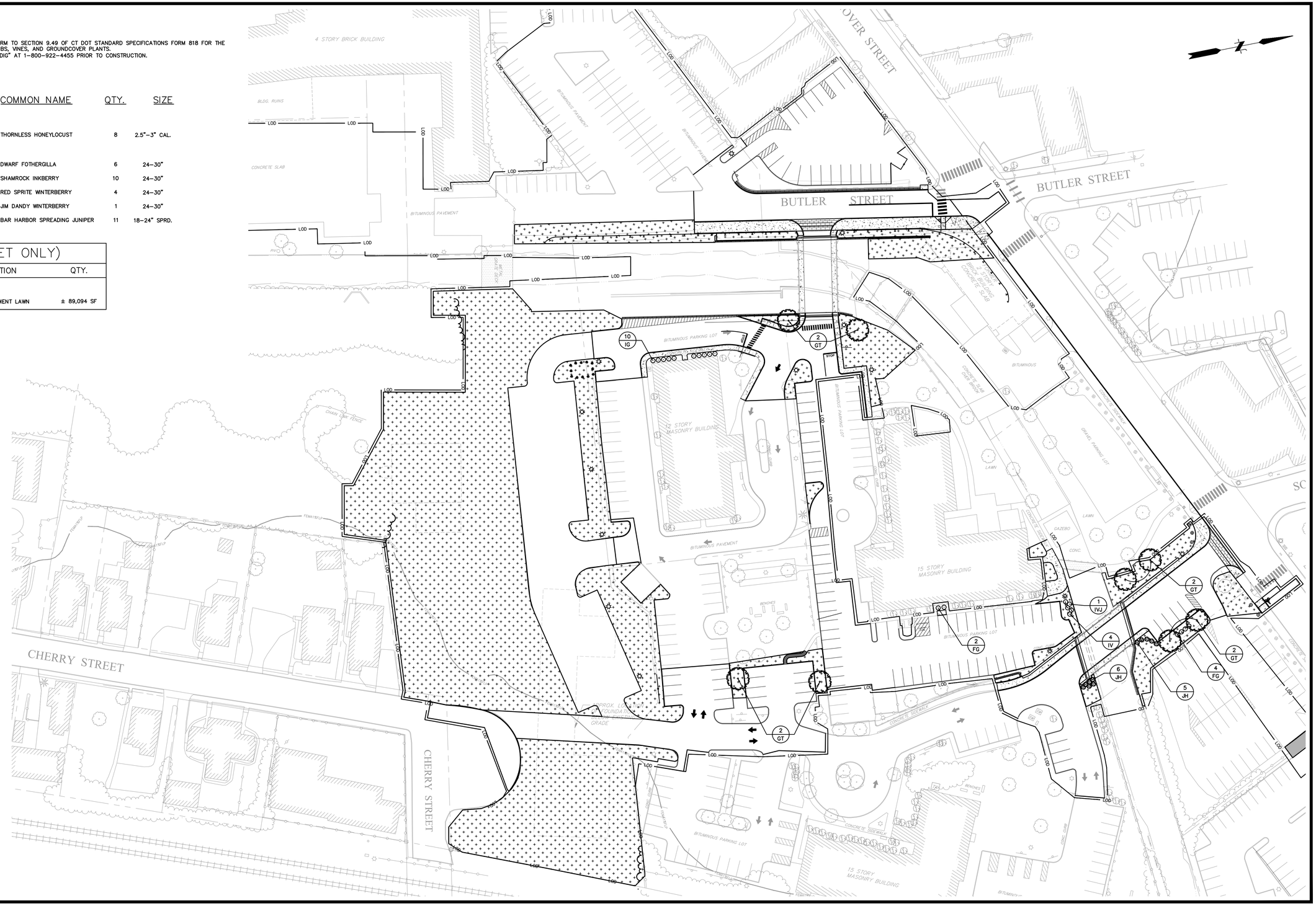

No.	DATE	DESCRIPTION	DESIGNER	REVIEWER
1.				

SEAL

STATE OF CONNECTICUT · DEAN E. AUDETT · No. 17623 · LICENSED PROFESSIONAL ENGINEER

SCALE:
HORZ.: 1" = 40'
VERT.:
DATUM:
HORZ.: NAD 83
VERT.: NAVD 88
40 20 0 40
GRAPHIC SCALE

FUSS & O'NEILL
146 HARTFORD ROAD
MANCHESTER, CONNECTICUT 06040
860.646.2469
www.fando.com

CITY OF MERIDEN

LANDSCAPING PLAN

BRIDGE REPLACEMENT AND UTILITY IMPROVEMENTS
BUTLER STREET AND HANOVER STREET

MERIDEN CONNECTICUT

PROJ. No.: 20170932.C38
DATE: FEBRUARY 27, 2024

LP-101

File Path: J:\DWG\P2017\0932\C11\Civil\Plan\20170932C11_LND-02.dwg Layout: LP-101 (PH1) Plotted: Tue, February 27, 2024 - 4:55 PM User: shuffman
Plotter: AUTOCAD PDF (GENERAL DOCUMENTATION).PC3 CTB File: FO.STB
MS VIEW:
LAYER STATE:

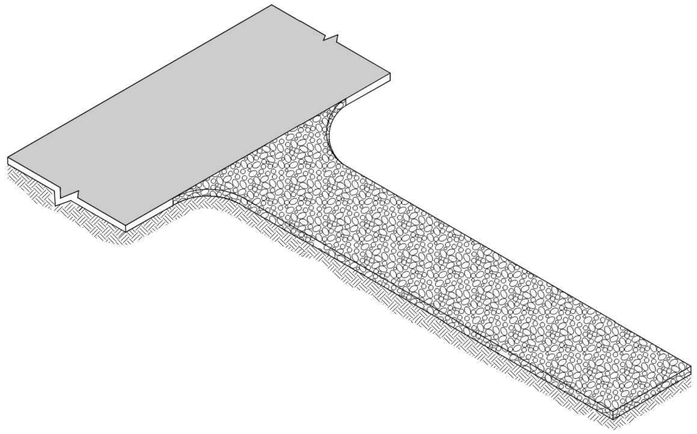

ANTI-TRACKING PAD

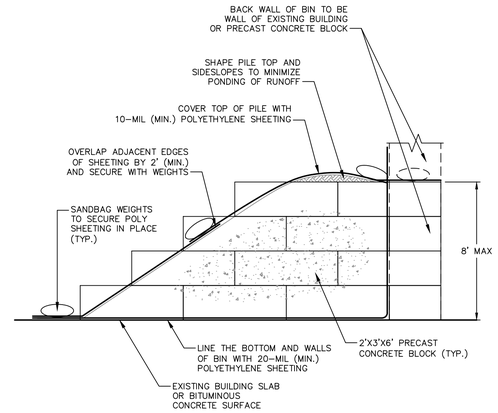

NOTES:

1. CONTRACTOR SHALL SIZE BIN WIDTH AND DEPTH TO ACCOMMODATE CONSTRUCTION VEHICLE ACCESS AND REQUIRED STORAGE VOLUME.

TEMPORARY WASTE STOCKPILE AREA

SCALE: NOT TO SCALE

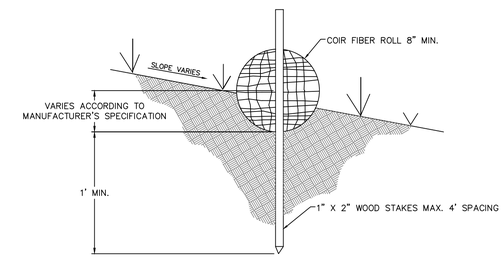

SEDIMENTATION CONTROL COIR FIBER ROLL SYSTEM ENTRENCHMENT DETAIL

SCALE: NOT TO SCALE

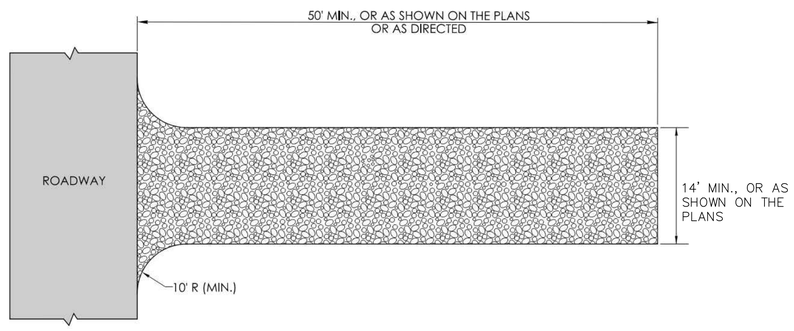

PLAN

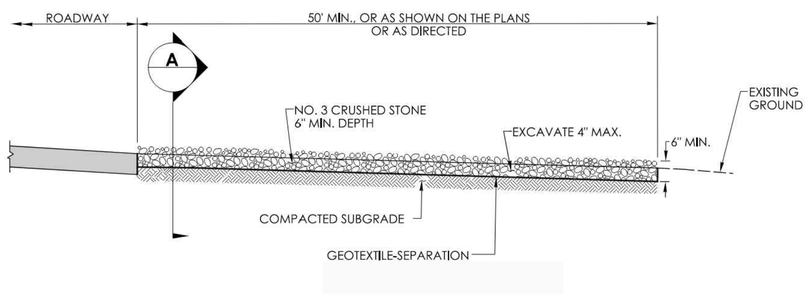

ELEVATION

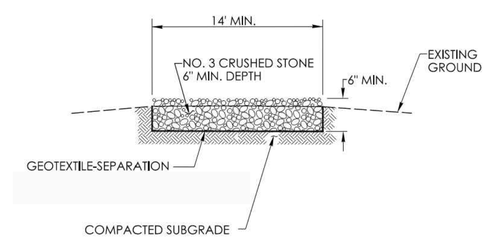

SECTION A

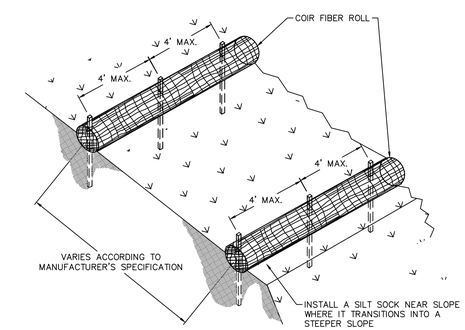

SEDIMENTATION CONTROL COIR FIBER ROLL SYSTEM INSTALLATION

SCALE: NOT TO SCALE

No.	DATE	DESCRIPTION	DESIGNER	REVIEWER

STATE OF CONNECTICUT · DEAN E. AUDER · No. 17623 · LICENSED PROFESSIONAL ENGINEER

SEAL

SCALE: HORZ.: NOT TO SCALE VERT.:
DATUM: HORZ.: VERT.:

FUSS & O'NEILL
146 HARTFORD ROAD
MANCHESTER, CONNECTICUT 06040
860.646.2469
www.fando.com

CITY OF MERIDEN

EROSION AND SEDIMENT CONTROL DETAILS

BRIDGE REPLACEMENTS AND UTILITY IMPROVEMENTS
BUTLER STREET AND HANOVER STREET
MERIDEN CONNECTICUT

PROJ. No.: 20170932.C38
DATE: FEBRUARY 27, 2024

CD-101

File Path: J:\DWG\P\20170932\C11\Civil\Plan\20170932C11_DET01.dwg, Layout: CD-101 (PHASE 1), Plotted: Tue, Feb 27, 2024 - 4:55 PM User: SHuffman
PC3: AUTOCAD PDF (GENERAL DOCUMENTATION).PC3 STB/CTB: FO.STB
LAYER STATE:
MS VIEW:

NOTES:

1.) INSTALL GEOTEXTILE FENCE & WOOD STAKES AS RECOMMENDED BY MANUFACTURER.

2.) GEOTEXTILE FENCE SUBJECT TO HEAVY LOADS SHALL BE REINFORCED WITH FARM FENCING & STEEL POSTS (0.5 POUNDS STEEL / LIN. FT.) THE MINIMUM POST LENGTH SHALL BE 5'-0".

3.) SYNTHETIC FILTER FABRIC SHALL BE A PERVIOUS SHEET OF PROPYLENE, NYLON, POLYESTER OR ETHYLENE FILAMENTS AND SHALL BE CERTIFIED BY THE MANUFACTURER OR SUPPLIER AS CONFORMING TO THE FOLLOWING REQUIREMENTS:

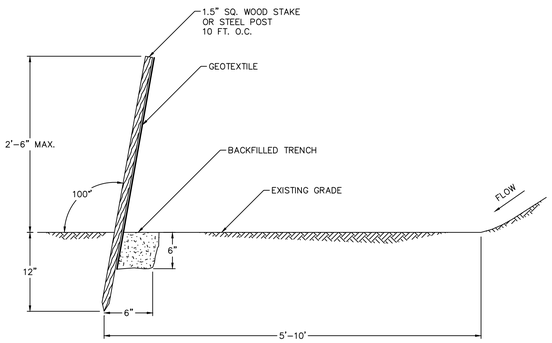

SEDIMENTATION CONTROL GEOTEXTILE FENCE SYSTEM

SCALE: NOT TO SCALE

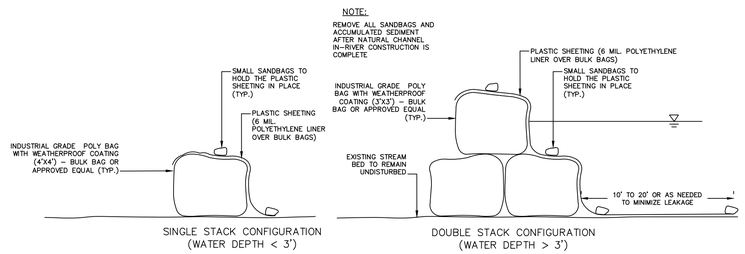

SINGLE STACK CONFIGURATION (WATER DEPTH < 3')

DOUBLE STACK CONFIGURATION (WATER DEPTH > 3')

WATER HANDLING TEMPORARY SANDBAG COFFERDAM

SCALE: NOT TO SCALE

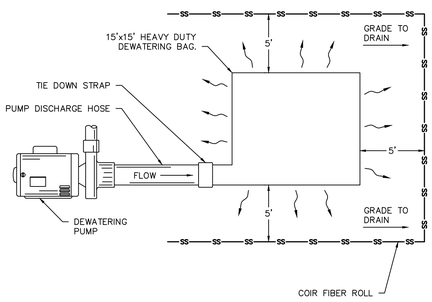

DEWATERING BAG

SCALE: NOT TO SCALE

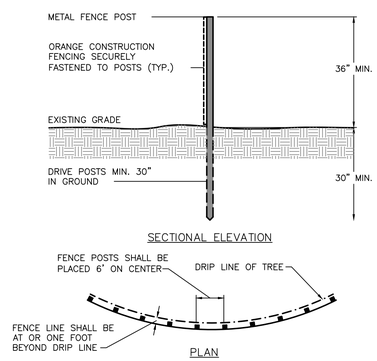

SECTIONAL ELEVATION

PLAN

TREE PROTECTION

SCALE: NOT TO SCALE

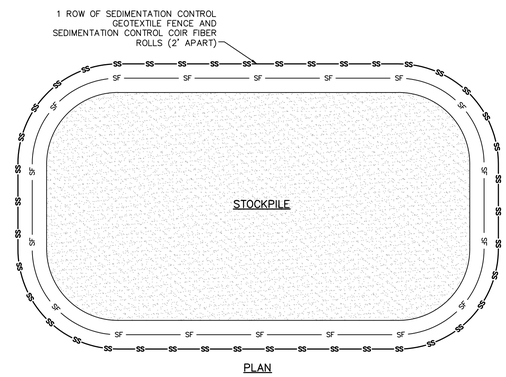

PLAN

TEMPORARY STAGING AND STORAGE AREA

SCALE: NOT TO SCALE

File Path: J:\DWG\P2017\0932\C11\Civil\Plan\20170932C11_DET01.dwg, Layout: CD-102 (PHASE 1), Plotted: Tue, Feb 27, 2024 - 4:55 PM User: SHuffman
MS VIEW: LAYER STATE: PC3: AUTOCAD PDF (GENERAL DOCUMENTATION).PC3 STB/CTB: FO.STB

No.	DATE	DESCRIPTION	DESIGNER	REVIEWER

STATE OF CONNECTICUT DEAN E. AUDET No. 17623 LICENSED PROFESSIONAL ENGINEER

SEAL

SCALE:
HORZ.: NOT TO SCALE
VERT.:
DATUM:
HORZ.:
VERT.:

FUSS & O'NEILL
146 HARTFORD ROAD
MANCHESTER, CONNECTICUT 06040
860.646.2469
www.fando.com

CITY OF MERIDEN

EROSION AND SEDIMENT CONTROL DETAILS

BRIDGE REPLACEMENTS AND UTILITY IMPROVEMENTS
BUTLER STREET AND HANOVER STREET
MERIDEN CONNECTICUT

PROJ. No.: 20170932.C38
DATE: FEBRUARY 27, 2024

CD-102

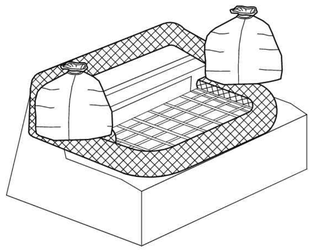

FIBER ROLL AROUND
TYPE "C" OR "C-L" CATCH BASIN TOP

NOTE: THIS ITEM WILL BE MEASURED BY EACH SEDIMENT CONTROL SYSTEM AT CATCH BASIN

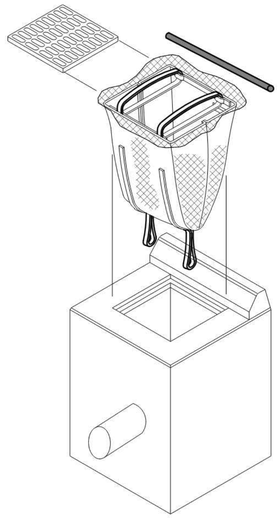

INLET SEDIMENT CONTROL DEVICE
AT TYPE "C" OR "C-L" CATCH BASIN

NOTE: THIS ITEM WILL BE MEASURED BY EACH SEDIMENT CONTROL SYSTEM AT CATCH BASIN

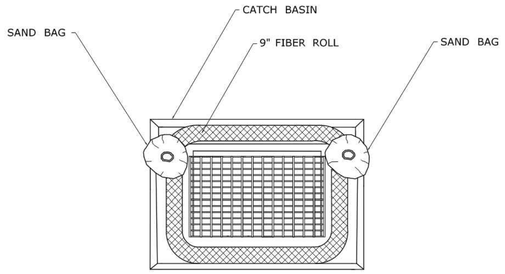

PLAN

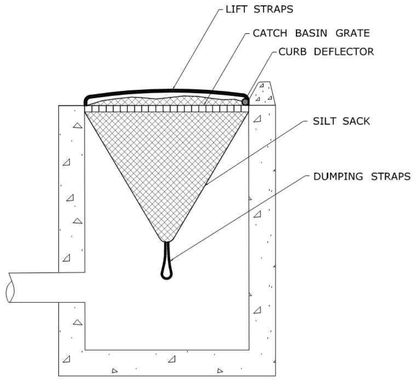

SECTION

REV.	DATE	REVISION DESCRIPTION

DESIGNER/DRAFTER: CHECKED BY:

SIGNATURE/ BLOCK: APPROVED BY:

OFFICE OF ENGINEERING
2800 BERLIN TURNPIKE
NEWINGTON, CT 06111

STATE OF CONNECTICUT
DEPARTMENT OF TRANSPORTATION

PROJECT NUMBER: 0000-0000
PROJECT DESCRIPTION: SAMPLE PROJECT DESCRIPTION
TOWN(S): SAMPLE TOWN(S)
DRAWING TITLE: EROSION CONTROL MEASURES AT CATCH BASINS - FIBER ROLL AND SILT SACK

DRAWING NO.
SHEET NO.

LASTED SAVED BY: RichardEH FILE NAME: W:\CT_CONNECT_DDE\CT_Configuration\Organization\Cell\CTDOT_Borders_Contract.cel
PLOTTED DATE: 11/23/2022

File Path: J:\DWG\P20170932\C11\Civil\Plan\20170932C11_DET01.dwg, Layout: CD-103 (PHASE 1), Plotted: Tue, Feb 27, 2024 - 4:55 PM User: SHuffman
PC3: AUTOCAD PDF (GENERAL DOCUMENTATION).PC3 STB/CTB: FO.STB
LAYER STATE:
MS VIEW:

No.	DATE	DESCRIPTION	DESIGNER	REVIEWER

STATE OF CONNECTICUT
DEAN E. AUDETT
No. 17684
LICENSED PROFESSIONAL ENGINEER

SEAL

SCALE:
HORZ.: NOT TO SCALE
VERT.:
DATUM:
HORZ.:
VERT.:

FUSS & O'NEILL
146 HARTFORD ROAD
MANCHESTER, CONNECTICUT 06040
860.646.2469
www.fando.com

CITY OF MERIDEN

EROSION AND SEDIMENT CONTROL DETAILS

BRIDGE REPLACEMENTS AND UTILITY IMPROVEMENTS
BUTLER STREET AND HANOVER STREET

MERIDEN CONNECTICUT

PROJ. No.: 20170932.C38
DATE: FEBRUARY 27, 2024

CD-103

SANITARY SEWER MAIN EXTENSION STANDARD NOTES:

1. The sanitary sewer main and service connection must be constructed in accordance with the City of Meriden Department of Public Works Standards and Specifications.

2. The Contractor must contact "Call Before You Dig" at 1-800-922-4455 for location and marking of all existing utilities prior to any excavation.

3. Upon completion of the sanitary sewer main installation, as-built plans must be submitted to the City of Meriden Engineering Division and certified by a licensed Land Surveyor or Civil Engineer. These plans must be in accordance with the Engineering Division standards.

4. Sanitary sewer lines shall be a minimum of ten feet apart horizontally and 18" apart vertically from any water line.

5. A pre-construction meeting must be held one week prior to beginning construction to include the Contractor, Design Engineering, and City Engineering staff. The Contractor shall be responsible for organizing this meeting.

6. The City Public Works Facility Inspector must be notified by the Contractor a minimum of 48 hours prior to beginning construction.

7. Final wye locations must be coordinated with the individual property owners prior to beginning construction.

8. A public hearing must be held for any sanitary sewer main extension and Public Utilities Commission approval will be required.

9. Sanitary sewer main lines must pass a low pressure air test per City of Meriden Specifications. TV/videotape inspection of the main line will be required per City of Meriden Requirements.

10. Sanitary sewer manholes must pass a vacuum test per City of Meriden Specifications.

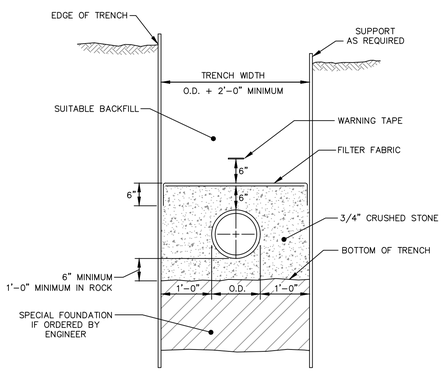

TYPICAL TRENCH SECTION SANITARY SEWER

SCALE: NOT TO SCALE

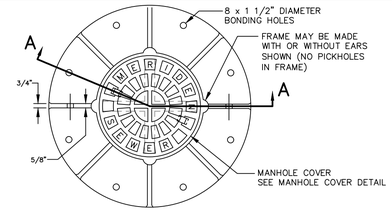

PLAN

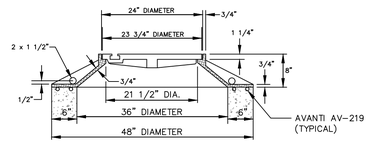

FRAME WEIGHT 427 LBS ±3%
COVER WEIGHT 175 LBS ±3%

SECTION A-A

NOTES

1. MANHOLE FRAME AND COVER TO BE LeBARON FOUNDARY INC. CATALOG NUMBER LJ 116 OR APPROVED EQUAL WITH A MINIMUM WEIGHT OF 602 LBS ±3%

2. MACHINE BEARING SURFACE REQUIRED ON THE FRAME SEAT AND COVER.

SANITARY SEWER MANHOLE FRAME

SCALE: NOT TO SCALE

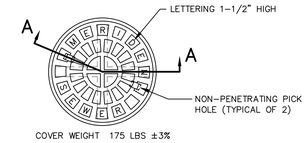

COVER WEIGHT 175 LBS ±3%

PLAN

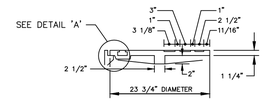

SECTION A-A

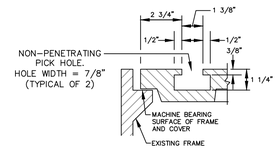

DETAIL 'A'

SANITARY SEWER MANHOLE COVER

SCALE: NOT TO SCALE

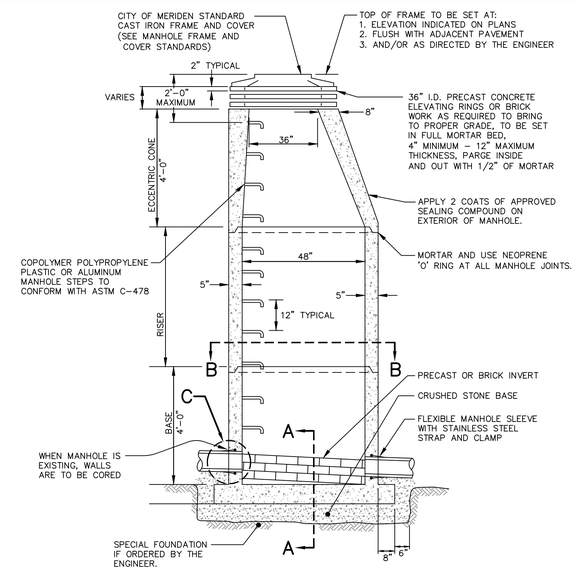

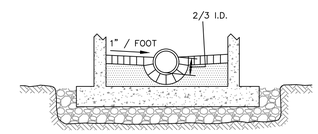

SECTION A-A

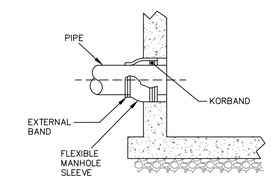

DETAIL C

CORING OF EXISTING MANHOLE

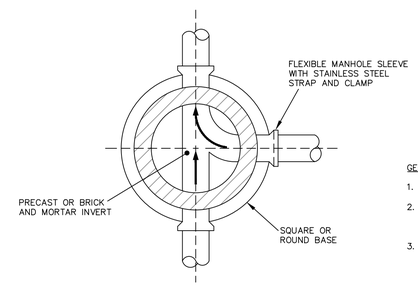

SECTION B-B

GENERAL NOTES FOR MANHOLES:

1. Backfill all manholes with bank-run gravel.

2. All pipe, chimney, and drop encasements to be class 'A' concrete. Class 'A' concrete shall be 3000 psi strength at 28 days.

3. Manholes which are located in rights-of-way off City streets shall have bolt down manhole covers.

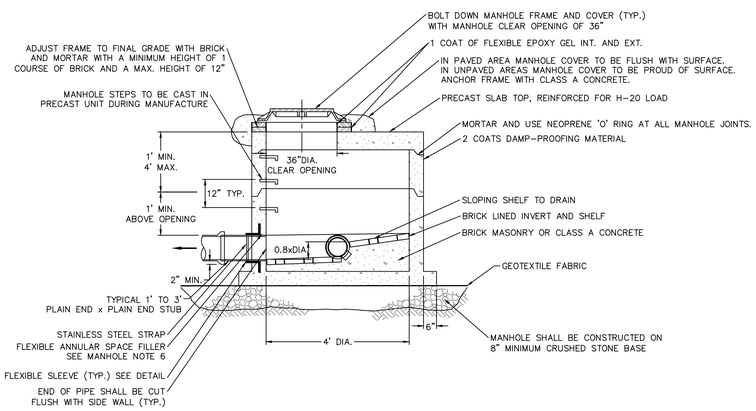

NOTES:

1. FLAT TOP MANHOLE TO BE USED WHERE HEIGHT PROHIBITS THE USE OF CONE SECTION.

2. FLAT TOP MANHOLE FRAME, COVER AND STEPS SHALL BE PLACED ON THE DOWNSTREAM SIDE

3. NO PRECAST INVERTS ON INSIDE OF MANHOLE, MUST CAST INVERT IN FIELD.

FLAT TOP MANHOLE

SCALE: NOT TO SCALE

MANHOLE NOTES

1. ALL PIPES SHALL BE CUT FLUSH WITH INSIDE WALL OF STRUCTURE.

2. MANHOLES SHALL BE PLACED ON 8" MINIMUM CRUSHED STONE BASE.

3. INSTALL RUBBER PLUGS IN LIFTING HOLES.

4. MANHOLES SHALL RECEIVE 2 COATS OF DAMP-PROOFING MATERIAL PRIOR TO DELIVERY TO THE SITE.

5. PROVIDE WATERTIGHT STUB AND FLEXIBLE SLEEVE AS NOTED ON THE DRAWINGS OR AS DIRECTED BY THE ENGINEER.

6. PIPE TO MANHOLE JOINTS SHALL BE SEALED WATERTIGHT BY USE OF PRE-MOLDED ELASTOMERIC SEALED JOINTS CAST INTO CONCRETE MANHOLE BASE AND SHALL CONFORM TO ASTM C 443 AND ASTM C 923.

7. MANHOLE JOINTS SHALL CONFORM TO ATSM C443.

8. MANHOLE STEPS SHALL BE STEEL REINFORCED POLYPROPYLENE OR ALUMINUM.

9. WHERE THE DIFFERENCE IN ELEVATION BETWEEN THE INCOMING SEWER AND THE MANHOLE INVERT IS 24" OR LESS, THE INVERT SHALL BE FILLETED.

10. WHEN DIRECTED BY THE ENGINEER, REMOVE UNSUITABLE MATERIAL BELOW TYPICAL TRENCH SUBGRADE AND INCREASE THE DEPTH OF BEDDING WRAPPED IN GEOTEXTILE FABRIC.

11. PAYMENT DEPTHS ARE MEASURED FROM TOP OF CONE TO INVERT OF STRUCTURE.

12. NO PRECAST INVERTS, MUST BE BUILT IN FIELD.

SANITARY MANHOLE NOTES

SCALE: NOT TO SCALE

SANITARY SEWER MANHOLE

SCALE: NOT TO SCALE

No.	DATE	DESCRIPTION	DESIGNER	REVIEWER

STATE OF CONNECTICUT · DEAN E. AUBERT · No. 17621 · LICENSED PROFESSIONAL ENGINEER

SEAL

SCALE:
HORZ.: NOT TO SCALE
VERT.:
DATUM:
HORZ.:
VERT.:

FUSS & O'NEILL
146 HARTFORD ROAD
MANCHESTER, CONNECTICUT 06040
860.646.2469
www.fando.com

CITY OF MERIDEN

SANITARY SEWER DETAILS

BRIDGE REPLACEMENTS AND UTILITY IMPROVEMENTS
BUTLER STREET AND HANOVER STREET

MERIDEN CONNECTICUT

PROJ. No.: 20170932.C38
DATE: FEBRUARY 27, 2024

CD-104

File Path: J:\DWG\P20170932\C11\Civil\Plan\20170932C11_DET01.dwg, Layout: CD-104(PHASE 1), Plotted: Tue, Feb 27, 2024 - 4:55 PM User: SHuffman
PC3: AUTOCAD PDF (GENERAL DOCUMENTATION).PC3 STB/CTB: FO.STB
LAYER STATE:
MS VIEW:

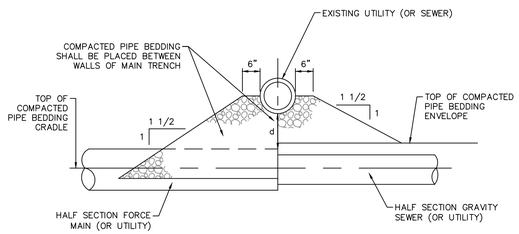

TYPE A (d > 12")

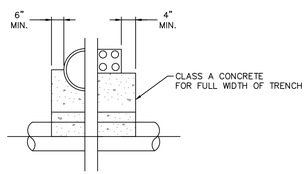

HALF SECTION

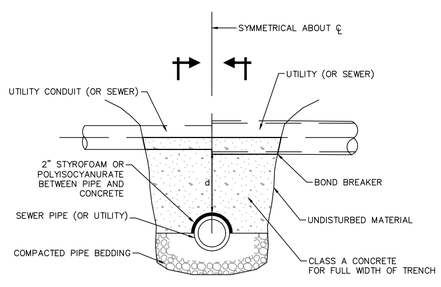

TYPE B (d < 12")

UTILITY SUPPORT NOTES

1. d=DISTANCE FROM TOP OF SEWER PIPE TO THE BOTTOM OF THE UTILITY PIPE
2. SUPPORTS TO BE LOCATED AS SHOWN ON THE DRAWINGS OR AS DIRECTED BY THE ENGINEER

TYPICAL SUPPORT FOR UTILITIES

SCALE: NOT TO SCALE

SANITARY SEWER PIPE TRENCH NOTES

1. DEPTH OF SEWER AND TYPE OF PIPE SHALL BE AS SHOWN ON DRAWINGS.
2. SEWER TRENCHES MAY BE EXCAVATED WIDER THAN TRENCH WIDTH W ABOVE THE "LINE OF NARROW TRENCH LIMIT." AT THE CONTRACTORS EXPENSE.
3. BELOW THE "LINE OF NARROW TRENCH LIMIT" THE TRENCH SHALL NOT BE EXCAVATED BEYOND THE TRENCH WIDTH W.
4. IF EXCAVATION AND BACKFILL BELOW NORMAL DEPTH IS REQUIRED, SHEETING MAY BE ORDERED.
5. SHEETING, IF USED, IN ALL CASES SHALL BE LEFT IN PLACE BELOW A LINE 1'-0" ABOVE THE TOP OF THE SEWER PIPE, UNLESS OTHERWISE INDICATED OR DIRECTED BY THE ENGINEER.
6. ALL ROCK WITHIN 3'-0" HORIZONTALLY OF THE ENDS OF BUILDING CONNECTIONS, BRANCHES AND STUBS, AND DOWN TO A HORIZONTAL PLANE 6" BELOW THE BOTTOMS OF SUCH ITEMS SHALL BE REMOVED.
7. TRENCH WIDTHS AND PAYMENT LIMIT SHALL BE AS FOLLOWS:

DIAMETER PIPE "I.D."	TRENCH WIDTH "W"	PAYMENT LIMIT
LESS THAN OR EQUAL TO 30"	2'-0" + PIPE I.D.	2'-0" + PIPE I.D.
GREATER THAN 30"	3'-0" + PIPE I.D.	3'-0" + PIPE I.D.

8. WHEN MULTIPLE PIPES ARE INSTALLED IN THE SAME TRENCH, THE TRENCH WIDTH "W" WILL BE BASED ON THE LARGER OF THE PIPES INSTALLED.
9. WHEN DIRECTED BY THE ENGINEER, REMOVE UNSUITABLE MATERIAL BELOW TYPICAL TRENCH SUBGRADE AND INCREASE THE DEPTH OF BEDDING WRAPPED IN GEOTEXTILE FABRIC. THIS WORK WILL BE PAID UNDER THE ITEM: AUTHORIZED ADDITIONAL EARTH EXCAVATION AND BEDDING.
10. WHERE CONCRETE ENCASEMENT IS CALLED FOR BY THE PLANS, OR WHEN DIRECTED BY THE ENGINEER, REPLACE BEDDING AND BACKFILL BELOW THE "LINE OF NARROW TRENCH LIMIT" WITH CLASS "A" CONCRETE.
11. SANITARY SEWER PIPE AND SERVICE CONNECTION PIPE SHALL HAVE GEOTEXTILE FABRIC AROUND THE PIPE BEDDING AS SHOWN ON THE DETAILS.

SANITARY SEWER PIPE TRENCH NOTES

SCALE: NOT TO SCALE

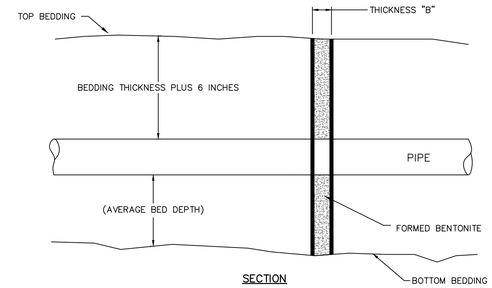

SECTION

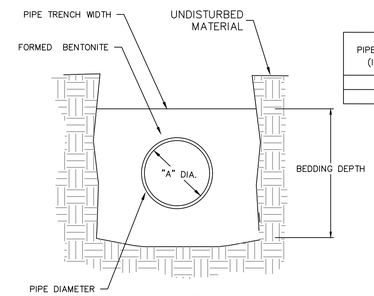

ELEVATION

PIPE DIA. (A) (INCHES)	BENTONITE THICKNESS (B) (INCHES)
6	12
8	16

BENTONITE TRENCH DAM

SCALE: NOT TO SCALE

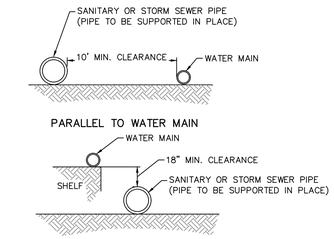

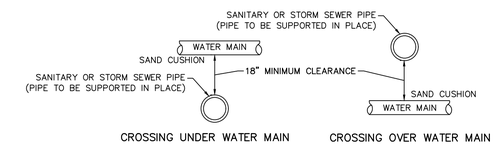

CROSSING UNDER WATER MAIN

1. IF THE SANITARY SEWER CROSSES LESS THAN 18" ABOVE OR UNDER THE WATER MAIN, THE SANITARY SEWER MUST BE ENCASED IN CONCRETE TO A DISTANCE OF 10 FEET (10') ON BOTH SIDES OF THE WATER MAIN OR BE APPROVED TIGHT JOINTED PIPE AS APPROVED

PARALLEL TO WATER MAIN

2. IF THE SANITARY SEWER IS WITHIN 10 HORIZONTAL FEET (10') OF THE WATER MAIN AND EITHER ABOVE THE WATER MAIN INVERT OR LESS THAN 18 INCHES (18") UNDER THE WATER MAIN, HTE SANITARY SEWER MUST BE ENCASED IN CONCRETE OR BE APPROVED TIGHT JOINTED PIPE AS APPROVED

WATER MAIN AND SEWER PIPE CROSSINGS

SCALE: NOT TO SCALE

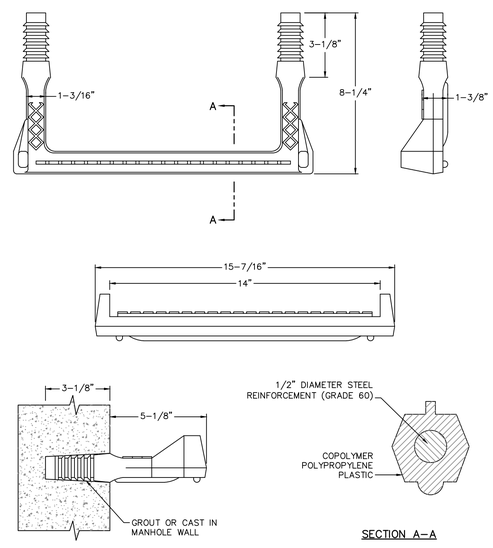

SECTION A–A

MANHOLE STEP DETAIL

SCALE: NOT TO SCALE

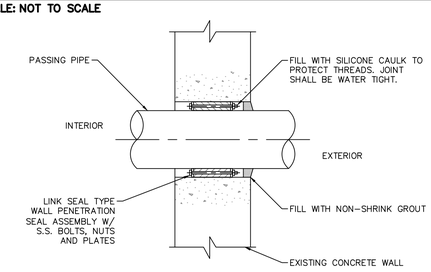

CORE DRILL & LINK SEAL DETAIL

SCALE: NOT TO SCALE

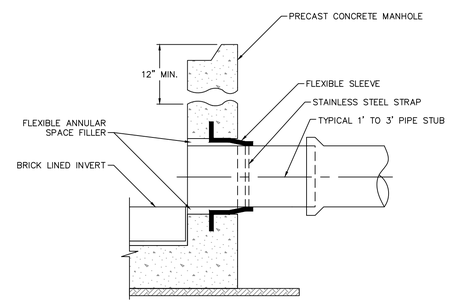

FLEXIBLE SLEEVE (PRECAST APPLICATION)

SCALE: NOT TO SCALE

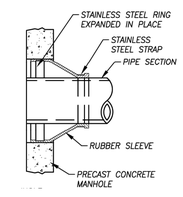

FLEXIBLE SLEEVE (CORED APPLICATION)

SCALE: NOT TO SCALE

No.	DATE	DESCRIPTION	DESIGNER	REVIEWER

STATE OF CONNECTICUT · DEAN E. AUDETT · No. 17623 · LICENSED PROFESSIONAL ENGINEER

SEAL

SCALE:
HORZ.: NOT TO SCALE
VERT.:
DATUM:
HORZ.:
VERT.:

FUSS & O'NEILL
146 HARTFORD ROAD
MANCHESTER, CONNECTICUT 06040
860.646.2469
www.fando.com

CITY OF MERIDEN

SANITARY SEWER DETAILS

BRIDGE REPLACEMENTS AND UTILITY IMPROVEMENTS
BUTLER STREET AND HANOVER STREET

MERIDEN CONNECTICUT

PROJ. No.: 20170932.C38
DATE: FEBRUARY 27, 2024

CD-105

File Path: J:\DWG\P2017\0932\C11\Civil\Plan\20170932C11_DET01.dwg, Layout: CD-105 (PHASE 1), Plotted: Tue, Feb 27, 2024 - 4:56 PM User: Shuffman
PC3: AUTOCAD PDF (GENERAL DOCUMENTATION).PC3 STB/CTB: FO.STB
LAYER STATE:
MS VIEW:

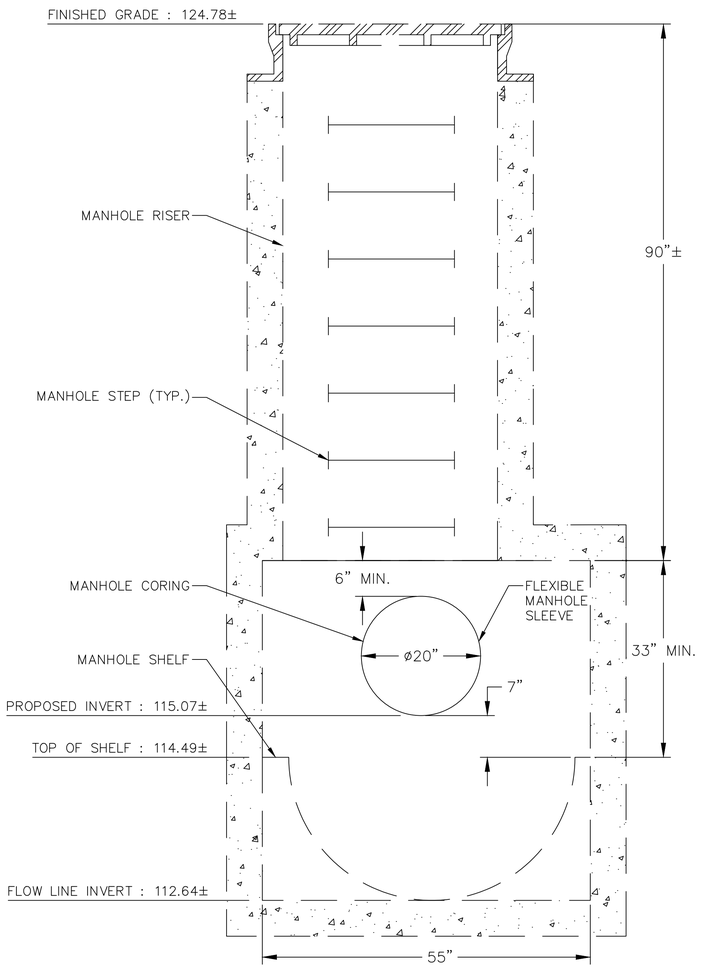

CHERRY STREET MANHOLE CORING

SCALE: NOT TO SCALE

No.	DATE	DESCRIPTION	DESIGNER	REVIEWER

SEAL

STATE OF CONNECTICUT DEAN E. AUDET No. 17683 LICENSED PROFESSIONAL ENGINEER

SCALE: HORZ.: NOT TO SCALE VERT.:

DATUM: HORZ.: VERT.:

FUSS & O'NEILL
146 HARTFORD ROAD
MANCHESTER, CONNECTICUT 06040
860.646.2469
www.fando.com

CITY OF MERIDEN

SANITARY SEWER DETAILS

BRIDGE REPLACEMENTS AND UTILITY IMPROVEMENTS
BUTLER STREET AND HANOVER STREET

MERIDEN CONNECTICUT

PROJ. No.: 20170932.38
DATE: FEBRUARY 27, 2024

CD-106

File Path: J:\DWG\P\20170932\C11\Civil\Plan\20170932C11_DET01.dwg, Layout: CD-106 (PHASE 1), Plotted: Tue, Feb 27, 2024 - 4:56 PM User: SHuffman
PC3: AUTOCAD PDF (GENERAL DOCUMENTATION).PC3 STB/CTB: FO.STB
LAYER STATE:
MS VIEW:

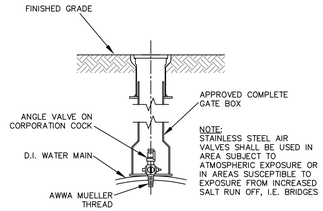

AIR VALVE

SCALE: NOT TO SCALE

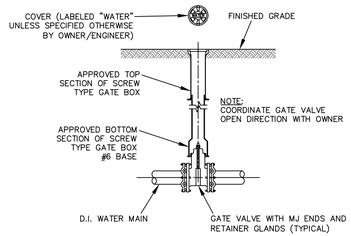

GATE VALVE

SCALE: NOT TO SCALE

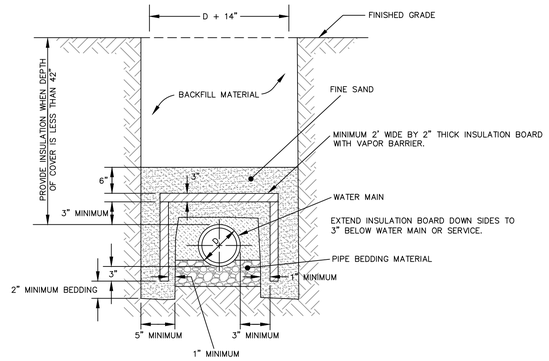

NOTES:

1. INSULATION BOARD TO BE FOAMGLAS OR APPROVED EQUAL MEETING ASTM C-552 WITH A COMPRESSIVE STRENGTH OF 90 PSI.
2. VAPOR BARRIER TO BE PITTCOTE 300 OR APPROVED EQUAL.
3. BACKFILL MATERIAL AROUND INSULATION MUST BE FINE SAND FREE FROM ROOTS, ORGANIC MATTER, OR OTHER INJURIOUS MATERIALS.
4. MAINTAIN 3" MINIMUM CLEARANCE FROM WATER MAIN ON ALL SIDES.
5. FOR REDUCTION IN COVER ONLY WHERE RESULTANT COVER IS LESS THAN 42".

WATER MAIN TRENCH INSULATION DETAIL

SCALE: NOT TO SCALE

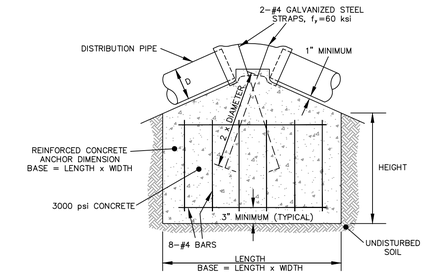

TYPICAL CONCRETE ANCHOR

SCALE: NOT TO SCALE

BEND		45°			22½°
PIPE DIAMETER (D) IN INCHES		12	8	6	12
VOLUME OF CONCRETE REQUIRED (CF)		157	74	43	81
TYPICAL DIMENSIONS IN FEET	LENGTH	6.33	5	4	5.25
	WIDTH	6.33	5	4	5.25
	HEIGHT	4	3	3	3

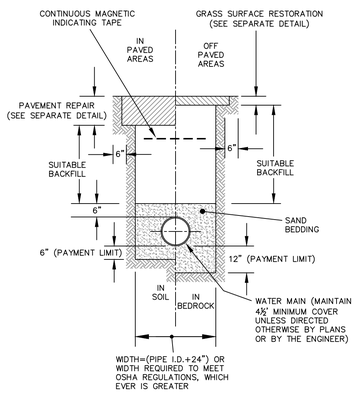

WATER MAIN TRENCH

SCALE: NOT TO SCALE

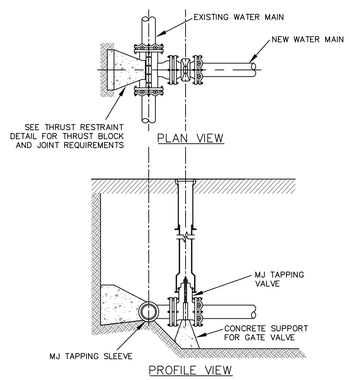

MUELLER H-615 TAPPING SLEEVE & VALVE (NO AVK TAPPING VALVES)

SCALE: NOT TO SCALE

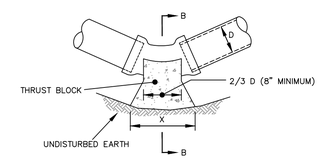

PLAN

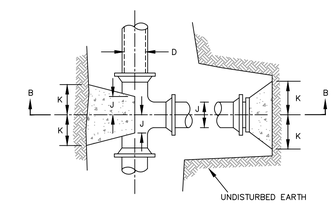

PLAN

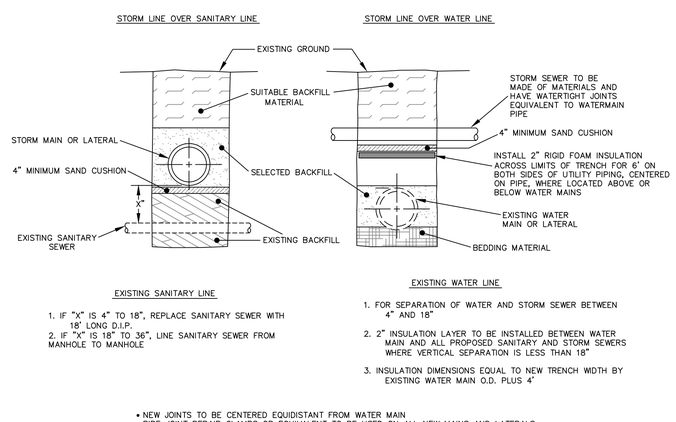

STORM LINE CONFLICTS

SCALE: NOT TO SCALE

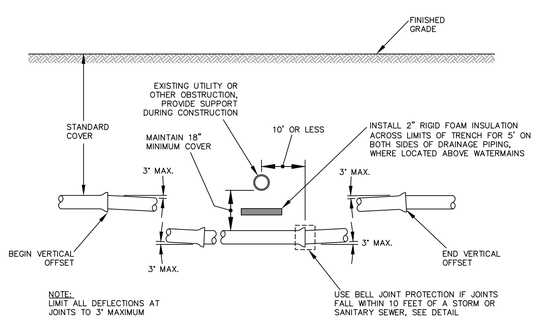

GRADUAL VERTICAL OFFSET

SCALE: NOT TO SCALE

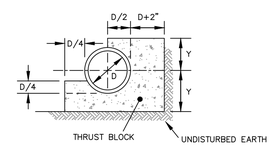

SECTION A-A

1. ALL CONCRETE SHALL BE 3000 psi @ 28 DAYS.
2. DIMENSIONS SHOWN ARE MINIMUM AND ARE BASED UPON SOIL PRESSURE OF 2000 psf AND STATIC WATER PRESSURE OF 200 psi.
3. THRUST BLOCKS SHALL BEAR AGAINST UNDISTURBED EARTH.

TABLE OF DIMENSIONS																					
DIMENSION	90° BEND					45° BEND					22½° BEND					11¼° BEND					
D (in)	6	8	10	12	16	6	8	10	12	16	6	8	10	12	16	6	8	10	12	16
X (in)	26	37	42	54	70	18	26	34	38	51	21	19	24	28	38	9	14	16	20	28
Y (in)	15	18	24	26	35	12	14	16	20	26	10	10	12	14	18	6	7	9	10	12

WATER MAIN BEND CONCRETE THRUST BLOCK DETAIL

SCALE: NOT TO SCALE

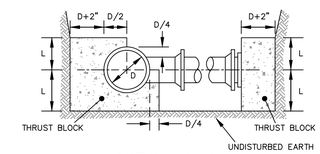

SECTION B-B

1. ALL CONCRETE SHALL BE 3000 psi @ 28 DAYS.
2. DIMENSIONS SHOWN ARE MINIMUM AND ARE BASED UPON SOIL PRESSURE OF 2000 psf AND STATIC WATER PRESSURE OF 200 psi.
3. THRUST BLOCKS SHALL BEAR AGAINST UNDISTURBED EARTH.

TABLE OF DIMENSIONS					
B (in)	6	8	10	12	16
J (in)	6	7	9	10	12
K (in)	12	15	20	24	30
L (in)	12	16	18	22	30

WATER MAIN TEE / PLUG CONCRETE THRUST BLOCK

SCALE: NOT TO SCALE

No.	DATE	DESCRIPTION	DESIGNER	REVIEWER

STATE OF CONNECTICUT · DEAN E. AUDET · No. 17631 · LICENSED PROFESSIONAL ENGINEER

SEAL

SCALE: HORZ.: NOT TO SCALE; VERT.:
DATUM: HORZ.: ; VERT.:

FUSS & O'NEILL
146 HARTFORD ROAD
MANCHESTER, CONNECTICUT 06040
860.646.2469
www.fando.com

CITY OF MERIDEN

WATER DETAILS

BRIDGE REPLACEMENTS AND UTILITY IMPROVEMENTS
BUTLER STREET AND HANOVER STREET

MERIDEN CONNECTICUT

PROJ. No.: 20170932.C38
DATE: FEBRUARY 27, 2024

CD-107

File Path: J:\DWG\P\20170932\C11\Civil\Plan\20170932C11_DET01.dwg, Layout: CD-107(PHASE 1), Plotted: Tue, Feb 27, 2024 - 4:56 PM User: SHuffman
PC3: AUTOCAD PDF (GENERAL DOCUMENTATION).PC3 STB/CTB: FO.STB
LAYER STATE:
MS VIEW:

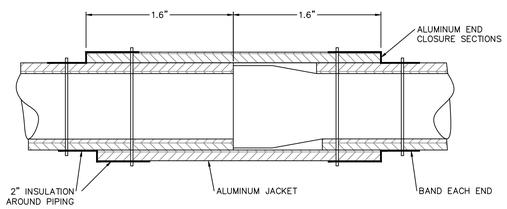

INSULATION AT JOINTS DETAIL

SCALE: NOT TO SCALE

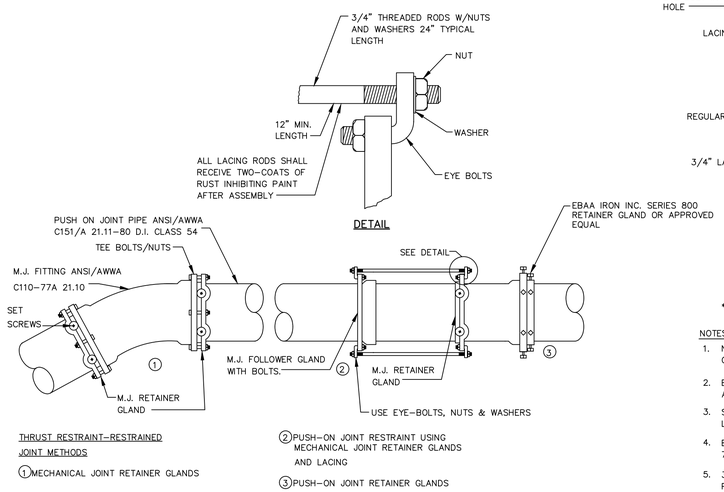

THRUST RESTRAINT – LACING METHOD

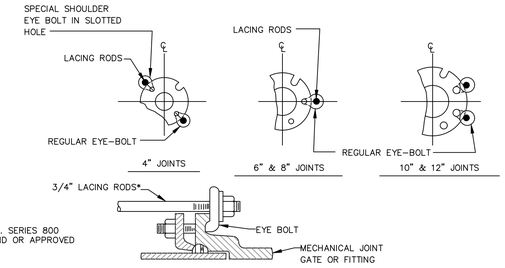

PIPE SIZE	No. LACING RODS
4",6" & 8"	2 – 3/4"ø
10" & 12"	4 – 3/4"ø

* STANDARD LENGTHS ARE 6' & 10'. COUPLINGS MAY BE USED FOR LONGER LENGTHS.

NOTES:

1. NUMBER OF LACING RODS IS BASED ON MAXIMUM PRESSURE OF 150 P.S.I. IN MAIN.
2. EYE-BOLTS AND LACING RODS ARE TO BE FABRICATED FROM A-36 STEEL.
3. STEEL LACING RODS SHALL HAVE A YIELD STRESS OF NOT LESS THAN 36,000 P.S.I.
4. EYE-BOLTS SHALL HAVE A MINIMUM TENSILE STRENGTH OF 7,000 LBS. EACH.
5. 3/4" LACING RODS AND EYEBOLTS ARE UNSUITABLE FOR PIPELINES 16 INCHES IN DIAMETER AND LARGER. RESTRAINT FOR 16 INCHES AND LARGER PIPES MUST BE DESIGNED ON A CASE-BY-CASE BASIS AND APPROVED BY THE UTILITY.

MECHANICAL JOINT LACING DETAIL

TYPICAL RESTRAINED JOINTS

SCALE: NOT TO SCALE

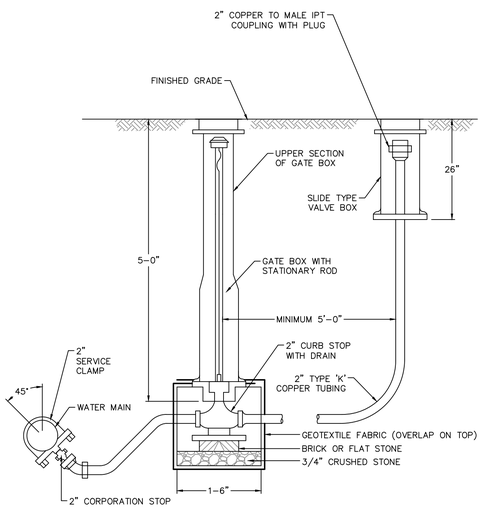

2" BLOWOFF

SCALE: NOT TO SCALE

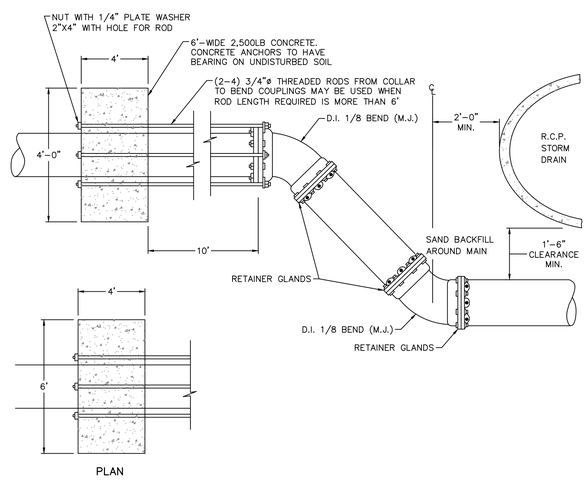

TYPICAL OFFSET

SCALE: NOT TO SCALE

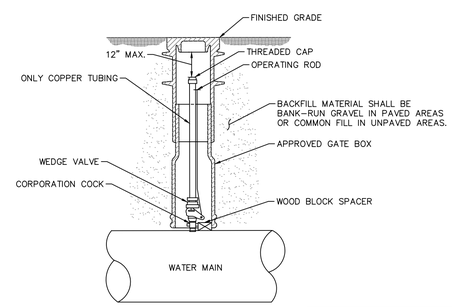

MAIN SIZE	CORPORATION COCK	WEDGE VALVE
6" – 12"	¾" X 1"	1"
16" – 42"	1 – ½" X 2"	2"

NOTES;

1. CANNOT BE USED FOR FUTURE SERVICE.
2. A CHLORINATION/SAMPLING ASSEMBLY SHALL BE REMOVED ONCE WATER MAIN PASSES SAMPLING. CORPORATION SHALL EITHER BE CONVERTED TO AIR RELEASE OR ABANDONED PRIOR TO FINAL PAVEMENT RESTORATION.

CHLORINATION INLET / BLOW-OFF

SCALE: NOT TO SCALE

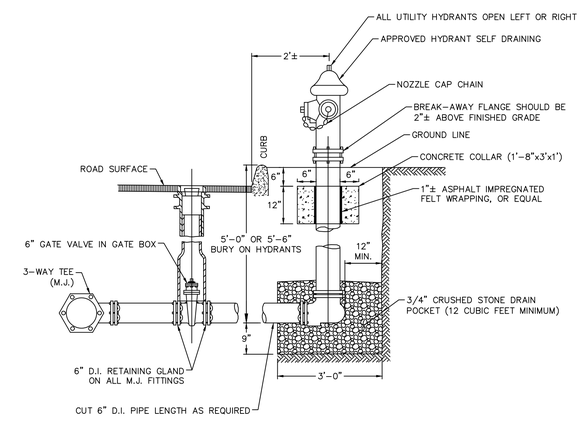

FIRE HYDRANT ASSEMBLY TYPICAL RETAINING GLAND INSTALLATION

SCALE: NOT TO SCALE

No.	DATE	DESCRIPTION	DESIGNER	REVIEWER

STATE OF CONNECTICUT · DEAN E. AUGUST · No. 17623 · LICENSED PROFESSIONAL ENGINEER

SEAL

SCALE: HORZ.: NOT TO SCALE; VERT.:
DATUM: HORZ.: ; VERT.:

FUSS & O'NEILL
146 HARTFORD ROAD
MANCHESTER, CONNECTICUT 06040
860.646.2469
www.fando.com

CITY OF MERIDEN

WATER DETAILS

BRIDGE REPLACEMENTS AND UTILITY IMPROVEMENTS
BUTLER STREET AND HANOVER STREET

MERIDEN CONNECTICUT

PROJ. No.: 20170932.C38
DATE: FEBRUARY 27, 2024

CD-108

File Path: J:\DWG\P2017\0932\C11\Civil\Plan\20170932C11_DET01.dwg, Layout: CD-108 (PHASE 1), Plotted: Tue, Feb 27, 2024 - 4:56 PM User: SHuffman
PC3: AUTOCAD PDF (GENERAL DOCUMENTATION).PC3 STB/CTB: FO.STB
LAYER STATE:
MS VIEW:

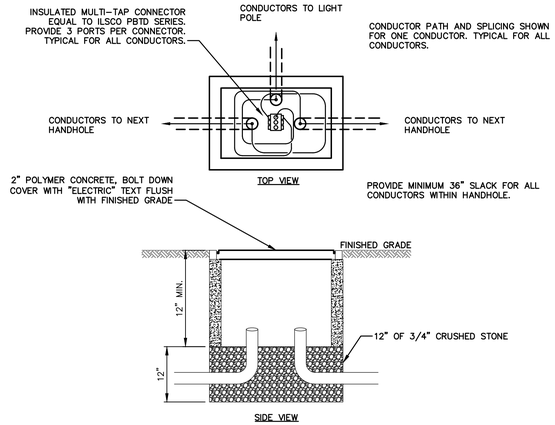

NOTES:

1. HANDHOLE SHALL BE MODEL H1118-12 FROM CARSON OR APPROVED EQUAL WITH H-20 LOAD RATING.

HANDHOLE SPLICING DETAIL

SCALE: NOT TO SCALE

NOTES

1. "SITE LIGHTING" ENGRAVED IN COVER
2. PROVIDE IN-GROUND HANDHOLE BOX:
   - HIGH DENSITY REINFORCED CONCRETE
   - H-20 RATING
   - STEEL CHECKER COVER, BOLT DOWN

EQUAL TO OLDCASTLE PRECAST MODEL B1730

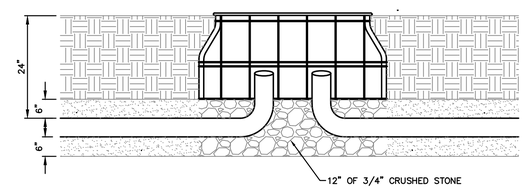

HANDHOLE DETAIL

SCALE: NOT TO SCALE

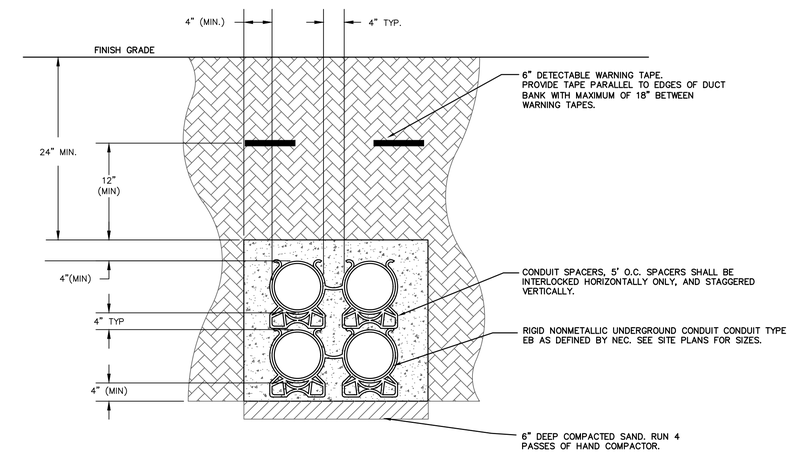

NOTES

1. BOTTOM ROW OF DUCT BANK SHALL SIT ON PREPARED SURFACE.
2. DUCT BANK SHALL BE ENCASED IN CONCRETE WITH AT LEAST 4" OF CONCRETE AT THE TOP AND SIDES. WHERE DIFFERENT DUCTBANK SYSTEMS ARE ADJACENT TO EACH OTHER, THERE SHALL BE 8" OF CONCRETE BETWEEN CONDUITS.
3. THE CONCRETE SHALL INCLUDE 3/4" AGGREGATE WITH A NOMINAL COMPRESSIVE STRENGTH OF 3,000 LBS. PER SQ. INCH. THE SLUMP SHALL BE AT THE UPPER END OF THE RANGE, 5 – 6" INCHES. SLUMP SHALL BE JUST ENOUGH TO FLOW TO THE BOTTOM OF THE DUCT BANK YET NOT BE SO WET AS TO CAUSE THE CONDUITS TO FLOAT EXCESSIVELY.
4. ADJUST THE CONCRETE DELIVERY CHUTE SO THE FALL INTO THE FORM IS MINIMAL. POUR THE CONCRETE SLOWLY AND DISTRIBUTE IT EVENLY SO AS NOT TO DISLODGE THE SPACERS.
5. CONTRACTOR SHALL ENSURE THAT THE HEIGHT OF POUR SHALL NOT CRUSH BOTTOM CONDUITS. COORDINATE WITH MANUFACTURER'S REQUIREMENTS.
6. PROVIDE FORMS FOR CONCRETE POUR. DO NOT USE THE SIDES OF THE TRENCH.
7. BACK FILL TRENCH AFTER CONCRETE HAS SET, PER SPECIFICATION, AND INSPECTION MADE BY ENGINEER.
8. CONCRETE CONSTRUCTION JOINTS SHALL NOT BE SPACED LESS THAN 40' O.C.
9. SLOPE CONDUITS BETWEEN MANHOLES SO THAT WATER WILL DRAIN TO THE MANHOLE.
10. PROVIDE 1/4" NYLON PULL CHORDS IN ALL CONDUITS.
11. SEE SITE PLANS FOR SPECIFIC CROSS SECTIONS OF DUCT BANKS.

CONCRETE DUCTBANK CONSTRUCTION DETAIL

SCALE: NOT TO SCALE

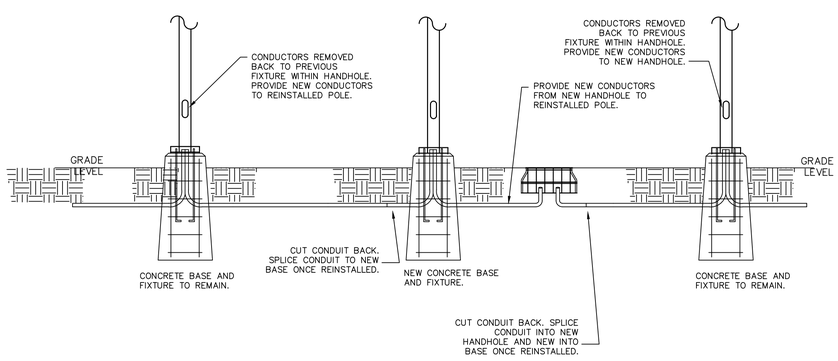

LIGHT POLE CHANGE SPLICING

SCALE: NOT TO SCALE

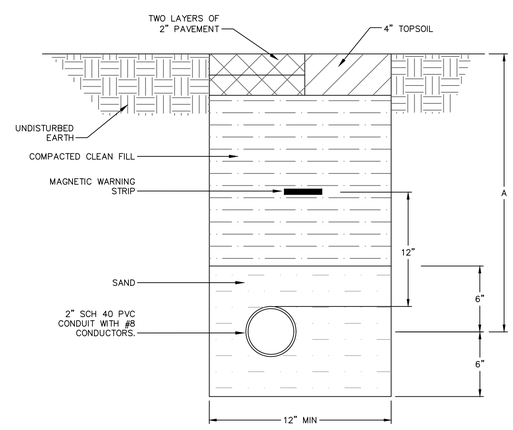

CONDUIT DEPTHS	
SERVICE	DIM "A"
SITE LIGHTING	24"

NOTE:
WHEN MULTIPLE CONDUITS ARE BURIED TOGETHER THERE SHALL BE A MINIMUM OF 2" CLEARANCE BETWEEN CONDUITS.

BURIED CONDUIT DETAIL SITE LIGHTING

SCALE: NOT TO SCALE

No.	DATE	DESCRIPTION	DESIGNER	REVIEWER

STATE OF CONNECTICUT · DEAN E. AUDDY · No. 17623 · LICENSED PROFESSIONAL ENGINEER

SEAL

SCALE:
HORZ.: NOT TO SCALE
VERT.:
DATUM:
HORZ.:
VERT.:

FUSS & O'NEILL
146 HARTFORD ROAD
MANCHESTER, CONNECTICUT 06040
860.646.2469
www.fando.com

CITY OF MERIDEN

ELECTRICAL DETAILS

BRIDGE REPLACEMENTS AND UTILITY IMPROVEMENTS
BUTLER STREET AND HANOVER STREET
MERIDEN CONNECTICUT

PROJ. No.: 20170932.C38
DATE: FEBRUARY 27, 2024

CD-109

File Path: J:\DWG\P\20170932\C11\Civil\Plan\20170932C11_DET01.dwg, Layout: CD-109(PHASE 1), Plotted: Tue, Feb 27, 2024 - 4:56 PM User: SHuffman
PC3: AUTOCAD PDF (GENERAL DOCUMENTATION).PC3 STB/CTB: FO.STB
LAYER STATE:
MS VIEW:

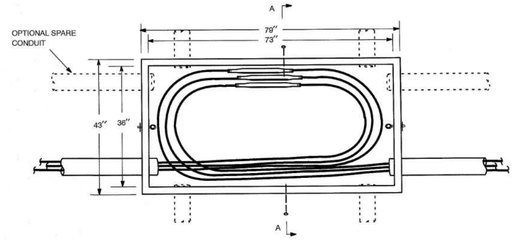

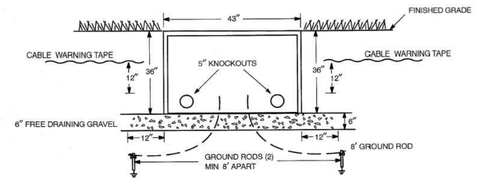

SECTION A–A

Notes

1. Install polymer concrete vault. Vault is rated for occasional vehicular traffic, however, do not install in roadway applications. Vault shall be used to splice one three–phase cable, maximum #4/0 Al.
2. The excavation shall be carried to a minimum depth of 6" below the bottom and 12" beyond the edge.
3. Install two 8' galvanized steel ground rods adjacent to the vault and ground per **DTR 78.151**. Provide #6 Cu bond for communications companies.
4. Select splices from **DTR 33.501–502**.
5. Install warning tape 12" above top of conduit.
6. Install schedule 40 PVC conduit, minimum 4" diameter. Install conduit plugs in spare conduits.

ORIGINAL 9/22/06	VAULT – POLYMER CONCRETE – FOR SPLICING THREE–PHASE PRIMARY – DIRECT–BURIED CONDUIT SYSTEM		CT/MA
APPROVED 3/22/06	NORTHEAST UTILITIES	CONSTRUCTION STANDARD	DTR 51.601

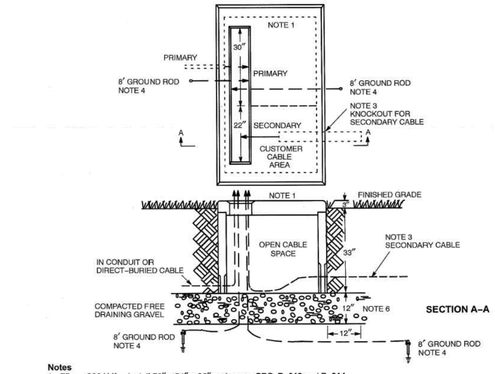

SECTION A–A

Notes

1. 75 – 300 kVA – Install 78" x 54" x 36" pad as per **SPC P–013** and **P–014**.
   500 – 2500 kVA – Install 76" x 70" x 36" pad as per **SPC P–015** and **P–016**.
2. **Primary Cable**
   a. Install direct–buried cables a minimum of 30 inches below grade.
   b. Install cables in conduit a minimum of 24 inches below grade.
   c. Loop cables in cable pit before making connections.
3. **Secondary Cable** – Leave enough cable to extend 6 feet above pad for future reconnecting to transformers with higher secondary terminals. Customer cable(s) shall enter through the rear knockout and shall be confined to the area defined as the "customer cable area."
4. **Galvanized Steel Ground Rods** – Install in trench and connect #2 copper conductors from rods through pad opening and extending 5 feet above pad. Minimum separation of ground rods is 8 feet.
5. The following DTR/DSEM's should also be used:
   a. **DTR 17.083 – THREE–PHASE TRANSFORMER CONNECTIONS**
   b. **DTR 33.217 – 600-VOLT CONNECTOR GUIDE - FOR NEMA PADS - THREE-PHASE PAD-MOUNT TRANSFORMERS**
   c. **DTR 42.061 – LOCATION AND MECHANICAL PROTECTION REQUIREMENTS**
   d. **DTR 44.221 – FAULT INDICATOR GUIDE – SOLID DIELECTRIC CABLES**
   e. **DTR 56.509 – PRIMARY – SECONDARY AND TRANSFORMER GROUNDING**
   f. **DSEM Section 14.21 – LOADING LIMITS – THREE–PHASE TRANSFORMERS**
   g. **DSEM Section 07.30 – CONVENTIONAL UG LOOPS**
   h. **DTR 56.221 – JACKETED PRIMARY CABLE – GROUNDING**
6. The excavation for the pad shall be carried to a depth of 12 inches below the bottom of the pad. The bottom layer of backfill shall be compacted, clean gravel, free of foreign matter and construction debris, extending 12 inches beyond the circumference of the structure, and in accordance with Connecticut DOT Spec M.02.06 Grading "A"; or Massachusetts DPW Spec M1.03.0 Type b. The remaining backfill shall not contain ashes, cinders, shells, frozen material, loose debris, or stones larger than 2 inches in maximum dimension. It shall be placed in 6–inch layers and compacted with mechanical tampers to not less than 95 percent of the maximum dry density as determined by the standard compaction tests, AASHTO T180 or ASTM D698.

ORIGINAL 9/28/87	INSTALLATION OF CONCRETE PAD FOR THREE–PHASE PAD–MOUNTED TRANSFORMERS 75–2500 KVA – DIRECT–BURIED		
APPROVED 9/30/04	NORTHEAST UTILITIES	CONSTRUCTION STANDARD	DTR 58.301 | 8

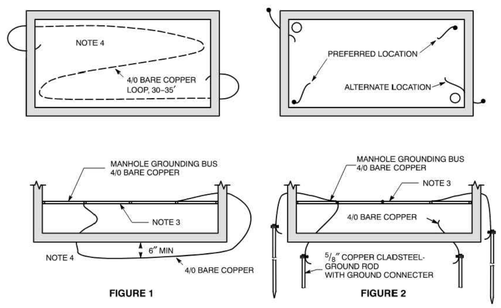

FIGURE 1 **FIGURE 2**

FIGURE 1 – Use when bottom of manhole or vault will be below permanent water level.

a. Install 4/0 bare copper wire, 30 to 35 feet long, a minimum of six inches below floor.

b. In areas with a high water table, the 4/0 ground wire should be sealed. This is done by adding a compression sleeve with an oil stop **Item #504601** and placing the sleeve in the concrete or joint grout.

FIGURE 2 – Use when bottom of manhole or vault is above permanent water level or in rocky soil.

a. Install two 5/8" x 8' copper clad steel ground rods below floor (preferred) or adjacent to walls (alternate).

b. Drive ground rods sideways, if necessary, in rocky soil.

Notes

1. Install all loop wires or grounds to 25 ohms or less.
2. Connect grounds to 4/0 copper bus in manhole or vault.
3. Install manhole grounding bus with 4–4/0, 4–way compression branch connectors, **Item #516739**.
4. For poured in place manholes, or overcast, grounding tail can be brought into the manhole through the floor. For all other manholes, bring two (2) tails through duct opening.

ORIGINAL 11/28/94	CONDUIT SYSTEM – GROUNDING BELOW GRADE MANHOLES AND VAULTS		
APPROVED 5/7/12	EVERSOURCE ENERGY	CONSTRUCTION STANDARD	DTR 76.451 | 7

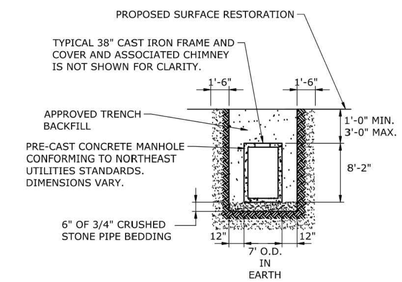

ELECTRIC MANHOLE INSTALLATION NOTES:

1. THE FIRST 12" OF FILL SHALL BE SAND PIPE BEDDING TAMPED USING LIGHTWEIGHT EQUIPMENT SUCH AS PNEUMATIC OR VIBRATING TAMPERS. BACKFILL SHALL BE FREE FROM LARGE STONES, FROZEN MATERIAL, WOOD, AND OTHER EXTRANEOUS MATERIALS.

2. APPROVED TRENCH BACKFILL SHALL BE USED ABOVE SAND PIPE BEDDING TO BOTTOM OF PROPOSED SURFACE RESTORATION.

3. IN ROCK EXCAVATION, PROVIDE 6" SAND PIPE BEDDING CUSHION AROUND STRUCTURES.

4. CONTRACTOR SHALL PLACE MARKING TAPE 18" ABOVE DUCT STRUCTURE. MARKING TAPE SHALL BE APPROVED BY NORTHEAST UTILITIES.

5. THE 1'-6" CUT BACK OF CONCRETE AND PAVEMENT (IF REQUIRED) SHALL BE MADE AT THE TIME OF FINAL RESTORATION.

INSTALLATION OF PRECAST UTILITY MANHOLE
N.T.S.

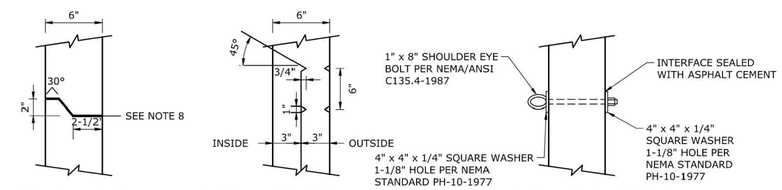

JOINT DETAIL N.T.S.

WINDOW KNOCKOUT DETAIL N.T.S.

PULLING EYEBOLT DETAIL N.T.S.

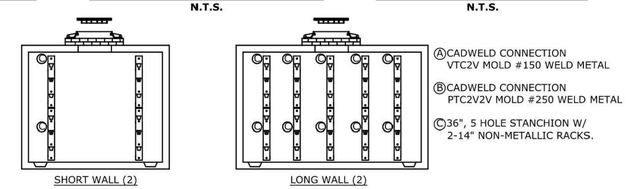

PRIMARY ELECTRIC STANCHION INSTALLATION
N.T.S.

NOTE:
DETAILS SHOWN ON THIS SHEET ARE FOR BASIS OF DESIGN. DETAILS MAY BE MODIFIED OR ADDED PER COORDINATION WITH UTILITY COMPANY.

No.	DATE	DESCRIPTION	DESIGNER	REVIEWER

STATE OF CONNECTICUT · DEAN E. AUDET · No. 17613 · LICENSED PROFESSIONAL ENGINEER

SEAL

SCALE: HORZ.: NOT TO SCALE; VERT.:
DATUM: HORZ.: ; VERT.:

FUSS & O'NEILL
146 HARTFORD ROAD
MANCHESTER, CONNECTICUT 06040
860.646.2469
www.fando.com

CITY OF MERIDEN

ELECTRICAL DETAILS

BRIDGE REPLACEMENTS AND UTILITY IMPROVEMENTS
BUTLER STREET AND HANOVER STREET
MERIDEN CONNECTICUT

PROJ. No.: 20170932.C38
DATE: FEBRUARY 27, 2024

CD-110

File Path: J:\DWG\P20170932\C11\Civil\Plan\20170932C11_DET01.dwg, Layout: CD-110 (PHASE 1), Plotted: Tue, Feb 27, 2024 - 4:56 PM User: SHuffman
PC3: AUTOCAD PDF (GENERAL DOCUMENTATION).PC3 STB/CTB: FO.STB
LAYER STATE:
MS VIEW:

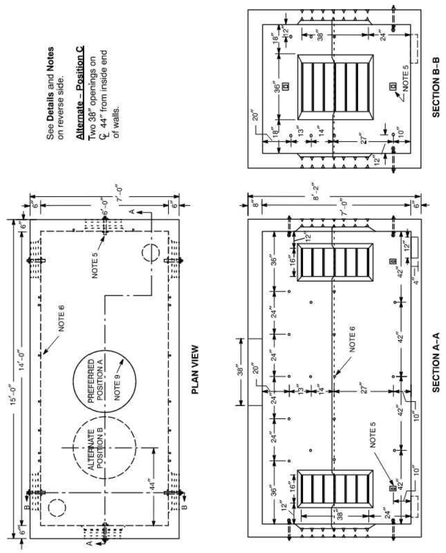

ORIGINAL 8/23/73	MANHOLE – PRECAST REINFORCED CONCRETE 6'–0" x 14'–0" x 7'–0" INSIDE		
APPROVED 11/1/01	EVERSOURCE ENERGY	MATERIAL SPECIFICATION	SPC M–031	11

PREFERRED:

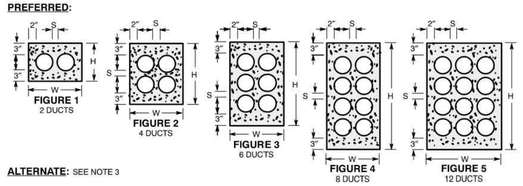

ALTERNATE: SEE NOTE 3

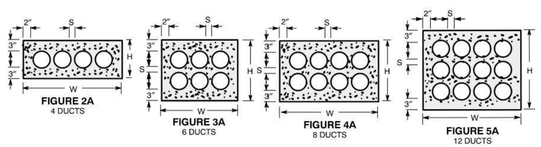

	Dimensions In Inches								
	4" Duct			5" Duct			6" Duct		
Fig	W	H	S	W	H	S	W	H	S
1	14–1/2	10–1/2	1–1/2	16–1/2	11–1/2	1–1/2	19	12–1/2	2
2	14–1/2	16–1/2	1–1/2	16–1/2	18–1/2	1–1/2	19	21	2
2A	26–1/2	10–1/2	1–1/2	30–1/2	11–1/2	1–1/2	36	12–1/2	2
3	14–1/2	22–1/2	1–1/2	16–1/2	25–1/2	1–1/2	19	29–1/2	2
3A	20–1/2	16–1/2	1–1/2	23–1/2	18–1/2	1–1/2	27–1/2	21	2
4	14–1/2	28–1/2	1–1/2	16–1/2	32–1/2	1–1/2	19	38	2
4A	26–1/2	16–1/2	1–1/2	30–1/2	18–1/2	1–1/2	36	21	2
5	20–1/2	28–1/2	1–1/2	23–1/2	32–1/2	1–1/2	27–1/2	38	2
5A	26–1/2	22–1/2	1–1/2	30–1/2	25–1/2	1–1/2	36	29–1/2	2

Notes

1. At manholes conduit banks shall be per Figures 1, 2, 3, 4, or 5.
2. Minimum cover from top of a conduit bank to the pavement or earth surface shall be:
   a. State highways – 36 inches
   b. Railroad tracks – 60 inches
   c. All other areas – 24 inches
3. In the conduit run between manholes if obstructions are encountered or to reduce trench depth, Figures 2A, 3A, 4A, or 5A are permissible.
4. Concrete shall be 2500 psi, 1/2 inch maximum stone, 6–9 inches slump of such consistency that spading will ensure the flow of concrete between and under the individual ducts, but not so wet as to float the ducts. For tier buildup construction a stiffer consistency should be used.

ORIGINAL 5/29/75	CONDUIT BANK CONSTRUCTION		
APPROVED 11/2/99	EVERSOURCE ENERGY	DESIGN & APPLICATION STANDARD	DTR 73.209	5

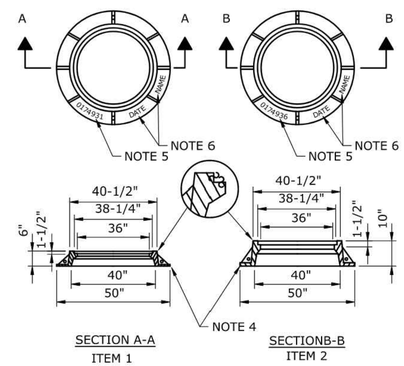

NOTES:

1. THE GRAY CAST IRON SHALL CONFORM TO THE LATEST EDITION OF ASTM A48 CLASS 30B CASTINGS.

2. DESIGN LOADING SHALL BE IN ACCORDANCE WITH THE LATEST EDITION OF AASHTO HS20.

3. BEARING AND SIDE SURFACE OF FRAMES FOR COVER SEAT SHALL BE MACHINE FINISHED WITH TOLERANCES OF +1/16 INCH - 0 INCHES.

4. FOUR LIFTING HOLES (ALTERNATE RIBS). 1-1/4 INCH DIAMETER WITH CENTER 1-1/4 INCH BASE AND SIDE OF FRAME.

5. NU SC 0174936 SHALL BE CAST IN THE FLANGE.

6. FOUNDRY NAME OR INSIGNE AND DATE (YEAR) SHALL BE CAST IN THE FLANGE ADJACENT TO NORTHEAST UTILITIES STOCK CODE.

7. THE 36 INCH - FRAME REQUIRES A 38 INCH COVER.

8. WEIGHT OF 36 INCH FRAME IS APPROXIMATELY 550 POUNDS.

FRAME MANHOLE CAST IRON
36" CLEAR INSIDE DIAMETER 6" AND 10" RISE
N.T.S.

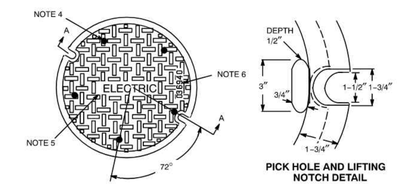

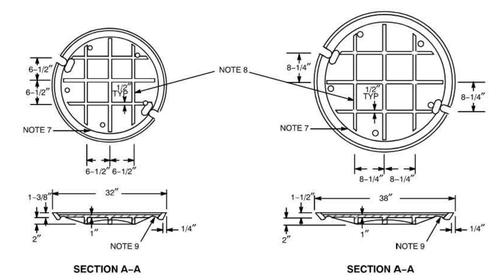

Notes

1. The gray cast iron shall conform to ASTM A48–1983 Class 30–B.
2. Design loading shall be in accordance with AASHTO HS20–1983.
3. Bearing surfaces of cover shall be machine finished with tolerance of 1/16 inch +0 inches.
4. Five 1–1/4–inch diameter holes, 5 inches from edge and 72 degrees apart.
5. "ELECTRIC" letters 2–1/2 inches high.
6. NU stock code shall be cast in cover between pick holes, 32 inch **Item #543422**, 38 inch **Item #543423**.
7. Foundry name or insignia and date (year when manufactured) shall be cast in the underside of cover.
8. Ribs to be tapered from 1/2 inch to 3/4 inch.
9. Lifting notch adjacent to each pick hole.
10. The 32–inch cover fits into the 30–inch frame. The 38–inch cover fits into the 36–inch frame. Weight of 32–inch cover approximately 265 pounds and 38–inch cover approximately 365 pounds.

ORIGINAL 7/8/75	COVERS – MANHOLE – CAST IRON 32" AND 38" DIAMETER		
APPROVED 3/1/97	EVERSOURCE ENERGY	MATERIAL SPECIFICATION	SPC C–709	8

NOTE:
DETAILS SHOWN ON THIS SHEET ARE FOR BASIS OF DESIGN. DETAILS MAY BE MODIFIED OR ADDED PER COORDINATION WITH UTILITY COMPANY.

No.	DATE	DESCRIPTION	DESIGNER	REVIEWER

STATE OF CONNECTICUT DEAN E. AUDER No. 17623 LICENSED PROFESSIONAL ENGINEER

SEAL

SCALE: HORZ.: NOT TO SCALE VERT.:
DATUM: HORZ.: VERT.:

FUSS & O'NEILL
146 HARTFORD ROAD
MANCHESTER, CONNECTICUT 06040
860.646.2469
www.fando.com

CITY OF MERIDEN

ELECTRICAL DETAILS

BRIDGE REPLACEMENTS AND UTILITY IMPROVEMENTS
BUTLER STREET AND HANOVER STREET
MERIDEN CONNECTICUT

PROJ. No.: 20170932.C38
DATE: FEBRUARY 27, 2024

CD-111

File Path: J:\DW\GIP2017\0932\C11\Civil\Plan\20170932C11_DET01.dwg, Layout: CD-111 (PHASE 1), Plotted: Tue, Feb 27, 2024 - 4:56 PM User: SHuffman
PC3: AUTOCAD PDF (GENERAL DOCUMENTATION).PC3 STB/CTB: FO.STB
LAYER STATE:
MS VIEW:

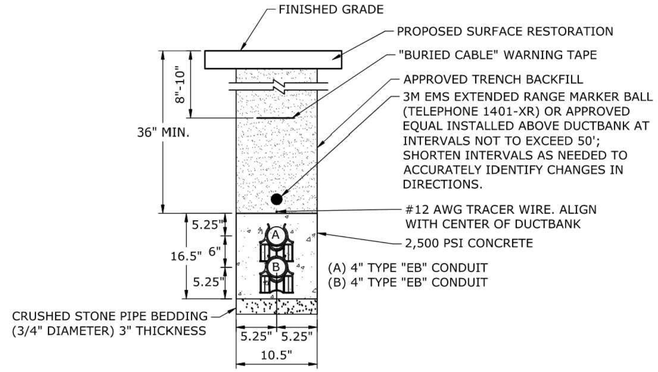

NOTE:

1. THE DUCTBANK SHALL BE REINFORCED AT ALL ROADWAY AND DRIVEWAY CROSSINGS. THE CONTRACTOR SHALL PROVIDE ENGINEERED SHOP DRAWINGS OF REINFORCED DUCTBANK.

TELECOMMUNICATIONS CONDUIT DUCTBANK (1X2)

N.T.S.

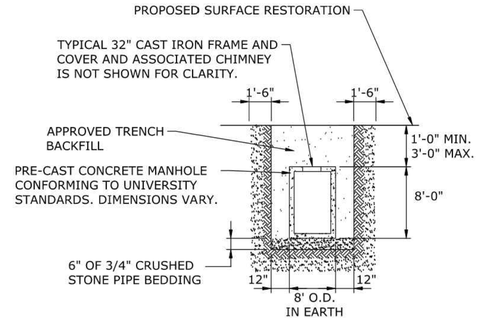

TELECOMMUNICATIONS MANHOLE INSTALLATION NOTES:

1. THE FIRST 12" OF FILL SHALL BE SAND PIPE BEDDING TAMPED USING LIGHTWEIGHT EQUIPMENT SUCH AS PNEUMATIC OR VIBRATING TAMPERS. BACKFILL SHALL BE FREE FROM LARGE STONES, FROZEN MATERIAL, WOOD, AND OTHER EXTRANEOUS MATERIALS.
2. APPROVED TRENCH BACKFILL SHALL BE USED ABOVE SAND PIPE BEDDING TO BOTTOM OF PROPOSED SURFACE RESTORATION.
3. IN ROCK EXCAVATION, PROVIDE 6" SAND PIPE BEDDING CUSHION AROUND STRUCTURES.
4. CONTRACTOR SHALL PLACE MARKING TAPE 18" ABOVE DUCT STRUCTURE. MARKING TAPE SHALL BE APPROVED BY UNIVERSITY.
5. THE 1'-6" CUT BACK OF CONCRETE AND PAVEMENT (IF REQUIRED) SHALL BE MADE AT THE TIME OF FINAL RESTORATION.

INSTALLATION OF PRECAST UTILITY MANHOLE

N.T.S.

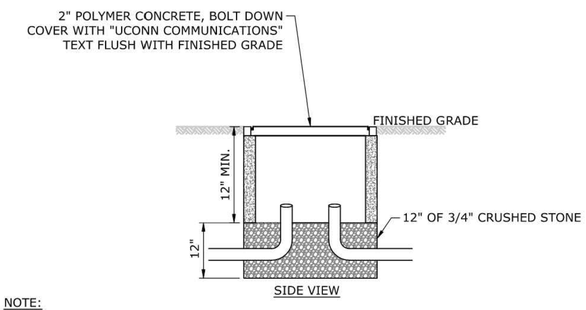

NOTE:

1. HANDHOLE SHALL BE MODEL H1118-12 FROM CARSON OR APPROVED EQUAL.

TELECOM CONCRETE HANDHOLE (SPECIAL)

N.T.S.

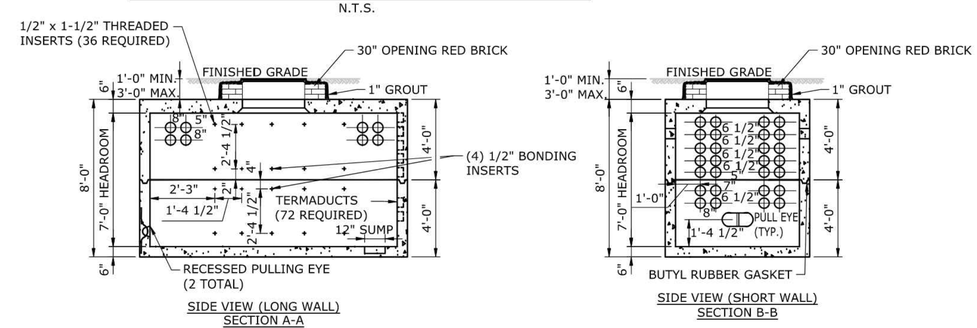

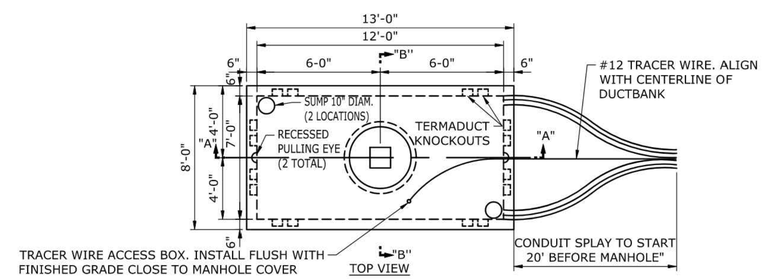

PRECAST REINFORCED CONCRETE TELECOM VAULT (6'x12'x7' INSIDE)

N.T.S.

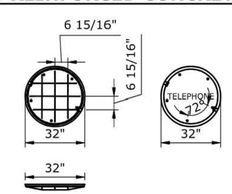

TELECOMMUNICATIONS MANHOLE FRAME AND COVER NOTES:

1. THE GRAY CAST IRON SHALL CONFORM TO ASTM A48 CLASS 30-B
2. DESIGN LOADING SHALL BE IN ACCORDANCE WITH AASHTO HS20
3. BEARING SURFACES OF COVER SHALL BE MACHINE FINISHED WITH TOLERANCE OF 1/16 INCH AND 0 INCHES.
4. FIVE 1-1/4" DIAMETER HOLES, 5 INCHES FROM EDGE AND 72 DEGREES APART ARE REQUIRED.
5. "TELEPHONE" IN RAISED LETTERS 2-1/2" HIGH
6. FOUNDRY NAME OR INSIGNIA AND DATE (YEAR WHEN MANUFACTURED) SHALL BE CAST IN THE UNDERSIDE OF COVER.
7. RIBS TO BE TAPERED FROM 1/2" TO 3/4".
8. LIFTING NOTCH ADJACENT TO EACH PICK HOLE.
9. THE 32" COVER FITS INTO 30" FRAME. WEIGHT OF 32" COVER APPROXIMATELY 265 LBS.
10. USE LEBARON 324-1 OR EQUAL.

TELECOMMUNICATION MANHOLE FRAME AND COVER

N.T.S.

NOTE:
DETAILS SHOWN ON THIS SHEET ARE FOR BASIS OF DESIGN. DETAILS MAY BE MODIFIED OR ADDED PER COORDINATION WITH UTILITY COMPANY.

No.	DATE	DESCRIPTION	DESIGNER	REVIEWER

STATE OF CONNECTICUT · DEAN E. AUDERS · No. 17683 · LICENSED PROFESSIONAL ENGINEER

SEAL

SCALE:
HORZ.: NOT TO SCALE
VERT.:
DATUM:
HORZ.:
VERT.:

FUSS & O'NEILL
146 HARTFORD ROAD
MANCHESTER, CONNECTICUT 06040
860.646.2469
www.fando.com

CITY OF MERIDEN

TELECOMMUNICATION DETAILS

BRIDGE REPLACEMENTS AND UTILITY IMPROVEMENTS
BUTLER STREET AND HANOVER STREET

MERIDEN CONNECTICUT

PROJ. No.: 20170932.C38
DATE: FEBRUARY 27, 2024

CD-112

File Path: J:\DWG\P2017\0932\C11\Civil\Plan\20170932C11_DET01.dwg, Layout: CD-112 (PHASE 1), Plotted: Tue, Feb 27, 2024 - 4:56 PM User: SHuffman
PC3: AUTOCAD PDF (GENERAL DOCUMENTATION).PC3 STB/CTB: FO.STB
LAYER STATE:
MS VIEW:

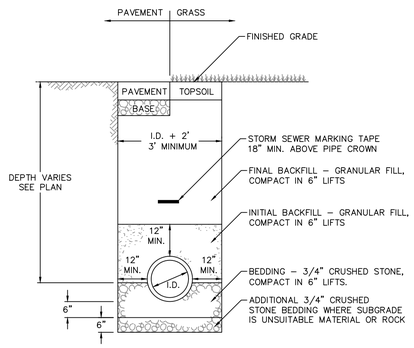

STORM SEWER TRENCH

SCALE: NOT TO SCALE

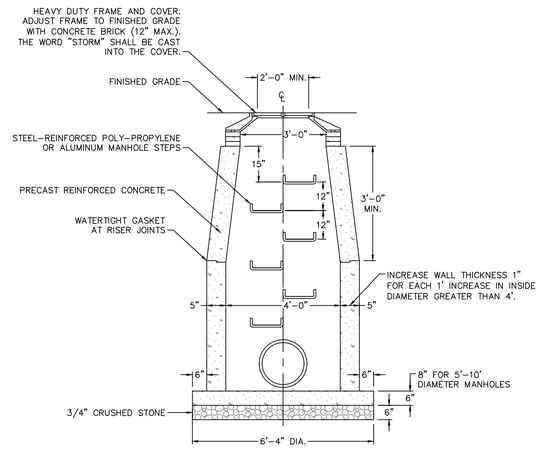

STORM MANHOLE

SCALE: NOT TO SCALE

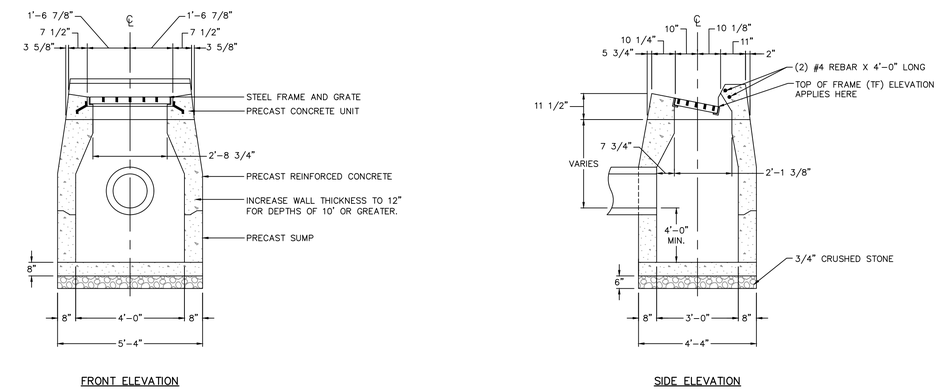

TYPE "C" CATCH BASIN

SCALE: NOT TO SCALE

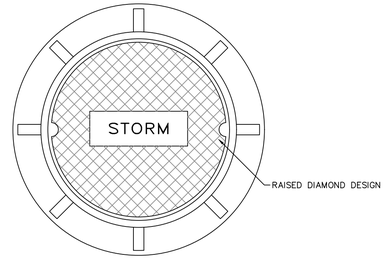

PLAN

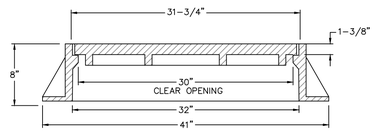

SECTION

STANDARD STORM MANHOLE FRAME & COVER

SCALE: NOT TO SCALE

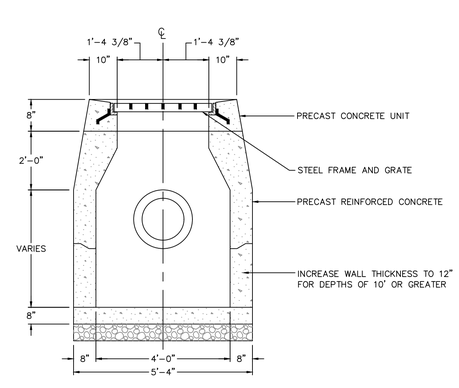

TYPE "C–L" CATCH BASIN

SCALE: NOT TO SCALE

No.	DATE	DESCRIPTION	DESIGNER	REVIEWER

STATE OF CONNECTICUT · DEAN E. AUDET · No. 17633 · LICENSED PROFESSIONAL ENGINEER

SEAL

SCALE:
HORZ.: NOT TO SCALE
VERT.:
DATUM:
HORZ.:
VERT.:

FUSS & O'NEILL
146 HARTFORD ROAD
MANCHESTER, CONNECTICUT 06040
860.646.2469
www.fando.com

CITY OF MERIDEN

STORM DRAINAGE DETAILS

BRIDGE REPLACEMENTS AND UTILITY IMPROVEMENTS
BUTLER STREET AND HANOVER STREET

MERIDEN CONNECTICUT

PROJ. No.: 20170932.C38
DATE: FEBRUARY 27, 2024

CD-113

File Path: J:\DWG\P\20170932\C11\Civil\Plan\20170932C11_DET01.dwg, Layout: CD-113 (PHASE 1), Plotted: Tue, Feb 27, 2024 - 4:56 PM User: SHuffman
PC3: AUTOCAD PDF (GENERAL DOCUMENTATION).PC3 STB/CTB: FO.STB
LAYER STATE:
MS VIEW:

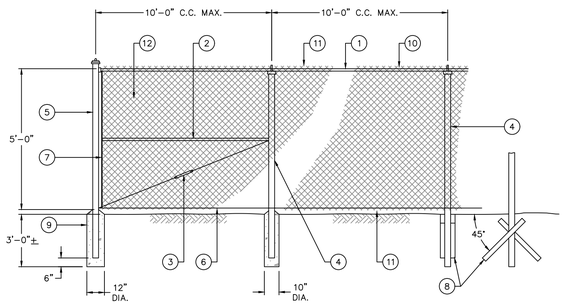

ELEVATION

NOTES

1. FOOTING DESIGN TO BE CHECKED BY AN ENGINEER FOR WIND LOADS IF SLATS ARE USED OR IF POOR SOIL CONDITIONS EXIST.
2. STRAIGHT RUNS BETWEEN BRACED POSTS SHALL NOT EXCEED 500 FT.
3. FENCE DETAILS ARE INTENDED AS A GUIDE ONLY. ALL FENCE MATERIALS AND CONSTRUCTION METHODS SHALL BE APPROVED BY THE ENGINEER AND FENCE MANUFACTURER.

CHAIN LINK FENCE LEGEND

(1) 1 5/8" O.D. TOP RAIL ATTACH FABRIC WITH 9 GUAGE WIRE CLIP EVERY 24"

(2) 1 5/8" O.D. BRACE FOR RAIL FENCES OVER 6 FEET HIGH AND ALL FENCES WITHOUT TOP RAIL

(3) 5/16" TRUSS ROD AND TURNBUCKLE

(4) INTERMEDIATE POST

FENCE HEIGHT	SQUARE POST	ROUND POST
6 FEET AND LESS	1 7/8"	2"
OVER 6 FEET	2 1/4"	2 1/2"

ATTACH TO C.L. FABRIC WITH CLIPS EVERY 15"

(5) END OR CORNER POST

FENCE HEIGHT	SQUARE POST	ROUND POST
6 FEET AND LESS	2"	2 1/2"
OVER 6 FEET	2 1/2"	3"

(6) 6 GAUGE BOTTOM TENSION WIRE ATTACH TO FABRIC WITH HOG RING AT 24" C.C.

(7) TENSION ROD ATTACHED TO END OR CORNER POST

(8) 2 30" MIN. LENGTH DRIVE ANCHORS DRIVEN THROUGH FITTINGS AT 90° TO FENCE LINE INTO EARTH AT 45° (TO BE USED IN PLACE OF CONCRETE FOOTING. SEE FOOTING DESIGN NOTE NO. 1)

(9) CONCRETE FOOTING 36" DEEP WITH 12" DIA. AT END POST AND 10" DIA. AT INTERMEDIATE POST. HOLE CORE IN UNDISTURBED OR COMPACTED SOIL. (SEE NOTE NO. 1)

(10) 6 GAUGE TENSION WIRE WHEN TOP RAIL IS NOT USED.

(11) FABRIC SELVAGE:
UNDER 6 FEET SHALL BE KNUCKLED TOP AND BOTTOM
6 FEET AND OVER SHALL BE KNUCKLED BOTTOM AND TWISTED ON THE TOP
RECREATIONAL FENCING, REGARDLESS OF HEIGHT, SHALL BE KNUCKLED TOP AND BOTTOM

(12) 9 GAUGE 2" WIRE MESH FABRIC (COMMERCIAL) BLACK VINYL COATED.

CHAIN LINK FENCE

SCALE: NOT TO SCALE

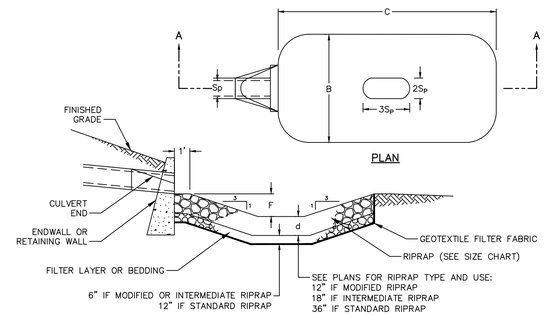

SECTION A–A

PIPE SIZE	12" OR LESS	15"	18"	24"	30"	36"	42"	48"	54"	60"
TYPE 1										
B	5'	6'	8'	10'	13'	15'	18'	20'	23'	25'
C	6'	8'	9'	12'	15'	18'	21'	24'	27'	30'
d	DEPENDS ON RIPRAP TYPE (SEE PLANS)									
$2S_P$	2.0'	2.6'	3.0'	4.0'	5.0'	6.0'	7.0'	8.0'	9.0'	10.0'
$3S_P$	3.0'	3.9'	4.5'	6.0'	7.5'	9.0'	10.5'	12.0'	13.5'	15.0'
$F=0.5S_P$	0.5'	0.625'	0.75'	1.0'	1.25'	1.5'	1.75'	2.0'	2.25'	2.5'
TYPE 2										
B	8'	10'	12'	16'	20'	24'	28'	32'	36'	40'
C	9'	11'	14'	18'	23'	27'	32'	36'	41'	45'
d	DEPENDS ON RIPRAP TYPE (SEE PLANS)									
$2S_P$	2'	2.6'	3.0'	4.0'	5.0'	6.0'	7.0'	8.0'	9.0'	10.0'
$3S_P$	3'	3.9'	4.5'	6.0'	7.5'	9.0'	10.5'	12.0'	13.5'	15.0'
$F=S_P$	1'	1.3'	1.5'	2.0'	2.5'	3.0'	3.5'	4.0'	4.5'	5.0'

NOTES:

1. SEE DRAINAGE PLANS FOR STILLING BASIN RIPRAP TYPE.

STILLING BASIN

SCALE: NOT TO SCALE

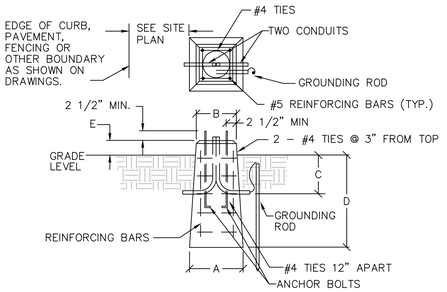

1) NUMBER, PATTERN AND SIZE OF ANCHOR BOLTS TO BE SPECIFIED BY LIGHTING POLE MANUFACTURER.

2) 4,000 PSI CONCRETE CURED FOR 7 DAYS PRIOR TO BACKFILL.

3) NO. 6 REINFORCING BARS, ASTM A 615, GRADE 60 WITH MINIMUM 2" COVER.

4) EACH LIGHTING POLE SHALL BE GROUNDED WITH 8' LONG 3/4" DIAMETER COPPER GROUNDING ROD AND #6 AWG BAR COPPER CONDUCTOR. TOP OF GROUNDING ROD SHALL BE 6" BELOW GRADE.

SQUARE POLE BASE DIMENSIONS					
FIXTURE TYPE	DIMENSION "A"	DIMENSION "B"	DIMENSION "C"	DIMENSION "D"	DIMENSION "E"
A	18"	18"	24"	5'–9"	6"

LIGHT POLE BASE

SCALE: NOT TO SCALE

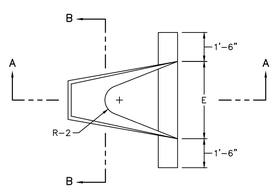

PLAN

DIMENSIONS						
DIA.	A	B	C	D	E	F
12"	4"	2'–0"	6'–0 3/8"	6'–0 3/8"	2'–0"	1'–7 15/16"
15"	6"	2'–3"	3'–10"	6'–1"	2'–6"	2'–0 5/16"
18"	9"	2'–3"	3'–10"	6'–1"	3'–0"	2'–5"
24"	9 1/2"	3'–7 1/2"	2'–6"	6'–1 1/2"	4'–0"	2'–9 3/16"
30"	1'–0"	4'–6"	1'–7 3/4"	6'–1 3/4"	5'–0"	3'–1"
36"	1'–3"	5'–3"	2'–10 3/4"	8'–1 3/4"	6'–0"	3'–11 13/16"
42"	1'–9"	5'–3"	2'–11"	8'–2"	6'–6"	4'–5 7/8"
48"	2'–0"	6'–0"	2'–2"	8'–2"	7'–0"	4'–8 1/2"

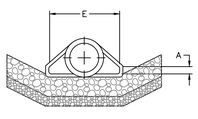

END VIEW

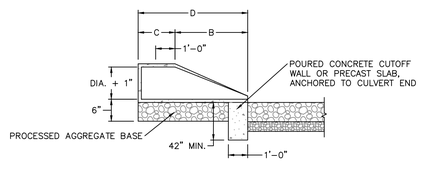

SECTION A–A

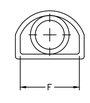

SECTION B–B

REINFORCED CONCRETE DRAINAGE PIPE END

SCALE: NOT TO SCALE

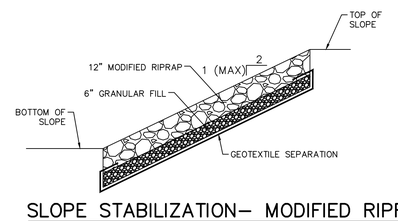

SLOPE STABILIZATION– MODIFIED RIPRAP

SCALE: NOT TO SCALE

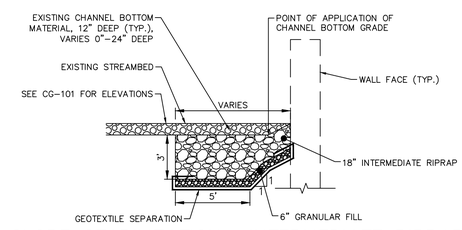

SLOPE STABILIZATION– INTERMEDIATE RIPRAP (ADJACENT TO WALL)

SCALE: NOT TO SCALE

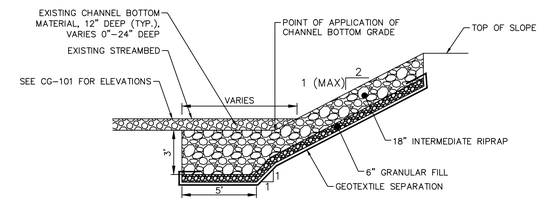

SLOPE STABILIZATION– INTERMEDIATE RIPRAP

SCALE: NOT TO SCALE

No.	DATE	DESCRIPTION	DESIGNER	REVIEWER

STATE OF CONNECTICUT · DEAN E. AUDETT · No. 17623 · LICENSED PROFESSIONAL ENGINEER

SEAL

SCALE:
HORZ.: NOT TO SCALE
VERT.:
DATUM:
HORZ.:
VERT.:

FUSS & O'NEILL
146 HARTFORD ROAD
MANCHESTER, CONNECTICUT 06040
860.646.2469
www.fando.com

CITY OF MERIDEN

GENERAL SITE DETAILS

BRIDGE REPLACEMENTS AND UTILITY IMPROVEMENTS
BUTLER STREET AND HANOVER STREET

MERIDEN CONNECTICUT

PROJ. No.: 20170932.C38
DATE: FEBRUARY 27, 2024

CD-114

File Path: J:\DWG\P2017\0932\C11\Civil\Plan\20170932C11_DET01.dwg, Layout: CD-114 (PHASE I), Plotted: Tue, Feb 27, 2024 - 4:56 PM User: SHuffman
PC3: AUTOCAD PDF (GENERAL DOCUMENTATION).PC3 STB/CTB: FO.STB
LAYER STATE:
MS VIEW:

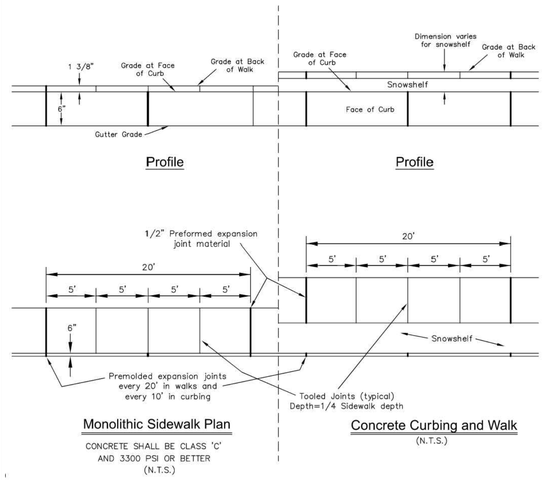

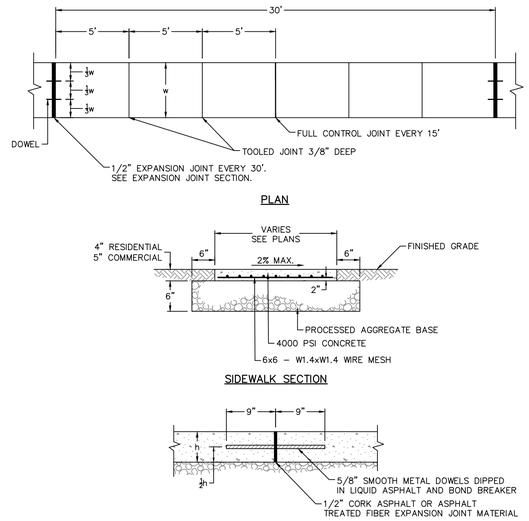

CONCRETE SIDEWALK

SCALE: NOT TO SCALE

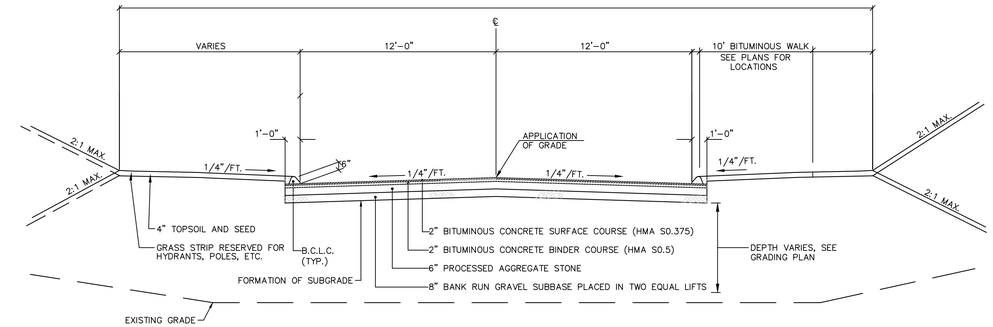

BUTLER STREET TYPICAL ROADWAY SECTION

SCALE: NOT TO SCALE

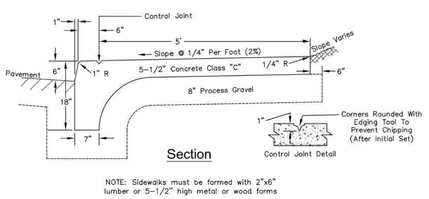

MONOLITHIC CURB & SIDEWALK

SCALE: NOT TO SCALE

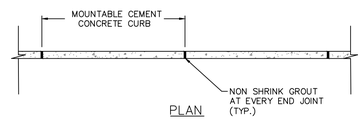

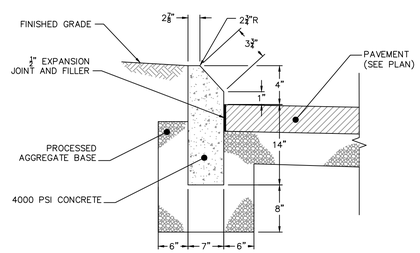

NOTES

1. 1/2 INCH EXPANSION JOINT AND FILLER EVERY 30 FEET.
2. 1/2 INCH EXPANSION JOINT AND FILLER WHERE CURB ABUTS EXTRA HEAVY DUTY CONCRETE PAVEMENT.

MOUNTABLE CONCRETE CURB

SCALE: NOT TO SCALE

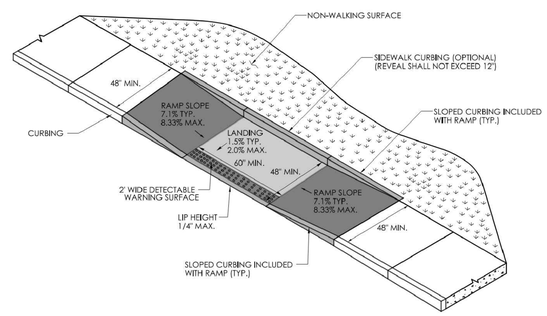

PARALLEL RAMP WITHOUT NON–WALKING SURFACE (TYPE 9)

SCALE: NOT TO SCALE

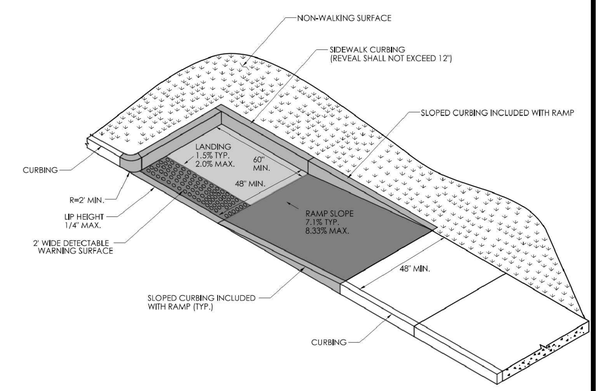

PARALLEL RAMP WITH LANDING AT BOTTOM ON CORNER (TYPE 10)

SCALE: NOT TO SCALE

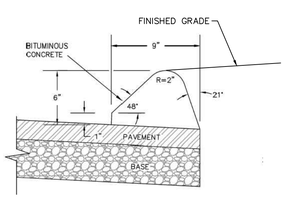

BITUMINOUS CONCRETE LIP CURBING MACHINE FORMED

SCALE: NOT TO SCALE

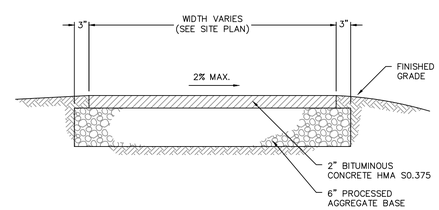

BITUMINOUS CONCRETE SIDEWALK

SCALE: NOT TO SCALE

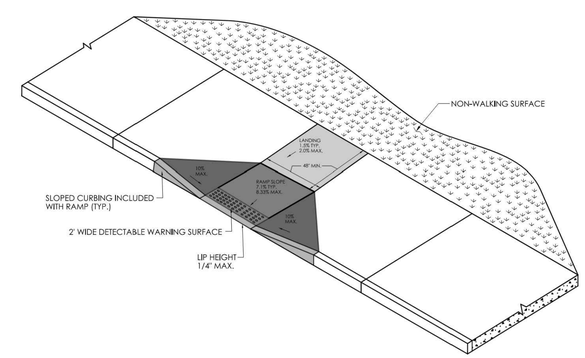

PERPENDICULAR RAMP WITH 48" BY–PASS (TYPE 8)

SCALE: NOT TO SCALE

No.	DATE	DESCRIPTION	DESIGNER	REVIEWER

STATE OF CONNECTICUT · DEAN E. AUDET · No. 17683 · LICENSED PROFESSIONAL ENGINEER

SEAL

SCALE: HORZ.: NOT TO SCALE; VERT.:
DATUM: HORZ.: ; VERT.:

FUSS & O'NEILL
146 HARTFORD ROAD
MANCHESTER, CONNECTICUT 06040
860.646.2469
www.fando.com

CITY OF MERIDEN

GENERAL SITE DETAILS

BRIDGE REPLACEMENTS AND UTILITY IMPROVEMENTS
BUTLER STREET AND HANOVER STREET

MERIDEN CONNECTICUT

PROJ. No.: 20170932.C38
DATE: FEBRUARY 27, 2024

CD-115

File Path: J:\DWG\P2017\0932\C11\Civil\Plan\20170932C11_DET01.dwg, Layout: CD-115 (PHASE 1), Plotted: Tue, Feb 27, 2024 - 4:56 PM User: Shuffman
PC3: AUTOCAD PDF (GENERAL DOCUMENTATION).PC3 STB/CTB: FO.STB
LAYER STATE:
MS VIEW:

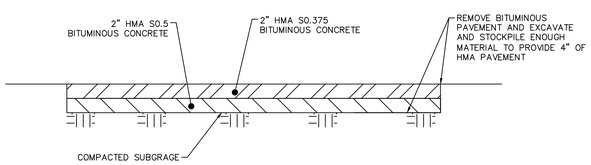

BITUMINOUS CONCRETE SURFACE DETAIL

SCALE: NOT TO SCALE

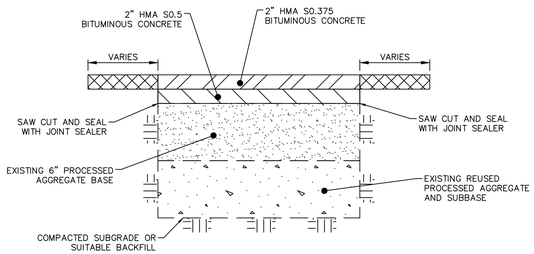

BITUMINOUS CONCRETE PAVEMENT

SCALE: NOT TO SCALE

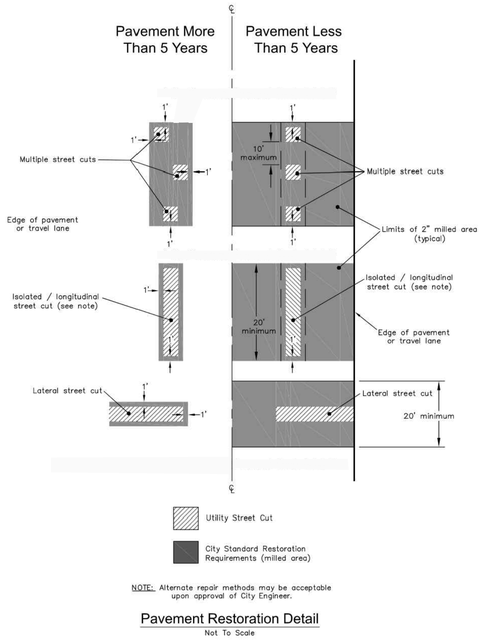

Pavement Restoration Detail
Not To Scale

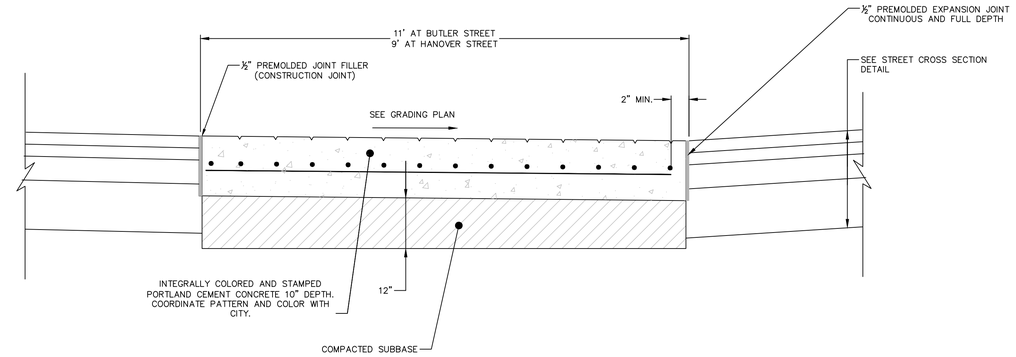

STAMPED CONCRETE DRIVEWAY APRON

SCALE: NOT TO SCALE

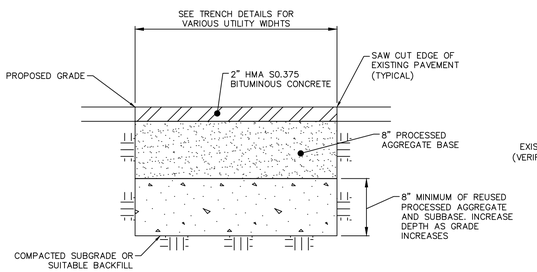

TEMPPORARY PAVEMENT REPAIR DETAIL

SCALE: NOT TO SCALE

ROADWAY STANDARD NOTES:

1. MULTIPLE PAVEMENT REPAIR LOCATIONS ARE TO BE A MINIMUM OF 10 FEET APART FROM ANY ADJACENT REPAIR. IF LESS THAN 10 FEET APART, A CONTINUOUS SECTION MUST BE REPLACED. MILLING IS ACCEPTABLE OUTSIDE THE PATCH REPAIR LIMITS.
2. ALL REPAIRS TO STREETS WITH A PAVEMENT SURFACE LESS THAN 5 YEARS OLD ARE TO EXTEND TO THE FULL WIDTH OF THE TRAVEL LANE OR TO THE EDGE OF THE ROADWAY.
3. TEMPORARY PATCHES SHALL BE IN PLACE A MINIMUM OF 6 MONTHS, INCLUDING ONE WINTER / SPRING SEASON.
4. PATCH AREA MUST BE WIDE ENOUGH TO ACCOMMODATE MECHANICAL COMPACTION EQUIPMENT.
5. REFER TO PAVEMENT RESTORATION DETAIL FOR ADDITIONAL REQUIREMENTS.

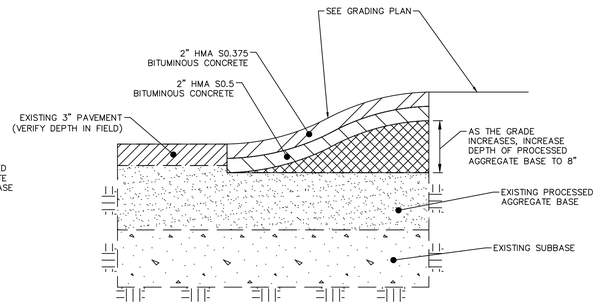

PAVING DETAIL FOR SURFACE INCREASES FROM 0" TO 12"

SCALE: NOT TO SCALE

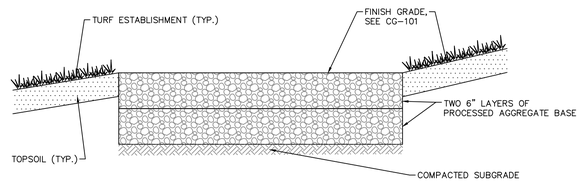

TEMPORARY PROCESSED AGGREGATE BASE PARKING LOT

SCALE: NOT TO SCALE

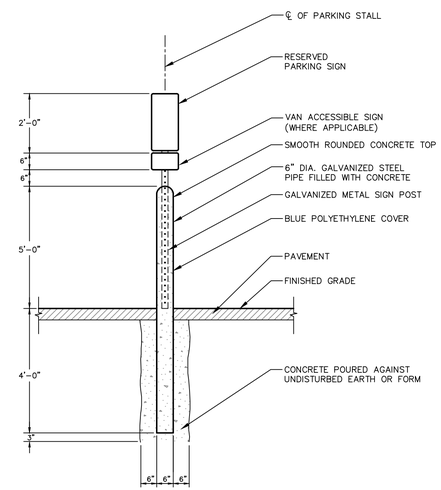

RESERVED PARKING SIGN POST

SCALE:NOT TO SCALE

No.	DATE	DESCRIPTION	DESIGNER	REVIEWER

STATE OF CONNECTICUT · DEAN E. AUGER · No. 17623 · LICENSED PROFESSIONAL ENGINEER

SEAL

SCALE: HORZ.: NOT TO SCALE; VERT.:
DATUM: HORZ.: VERT.:

FUSS & O'NEILL
146 HARTFORD ROAD
MANCHESTER, CONNECTICUT 06040
860.646.2469
www.fando.com

CITY OF MERIDEN

GENERAL SITE DETAILS

BRIDGE REPLACEMENTS AND UTILITY IMPROVEMENTS
BUTLER STREET AND HANOVER STREET

MERIDEN CONNECTICUT

PROJ. No.: 20170932.C38
DATE: FEBRUARY 27, 2024

CD-116

File Path: J:\DWG\P20170932\C11\Civil\Plan\20170932C11_DET01.dwg, Layout: CD-116 (PHASE 1), Plotted: Tue, Feb 27, 2024 - 4:56 PM User: SHuffman
PC3: AUTOCAD PDF (GENERAL DOCUMENTATION).PC3 STB/CTB: FO.STB
LAYER STATE:
MS VIEW:

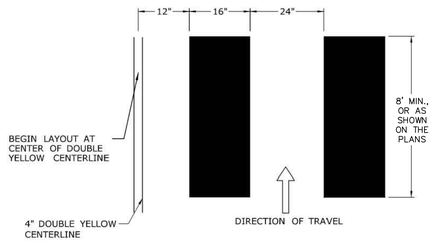

CROSSWALK DETAIL (WHITE)

SCALE: NOT TO SCALE

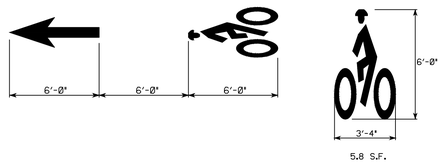

BICYCLE LANE SYMBOL

SCALE: NOT TO SCALE

NOTES

CDOT NUMBER:
ALUMINUM THICKNESS: .080"
BACKGROUND: BLUE (REF.)
LEGEND: SILVER (REF.)
POSTS: SEE "RESERVED PARKING SIGN AND POST" DETAIL

RESERVED PARKING SIGN

SCALE: N.T.S.

NOTE:
RESERVED SYMBOL SHALL CONFORM TO THE 2016 CONNECTICUT STATE BUILDING CODE SECTION 703.6.3.1 INTERNATIONAL SYMBOL OF ACCESSIBILITY.

RESERVED PARKING SYMBOL

SCALE: N.T.S.

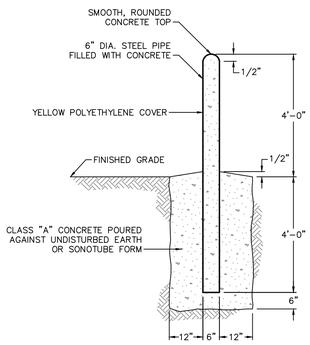

STEEL BOLLARD

SCALE: NOT TO SCALE

REMOVE AND RESET BOLLARD

SCALE: NOT TO SCALE

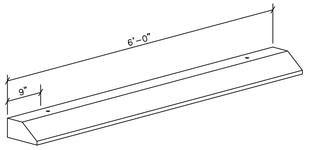

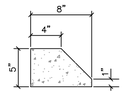

SECTION

NOTES:

1. 1. 1/2" DIA. 18" LONG GALVANIZED STEEL ROD WITH EPOXY TO SECURE IN PAVEMENT
2. 4,000 PSI CONCRETE

PRECAST CONCRETE WHEEL STOP

SCALE: N.T.S.

No.	DATE	DESCRIPTION	DESIGNER	REVIEWER

STATE OF CONNECTICUT · DEAN E. AUDET · No. 17623 · LICENSED PROFESSIONAL ENGINEER

SEAL

SCALE:
HORZ.: NOT TO SCALE
VERT.:
DATUM:
HORZ.:
VERT.:

FUSS & O'NEILL
146 HARTFORD ROAD
MANCHESTER, CONNECTICUT 06040
860.646.2469
www.fando.com

CITY OF MERIDEN

GENERAL SITE DETAILS

BRIDGE REPLACEMENTS AND UTILITY IMPROVEMENTS
BUTLER STREET AND HANOVER STREET
MERIDEN CONNECTICUT

PROJ. No.: 20170932.C38
DATE: FEBRUARY 27, 2024

CD-117

File Path: J:\DWG\P2017\0932\C11\Civil\Plan\20170932C11_DET01.dwg, Layout: CD-117 (PHASE 1), Plotted: Tue, Feb 27, 2024 - 4:56 PM User: SHuffman
MS VIEW: LAYER STATE: PC3: AUTOCAD PDF (GENERAL DOCUMENTATION).PC3 STB/CTB: FO.STB

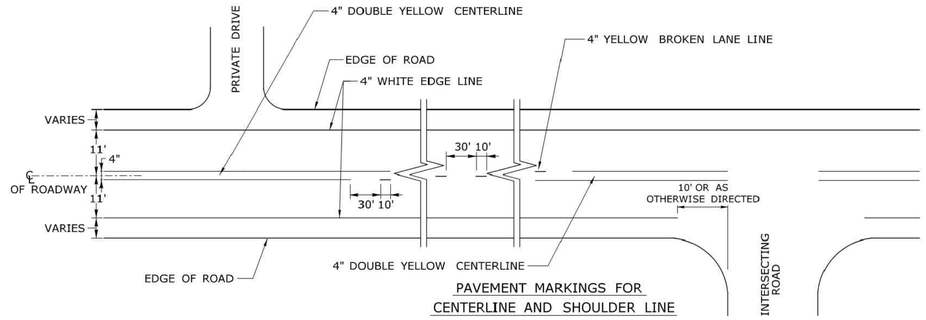

PAVEMENT MARKINGS FOR CENTERLINE AND SHOULDER LINE

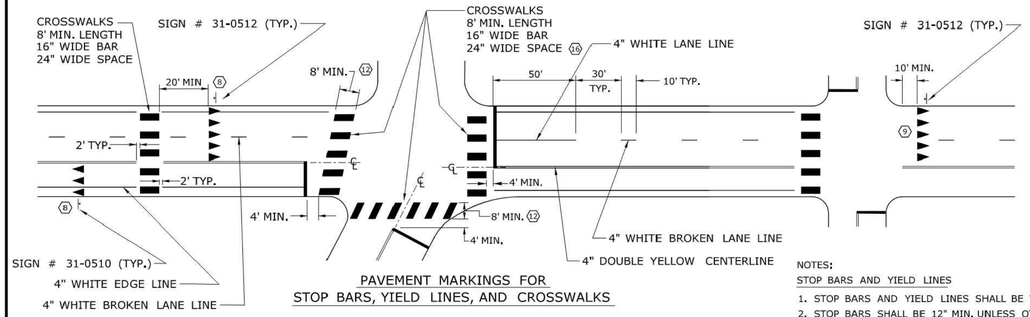

PAVEMENT MARKINGS FOR STOP BARS, YIELD LINES, AND CROSSWALKS

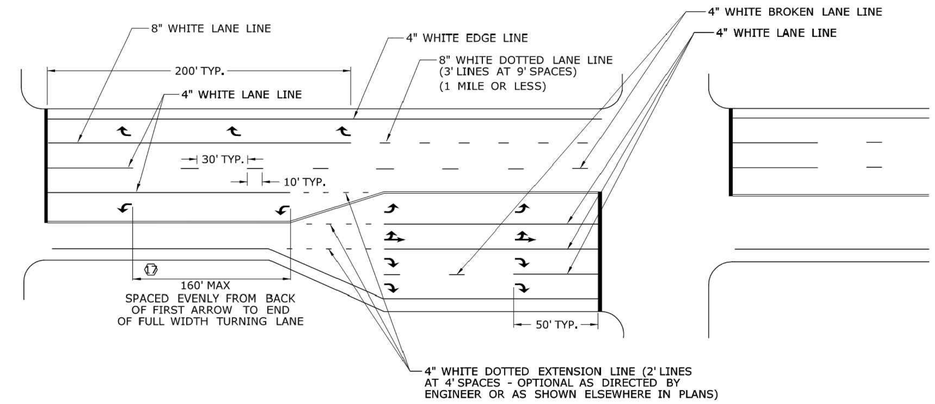

PAVEMENT MARKINGS FOR TURNING LANES AND ROAD LANE-DROP

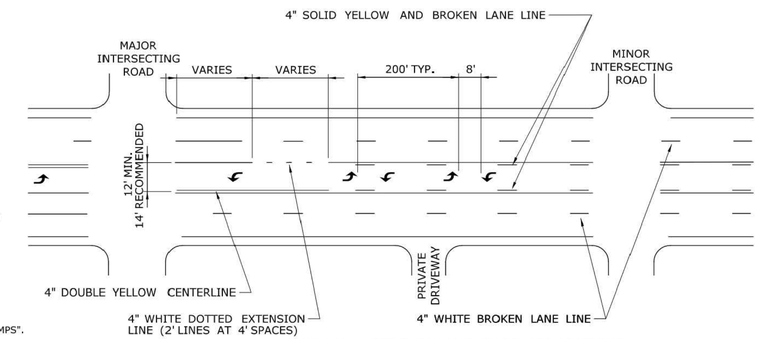

TWO-WAY LEFT-TURN MARKINGS APPLICATIONS

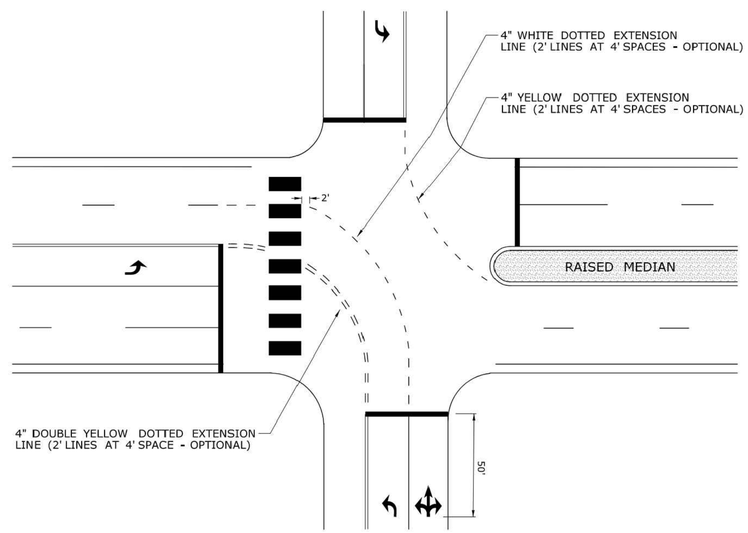

TURNING EXTENSIONS

NOTES:

STOP BARS AND YIELD LINES

1. STOP BARS AND YIELD LINES SHALL BE WHITE.
2. STOP BARS SHALL BE 12" MIN. UNLESS OTHERWISE NOTED ON PLANS.
3. STOP BARS TO BE PLACED A MINIMUM OF 4' IN ADVANCE OF THE NEAREST EDGE OF CROSSWALK AND SHOULD BE PLACED 90° TO THE CENTERLINE OF THE ROADWAY.
4. IN THE ABSENCE OF A MARKED CROSSWALK THE STOP BAR SHOULD BE PLACED 90° TO THE CENTERLINE OF THE ROADWAY, AT THE DESIRED STOPPING POINT AT LEAST 5' AND NO MORE THAN 30' FROM THE NEAREST EDGE OF THE INTERSECTING ROADWAY.
5. THE STOP SIGN SHOULD BE PLACED IN LINE WITH THE STOP BAR. HOWEVER, IF THE STOP SIGN CANNOT BE LOCATED EXACTLY WHERE VEHICLES ARE EXPECTED TO STOP, THE STOP BAR SHOULD BE PLACED AT THE STOPPING POINT.
6. FOR STOP BARS AT RAMPS SEE DETAILS "R", "S", "T", & "U" AND NOTES ON TRAFFIC STANDARD SHEET TR-1210 07 "PAVEMENT MARKINGS FOR DIVIDED HIGHWAYS EXIT RAMPS".
7. FOR YIELD LINE INSTALLATIONS, ONLY FULL TRIANGLES ARE TO BE INSTALLED.
8. MID-BLOCK CROSSWALKS ARE CROSSWALKS LOCATED MORE THAN 50 FEET FROM A SIGNALIZED OR UNSIGNALIZED INTERSECTION. YIELD LINES ASSOCIATED WITH MIDBLOCK CROSSWALKS SHALL BE INSTALLED AND SHOULD BE LOCATED 20 TO 50 FEET IN ADVANCE OF THE NEAREST CROSSWALK LINE OR AS DIRECTED BY THE ENGINEER.
   WHERE A YIELD LINE EXISTS ON AN APPROACH TO A CROSSWALK, THE APPROAPRIATE "YIELD TO PEDESTRIANS" SIGN IS REQUIRED.
9. FOR CROSSWALKS AT UNSIGNALIZED INTERSECTIONS WITH MINOR STREET STOP CONTROL, YIELD LINES SHALL BE INSTALLED ON MULTI-LANE APPROACHES, BUT NOT SINGLE LANE APPROACHES.
10. THE YIELD SIGN SHOULD BE PLACED IN LINE WITH A YIELD LINE. HOWEVER, IF THE YIELD SIGN CANNOT BE LOCATED EXACTLY WHERE VEHICLES ARE EXPECTED TO YIELD, THE YIELD LINE SHOULD BE PLACED AT THE YIELDING POINT.

CROSSWALKS

11. CROSSWALK MARKINGS SHALL BE WHITE.
12. AT LOCATIONS WHERE THE CROSSWALK IS SKEWED, BARS TO BE PARALLEL TO ℄ AND ENDS OF BARS TO BE PARALLEL. THE LENGTH OF THE BARS WILL VARY DEPENDING ON THE ANGLE OF SKEW.
13. BARS SHOULD BE NO CLOSER THAN 1' FROM EDGE OF ROAD.
14. ONLY FULL LENGTH BARS ARE TO BE INSTALLED.
15. DECORATIVE CROSSWALKS SHALL BE BANDED FROM CURB TO CURB WITH A MINIMUM 12" WIDE WHITE TRANSVERSE LINE ALONG EACH EDGE.
16. 24" WIDE SPACE TO BE CENTERED ON YELLOW CENTERLINE.

PAVEMENT MARKINGS FOR TURNING LANES

17. INSTALL AT LEAST TWO ARROWS PER LANE WHERE STORAGE LENGTH IS GREATER THAN 150 FEET.

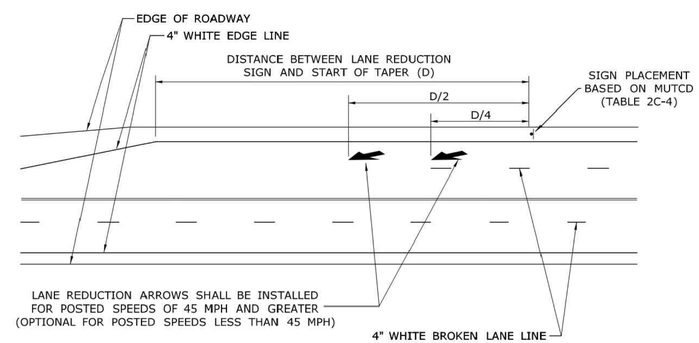

LANE REDUCTION TRANSITIONS

REV.	DATE	REVISION DESCRIPTION
1	8-2018	REVISED YIELD LINE SIGNAGE AND NOTES.

THE INFORMATION, INCLUDING ESTIMATED QUANTITIES OF WORK, SHOWN ON THESE SHEETS IS BASED ON LIMITED INVESTIGATIONS BY THE STATE AND IS IN NO WAY WARRANTED TO INDICATE THE CONDITIONS OF ACTUAL QUANTITIES OF WORK WHICH WILL BE REQUIRED.

Plotted Date: 8/10/2018

NOT TO SCALE

STATE OF CONNECTICUT
DEPARTMENT OF TRANSPORTATION

Filename: TR-1210_08.DGN Model: TR-1210_05

SUBMITTED BY: NAME/DATE/TIME: Mark F. Makuch, P.E. 2018.08.17 09:10:18-04'00'

APPROVED BY: NAME/DATE/TIME: Mark F. Carlino, P.E. 2018.08.21 07:49:18-04'00'

CTDOT STANDARD SHEET

OFFICE OF ENGINEERING

STANDARD SHEET TITLE: PAVEMENT MARKINGS FOR NON FREEWAYS

STANDARD SHEET NO.: TR-1210_08

No.	DATE	DESCRIPTION	DESIGNER	REVIEWER

SEAL

SCALE: HORZ.: NOT TO SCALE VERT.:

DATUM: HORZ.: VERT.:

FUSS & O'NEILL
146 HARTFORD ROAD
MANCHESTER, CONNECTICUT 06040
860.646.2469
www.fando.com

CITY OF MERIDEN

GENERAL SITE DETAILS

BRIDGE REPLACEMENTS AND UTILITY IMPROVEMENTS
BUTLER STREET AND HANOVER STREET

MERIDEN CONNECTICUT

PROJ. No.: 20170932.C38
DATE: FEBRUARY 27, 2024

CD-118

File Path: J:\DW\GIP\2017\0932\C11\Civil\Plan\20170932C11_DET01.dwg, Layout: CD-118 (PHASE 1), Plotted: Tue, Feb 27, 2024 - 4:56 PM User: SHuffman
PC3: AUTOCAD PDF (GENERAL DOCUMENTATION).PC3 STB/CTB: FO.STB
LAYER STATE:
MS VIEW:

GENERAL NOTES:

1. ALTERNATE DESIGNS FOR LIFTING KEYS, HOLES OR OTHER HANDLING DEVICES MAY BE SUBMITTED TO THE ENGINEER FOR APPROVAL.
2. EXPECTED PERMANENT DYNAMIC DEFLECTION IS 3'-6" BASED ON TL-3 CRASH TESTS WITH 240' OF TPCBC.

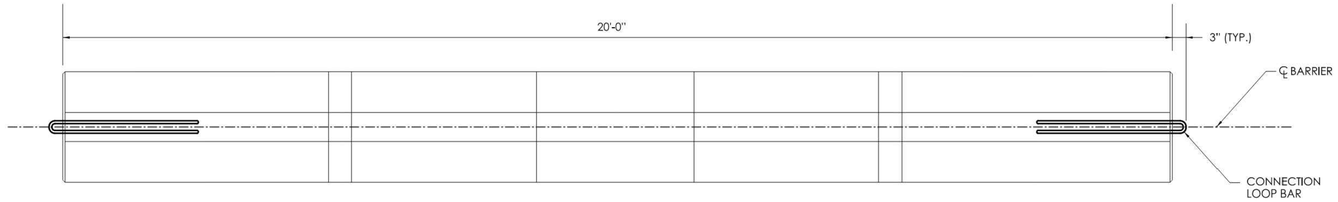

PLAN

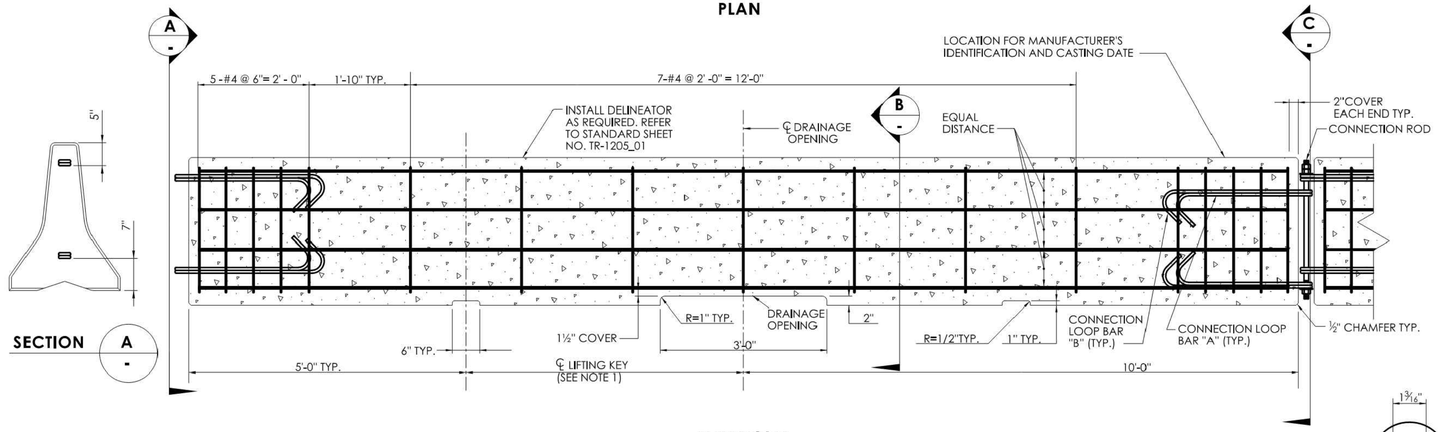

ELEVATION

SECTION A

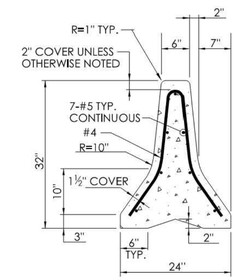

SECTION B

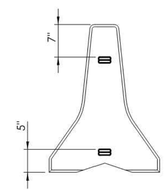

END VIEW C

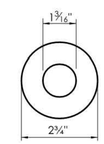

WASHER DETAIL

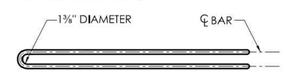

PLAN

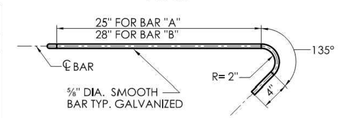

ELEVATION

BAR " A " = 6' - 0" TOTAL
BAR " B " = 6' - 6" TOTAL

CONNECTION LOOP BAR

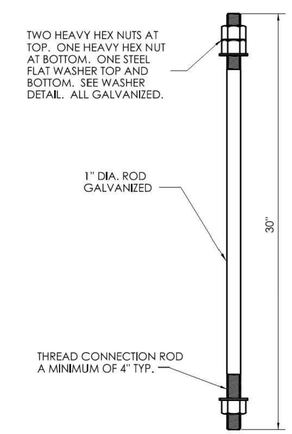

CONNECTION ROD

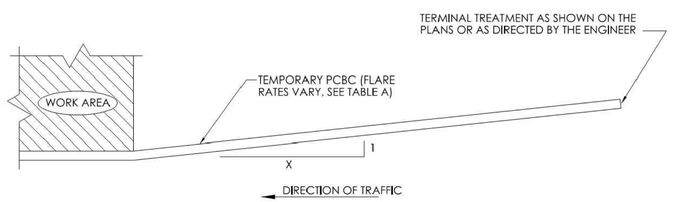

PLAN - TYPICAL INSTALLATION

TABLE A FLARE RATES

* SPEED	FLARE RATE (X : 1)
≤ 30MPH	4 : 1
> 30MPH BUT < 45MPH	6 : 1
≥ 45MPH NON-LIMITED ACCESS HIGHWAYS	8 : 1
ALL LIMITED ACCESS HGHWAYS	10 : 1

* DESIGN SPEED THROUGH THE WORK AREA.

	NOT TO SCALE	SIGNATURE BLOCK: OFFICE OF ENGINEERING 2800 BERLIN TURNPIKE NEWINGTON, CT 06111	SUBMITTED BY: Digitally signed by Leo Fontaine, P.E. Date: 2022.09.27 15:00:00-04'00'	APPROVED BY: Digitally signed by Calabrese, Michael Date: 2022.11.08 10:22:53-05'00'	STATE OF CONNECTICUT DEPARTMENT OF TRANSPORTATION	CTDOT STANDARD SHEET	STANDARD SHEET TITLE: TEMPORARY PRECAST CONCRETE BARRIER CURB	STANDARD SHEET NO.: HW- 822_01

PLOTTED DATE: 9/21/2022

No.	DATE	DESCRIPTION	DESIGNER	REVIEWER

SEAL

SCALE: HORZ.: NOT TO SCALE; VERT.:
DATUM: HORZ.: VERT.:

FUSS & O'NEILL
146 HARTFORD ROAD
MANCHESTER, CONNECTICUT 06040
860.646.2469
www.fando.com

CITY OF MERIDEN

GENERAL SITE DETAILS

BRIDGE REPLACEMENTS AND UTILITY IMPROVEMENTS
BUTLER STREET AND HANOVER STREET
MERIDEN CONNECTICUT

PROJ. No.: 20170932.C38
DATE: FEBRUARY 27, 2024

CD-119

File Path: J:\DW\GIP2017\0932\C11\Civil\Plan\20170932C11_DET01.dwg, Layout: CD-119 (PHASE 1), Plotted: Tue, Feb 27, 2024 - 4:56 PM User: SHuffman
PC3: AUTOCAD PDF (GENERAL DOCUMENTATION).PC3 STB/CTB: FO.STB
LAYER STATE:
MS VIEW:

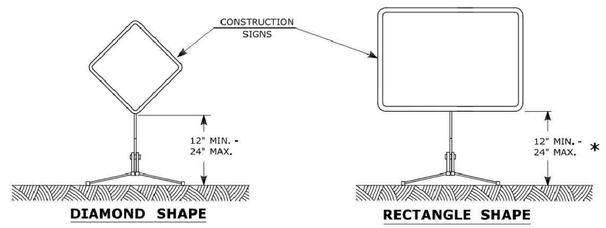

PORTABLE CONSTRUCTION SIGNS

NOTES FOR PORTABLE SIGN SUPPORTS:

1. SIGNS AND THEIR PORTABLE SUPPORTS SHALL CONFORM TO THE REQUIREMENTS OF NCHRP REPORT 350 (TL-3) OR THE AASHTO MASH FOR CATEGORY 2 DEVICES AND THE LATEST EDITION OF THE MUTCD.
2. MOUNTING HEIGHT OF SIGNS SHALL BE A MINIMUM OF 12" AND A MAXIMUM OF 24". SIGNS SHALL BE MOUNTED HIGHER AS NEEDED TO MEET FIELD CONDITIONS OR AS DIRECTED BY THE ENGINEER.
3. THE ENGINEER RESERVES THE RIGHT TO REJECT ANY SUPPORT DEEMED UNSUITABLE FOR THE PURPOSE INTENDED.
4. PORTABLE SIGN SUPPORTS SHALL BE STABILIZED IN A MANNER THAT WILL NOT AFFECT THEIR COMPLIANCE WITH NCHRP REPORT 350 (TL-3) OR THE AASHTO MASH FOR CATEGORY 2 DEVICES.
5. PORTABLE CONSTRUCTION SIGN SUPPORTS SHOULD NOT BE USED FOR DURATION OF MORE THAN 3 DAYS EXCEPT FOR R9-8 THROUGH R9-11a SERIES, R11 SERIES, W1-6 THROUGH W1-8 SERIES, M4-10, AND E5-1. SEE STANDARD SHEET TR-1220_01 - "SIGNS FOR CONSTRUCTION AND PERMIT OPERATIONS" FOR SIGN DETAILS.

* FOR E5-1 (EXIT SIGNS) USE MIN 48".

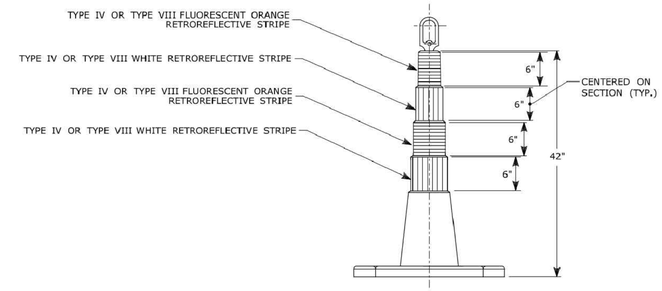

42" TRAFFIC CONE

NOTES:

1. TRAFFIC CONES SHALL CONFORM TO THE REQUIREMENTS OF NCHRP REPORT 350 (TL-3) OR THE AASHTO MASH FOR CATEGORY 1 DEVICES AND THE LATEST EDITION OF THE MUTCD.
2. IF RUBBER CONES ARE USED, THEY SHALL HAVE INTERIOR RIBS FOR RIGIDITY.
3. IF PLASTIC CONES ARE USED, THEY SHALL BE COLOR IMPREGNATED.
4. THE ENGINEER RESERVES THE RIGHT TO REJECT ANY CONE DEEMED UNSUITABLE FOR THE PURPOSE INTENDED.
5. THE ENTIRE AREA OF FLUORESCENT ORANGE AND WHITE STRIPES SHALL BE RETROREFLECTIVE SHEETING AS REQUIRED IN THE SPECIFICATIONS.
6. THE SECTIONS OF CONES NOT COVERED WITH RETROREFLECTIVE STRIPES SHALL BE ORANGE.

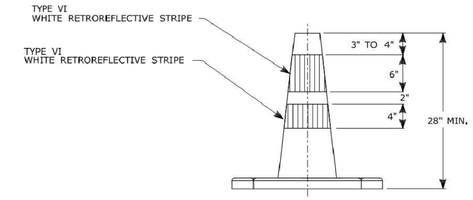

TRAFFIC CONE

NOTES:

1. TRAFFIC CONES SHALL CONFORM TO THE REQUIREMENTS OF NCHRP REPORT 350 (TL-3) OR THE AASHTO MASH FOR CATEGORY 1 DEVICES AND THE LATEST EDITION OF THE MUTCD.
2. IF RUBBER CONES ARE USED, THEY SHALL HAVE INTERIOR RIBS FOR RIGIDITY.
3. IF PLASTIC CONES ARE USED, THEY SHALL BE COLOR IMPREGNATED.
4. THE ENGINEER RESERVES THE RIGHT TO REJECT ANY CONE DEEMED UNSUITABLE FOR THE PURPOSE INTENDED.
5. THE ENTIRE AREA OF WHITE STRIPES SHALL BE RETROREFLECTIVE SHEETING AS REQUIRED IN THE SPECIFICATIONS.
6. TRAFFIC CONES NOT USED AT NIGHT MAY UTILIZE TYPE III SHEETING.
7. THE SECTIONS OF CONES NOT COVERED WITH RETROREFLECTIVE STRIPES SHALL BE ORANGE.

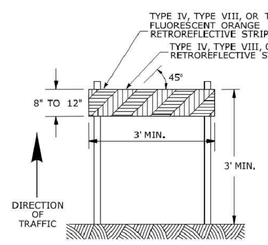

TYPE I BARRICADE

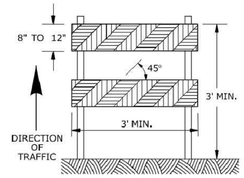

TYPE II BARRICADE

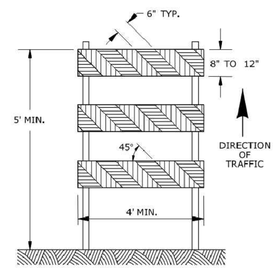

TYPE III BARRICADE

CONSTRUCTION BARRICADES

NOTES:

1. CONSTRUCTION BARRICADES SHALL CONFORM TO THE REQUIREMENTS OF NCHRP REPORT 350 (TL-3) OR THE AASHTO MASH AND THE LATEST EDITION OF THE MUTCD.
2. MARKINGS FOR BARRICADE RAILS SHALL BE ALTERNATE FLUORESCENT ORANGE AND WHITE STRIPES SLOPING DOWNWARD IN THE DIRECTION TRAFFIC IS TO PASS. 6" WIDE STRIPES SHALL BE USED.
3. THE ENTIRE AREA OF FLUORESCENT ORANGE AND WHITE STRIPES SHALL BE RETROREFLECTIVE SHEETING AS REQUIRED IN THE SPECIFICATIONS. THE SIDES OF BARRICADES FACING TRAFFIC SHALL HAVE RETROREFLECTIVE RAIL FACES.
4. THE ENGINEER RESERVES THE RIGHT TO REJECT ANY BARRICADE DEEMED UNSUITABLE FOR THE PURPOSE INTENDED.
5. CORNERS OF BARRICADE RAILS SHALL BE ROUNDED.
6. SIGNS MAY ONLY BE INSTALLED ON TYPE III BARRICADES AND SHALL BE PLACED SO AS TO COVER NO MORE THAN ONE BARRICADE RAIL.

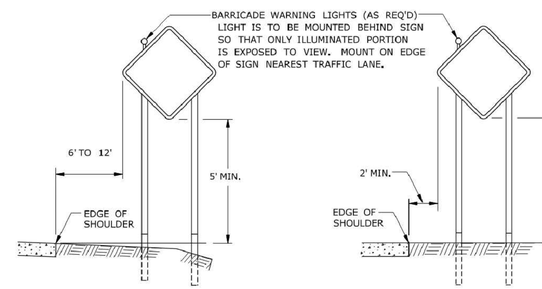

RURAL AREA

URBAN AREA

PLACEMENT OF CONSTRUCTION SIGNS TYPICAL LONG TERM INSTALLATION

NOTES:

SUPPORTS SHALL BE METAL SIGN POSTS AND HAVE BREAK-AWAY FEATURES.

REFER TO STANDARD SHEETS:
TR-1208_01 - "SIGN PLACEMENT AND RETROREFLECTIVE STRIP DETAILS."
TR-1208_02 - "METAL SIGN POSTS AND SIGN MOUNTING DETAILS."

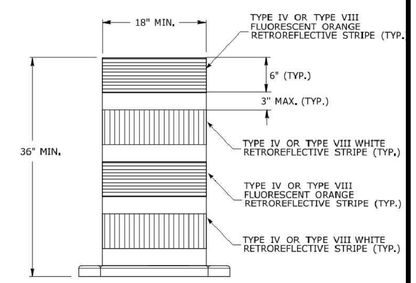

TRAFFIC DRUM FRONT VIEW

NOTES:

1. TRAFFIC DRUM SHALL CONFORM TO THE REQUIREMENTS OF NCHRP REPORT 350 (TL-3) OR THE AASHTO MASH FOR CATEGORY 1 DEVICES AND THE LATEST EDITION OF THE MUTCD.
2. THE ENGINEER RESERVES THE RIGHT TO REJECT ANY DRUM DEEMED UNSUITABLE FOR THE PURPOSE INTENDED.
3. THE ENTIRE AREA OF FLUORESCENT ORANGE AND WHITE STRIPES SHALL BE RETROREFLECTIVE SHEETING AS REQUIRED IN THE SPECIFICATIONS.
4. THE SECTIONS OF DRUMS NOT COVERED WITH RETROREFLECTIVE STRIPES SHALL BE ORANGE.

REV.	DATE	REVISION DESCRIPTION
3	8-2018	UPDATED SHEETING TYPE AND COLOR.
2	8-2015	UPDATED PER MUTCD AND FORM 816 JAN 2015 REVISION.
1	2-2011	MINOR REVISIONS.

THE INFORMATION, INCLUDING ESTIMATED QUANTITIES OF WORK, SHOWN ON THESE SHEETS IS BASED ON LIMITED INVESTIGATIONS BY THE STATE AND IS IN NO WAY WARRANTED TO INDICATE THE CONDITIONS OF ACTUAL QUANTITIES OF WORK WHICH WILL BE REQUIRED.

Plotted Date: 8/10/2018

NOT TO SCALE

STATE OF CONNECTICUT
DEPARTMENT OF TRANSPORTATION

Filename: TR-1220_02_3_2018.dgn Model: TR-1220_02

SUBMITTED BY: NAME/DATE/TIME: Mark F. Makuch, P.E. 2018.08.17 09:12:43-04'00'
APPROVED BY: NAME/DATE/TIME: Mark F. Carlino, P.E. 2018.08.21 07:49:51-04'00"

CTDOT STANDARD SHEET
OFFICE OF ENGINEERING

STANDARD SHEET TITLE:
CONSTRUCTION SIGN SUPPORTS AND CHANNELIZING DEVICES

STANDARD SHE
TR-122

No.	DATE	DESCRIPTION	DESIGNER	REVIEWER

STATE OF CONNECTICUT STEVEN E. AUDET No. 17623 LICENSED PROFESSIONAL ENGINEER

SEAL

SCALE: HORZ.: NOT TO SCALE VERT.:
DATUM: HORZ.: VERT.:

FUSS & O'NEILL
146 HARTFORD ROAD
MANCHESTER, CONNECTICUT 06040
860.646.2469
www.fando.com

CITY OF MERIDEN

GENERAL SITE DETAILS

BRIDGE REPLACEMENTS AND UTILITY IMPROVEMENTS
BUTLER STREET AND HANOVER STREET
MERIDEN CONNECTICUT

PROJ. No.: 20170932.C38
DATE: FEBRUARY 27, 2024

CD-120

File Path: J:\DWG\P2017\0932\C11\Civil\Plan\20170932C11_DET01.dwg, Layout: CD-120 (PHASE 1), Plotted: Tue, Feb 27, 2024 - 4:56 PM User: Shuffman
MS VIEW: LAYER STATE: PC3: AUTOCAD PDF (GENERAL DOCUMENTATION).PC3 STB/CTB: FO.STB

R1 - SERIES

R1-1 *

STOP

LEGEND - WHITE
BACKGROUND - RED

AREA (SQ. FT)	SIZE (INCHES)	CONN. D.O.T. #	POSTS	ALUM. THK.
1.85	18	31-0532	1	.080
5.19	30	31-0552	1	.080
7.98	36	31-0553	1	.080
13.3	48	31-0557	2	.100

R1-2 *

YIELD

LEGEND - RED
BACKGROUND -WHITE

AREA (SQ. FT)	SIZE (INCHES)	CONN. D.O.T. #	POSTS	ALUM. THK.
0.97	18	31-0520	1	.080
3.90	36	31-0523	1	.080
6.77	48	31-0522	2	.100
10.83	60	31-0528	2	.100

R1-3P *

ALL-WAY

LEGEND - WHITE
BACKGROUND - RED

AREA (SQ. FT)	SIZE (INCHES)	CONN. D.O.T. #	POSTS	ALUM. THK.
0.75	18X6	31-0508		.080

R2 - SERIES

R2-1

SPEED LIMIT 00

AREA (SQ. FT)	SIZE (INCHES)	CONN. D.O.T. #	POSTS	ALUM. THK.
5.00	24X30	31-5505	1	.080
7.50	30X36	31-5504	1	.080
12.00	36X48	31-5506	2	.100
20.00	48X60	31-5507	2	.100

R2-4a

SPEED LIMIT 00 MINIMUM 00

AREA (SQ. FT)	SIZE (INCHES)	CONN. D.O.T. #	POSTS	ALUM. THK.
32	48X96	31-5510	2	.125

R3 - SERIES

R3-1

LEGEND - BLACK
BACKGROUND - WHITE
CIRCLE & DIAGONAL - RED

AREA (SQ. FT)	SIZE (INCHES)	CONN. D.O.T. #	POSTS	ALUM. THK.
4.00	24X24	31-1604	1	.080
9.00	36X36	31-1627	2	.080

R3-2

LEGEND - BLACK
BACKGROUND - WHITE
CIRCLE & DIAGONAL - RED

AREA (SQ. FT)	SIZE (INCHES)	CONN. D.O.T. #	POSTS	ALUM. THK.
4.00	24X24	31-1603	1	.080
9.00	36X36	31-1629	2	.080

R3-3

NO TURNS

AREA (SQ. FT)	SIZE (INCHES)	CONN. D.O.T. #	POSTS	ALUM. THK.
4.00	24X24	31-1648	1	.080
9.00	36X36	31-1647	2	.080

R3-4

LEGEND - BLACK
BACKGROUND - WHITE
CIRCLE & DIAGONAL - RED

AREA (SQ. FT)	SIZE (INCHES)	CONN. D.O.T. #	POSTS	ALUM. THK.
4.00	24X24	31-1622	1	.080
9.00	36X36	31-1632	2	.080

R3-5

ONLY ONLY
31-0183 31-0184

AREA (SQ. FT)	SIZE (INCHES)	CONN. D.O.T. #	POSTS	ALUM. THK.
7.50	30X36		1	.080

R3-6

AREA (SQ. FT)	SIZE (INCHES)	CONN. D.O.T. #	POSTS	ALUM. THK.
7.50	30X36		1	.080

31-0157 31-0158

R3-7

LEFT LANE MUST TURN LEFT

AREA (SQ. FT)	SIZE (INCHES)	CONN. D.O.T. #	POSTS	ALUM. THK.
6.25	30X30	31-0117	1	.080
9.00	36X36	31-0120	2	.080

RIGHT LANE MUST TURN RIGHT

AREA (SQ. FT)	SIZE (INCHES)	CONN. D.O.T. #	POSTS	ALUM. THK.
6.25	30X30	31-0118	1	.080
9.00	36X36	31-0123	2	.080

R3-8

ONLY ONLY

AREA (SQ. FT)	SIZE (INCHES)	CONN. D.O.T. #	POSTS	ALUM. THK.
7.50	36X30	31-0290	1	.080

ONLY ONLY
31-0222 31-0223

AREA (SQ. FT)	SIZE (INCHES)	CONN. D.O.T. #	POSTS	ALUM. THK.
6.25	30X30		1	.080

ONLY ONLY
31-0262 31-0261

AREA (SQ. FT)	SIZE (INCHES)	CONN. D.O.T. #	POSTS	ALUM. THK.
6.25	30X30		1	.080

R3-8

ONLY ONLY
31-0282 31-0283

AREA (SQ. FT)	SIZE (INCHES)	CONN. D.O.T. #	POSTS	ALUM. THK.
7.50	36X30		2	.080

ONLY ONLY
31-0295 31-0219

AREA (SQ. FT)	SIZE (INCHES)	CONN. D.O.T. #	POSTS	ALUM. THK.
7.50	36X30		2	.080

ONLY

AREA (SQ. FT)	SIZE (INCHES)	CONN. D.O.T. #	POSTS	ALUM. THK.
8.75	42X30	31-0279	2	.100

R3-8b

ONLY ONLY

AREA (SQ. FT)	SIZE (INCHES)	CONN. D.O.T. #	POSTS	ALUM. THK.
10.00	48X30	31-0302	2	.100

ONLY ONLY
31-0307 31-0372

AREA (SQ. FT)	SIZE (INCHES)	CONN. D.O.T. #	POSTS	ALUM. THK.
10.00	48X30		2	.100

ONLY

AREA (SQ. FT)	SIZE (INCHES)	CONN. D.O.T. #	POSTS	ALUM. THK.
8.75	42X30	31-0334	2	.100

ONLY ONLY
31-0370 31-0371

AREA (SQ. FT)	SIZE (INCHES)	CONN. D.O.T. #	POSTS	ALUM. THK.
8.75	42X30		2	.100

R4 - SERIES

R4-1

DO NOT PASS

AREA (SQ. FT)	SIZE (INCHES)	CONN. D.O.T. #	POSTS	ALUM. THK.
5.00	24X30	31-1502	1	.080

R4-16

KEEP RIGHT EXCEPT TO PASS

AREA (SQ. FT)	SIZE (INCHES)	CONN. D.O.T. #	POSTS	ALUM. THK.
20.00	48X60	31-1574	2	.100

R4-3

SLOWER TRAFFIC KEEP RIGHT

AREA (SQ. FT)	SIZE (INCHES)	CONN. D.O.T. #	POSTS	ALUM. THK.
5.00	24X30	31-1562	1	.080
20.00	48X60	31-1564	2	.100

R4-7

AREA (SQ. FT)	SIZE (INCHES)	CONN. D.O.T. #	POSTS	ALUM. THK.
5.00	24X30	31-1526	1	.080
12.00	36X48	31-1536	2	.100
20.00	48X60	31-1546	2	.100

R5 - SERIES

R5-1 *

DO NOT ENTER

LEGEND - WHITE
BACKGROUND - WHITE
CIRCLE - RED

AREA (SQ. FT)	SIZE (INCHES)	CONN. D.O.T. #	POSTS	ALUM. THK.
6.25	30X30	31-1119	1	.080
9.00	36X36	31-1120	2	.080
16.00	48X48	31-1121	2	.100

R5-10a(CT)

NO PEDESTRIANS BICYCLES MOTOR BIKES MOTOR SCOOTERS

AREA (SQ. FT)	SIZE (INCHES)	CONN. D.O.T. #	POSTS	ALUM. THK.
9.00	36X36	31-1775	2	.100

R5-1a *

WRONG WAY

LEGEND - WHITE
BACKGROUND - RED

AREA (SQ. FT)	SIZE (INCHES)	CONN. D.O.T. #	POSTS	ALUM. THK.
6.00	36X24	31-1122	2	.080
8.75	42X30	31-1123	2	.100

R5-11

AUTHORIZED VEHICLES ONLY

AREA (SQ. FT)	SIZE (INCHES)	CONN. D.O.T. #	POSTS	ALUM. THK.
5.00	30X24	31-1790	1	.080
20.00	48X36	31-1792	2	.100

R5-10a(CT)

PROHIBITED
VEH OVER 8FT HIGH
TRAILERS
COMMERCIAL VEH
.08

LEGEND - BLACK
TOP SECTION BACKGROUND - YELLOW
BOTTON SECTION BACKGROUND - WHITE

AREA (SQ. FT)	SIZE (INCHES)	CONN. D.O.T. #	POSTS	ALUM. THK.
32.50	60X78	31-1719	2	.125

R5-10c

NO PEDESTRIANS

AREA (SQ. FT)	SIZE (INCHES)	CONN. D.O.T. #	POSTS	ALUM. THK.
2.00	24X12	31-1774	1	.080

R6 - SERIES

R6-1 *

ONE WAY

AREA (SQ. FT)	SIZE (INCHES)	CONN. D.O.T. #	POSTS	ALUM. THK.
3.00	36X12	31-1188	1	.080
6.75	54X18	31-1189	2	.100

R6-1 *

ONE WAY

AREA (SQ. FT)	SIZE (INCHES)	CONN. D.O.T. #	POSTS	ALUM. THK.
3.00	36X12	31-1177	1	.080
6.75	54X18	31-1178	2	.100

R7 - SERIES

R7-1

NO PARKING ANY TIME
(R) (L)
(D)

LEGEND - RED
BACKGROUND - WHITE

AREA (SQ. FT)	SIZE (INCHES)	CONN. D.O.T. #	POSTS	ALUM. THK.
1.50	12X18	31-0630	1	.080

R7-2a

NO PARKING 0:00 AM TO 0:00 PM
VARIABLE TIMES
(R) (L)
(D)

LEGEND - RED
BACKGROUND - WHITE

AREA (SQ. FT)	SIZE (INCHES)	CONN. D.O.T. #	POSTS	ALUM. THK.
1.50	12X18	31-0603	1	.080

R8 - SERIES

R8-7

EMERGENCY STOPPING ONLY

AREA (SQ. FT)	SIZE (INCHES)	CONN. D.O.T. #	POSTS	ALUM. THK.
12.00	48X36	31-0670	2	.100

R9 - SERIES

R9-3

LEGEND - BLACK
BACKGROUND - WHITE
CIRCLE & DIAGONAL - RED

AREA (SQ. FT)	SIZE (INCHES)	CONN. D.O.T. #	POSTS	ALUM. THK.
2.25	18X18	31-1705	1	.080
4.00	24x24	31-1769	1	.080
6.25	30x30	31-1770	1	.080

R9-3a

NO PEDESTRIAN CROSSING

AREA (SQ. FT)	SIZE (INCHES)	CONN. D.O.T. #	POSTS	ALUM. THK.
1.50	12X18	31-1702	1	.080

R10 - SERIES

R10-6

STOP HERE ON RED
31-0801

STOP HERE ON RED
31-0802

AREA (SQ. FT)	SIZE (INCHES)	CONN. D.O.T. #	POSTS	ALUM. THK.
6.00	24X36		1	.080

R10-7

DO NOT BLOCK INTERSECTION

AREA (SQ. FT)	SIZE (INCHES)	CONN. D.O.T. #	POSTS	ALUM. THK.
5.00	24X30	31-0806	1	.080

R10-11b

NO TURN ON RED

AREA (SQ. FT)	SIZE (INCHES)	CONN. D.O.T. #	POSTS	ALUM. THK.
9.00	36X36	31-0816	2	.080

R10-10L

LEFT TURN SIGNAL

AREA (SQ. FT)	SIZE (INCHES)	CONN. D.O.T. #	POSTS	ALUM. THK.
7.50	30X36	31-0852	1	.080

R10-11a

NO TURN ON RED

AREA (SQ. FT)	SIZE (INCHES)	CONN. D.O.T. #	POSTS	ALUM. THK.
7.50	30X36	31-0830	1	.080
12.00	36X48	31-0819	2	.100

R10-11c(CT)

RIGHT TURN ON RED FROM RIGHT LANE ONLY

AREA (SQ. FT)	SIZE (INCHES)	CONN. D.O.T. #	POSTS	ALUM. THK.
7.50	30X36	31-0847	1	.080

R10-15 *

TURNING VEHICLES YIELD TO
31-1626 31-1625

LEGEND AND SYMBOLS - BLACK
YIELD SYMBOL - RED
BACKGROUNDS
TOP - FLUORESCENT YELLOW-GREEN
BOTTOM - WHITE

AREA (SQ. FT)	SIZE (INCHES)	CONN. D.O.T. #	POSTS	ALUM. THK.
6.25	30X30		1	.080

R11 - SERIES

R11-1

KEEP OFF MEDIAN

AREA (SQ. FT)	SIZE (INCHES)	CONN. D.O.T. #	POSTS	ALUM. THK.
5.00	24X30	31-1915	1	.080
20.00	48X60	31-1918	2	.100

RETROREFLECTIVE STRIP

LEGEND - N/A
BACKGROUND - RED

AREA (SQ. FT)	SIZE (INCHES)	CONN. D.O.T. #	POSTS	ALUM. THK.
1.00	4X48	31-5003	1	.080
2.00	4X72	31-5004	1	.080

NOTES:

1. THE LEGEND "O.S.T.A." SHALL APPEAR ON ALL R- SERIES SIGNS EXCEPT WHEN SUFFIXED WITH THE LETTER "Z".
2. FOR SPECIFIC SIGN DESIGN CONTACT CONN. D.O.T., DIVISION OF TRAFFIC ENGINEERING. FOR BOLT HOLE PATTERN REFER TO FHWA PUBLICATION "STANDARD HIGHWAY SIGNS". SIGNS OF DIFFERENT DIMENSIONS TO BE ERECTED ON THE SAME POSTS, OR SPAN/MAST ARM MOUNTED, MAY REQUIRE SPECIAL BOLT HOLE PATTERNS.
3. POSTS - SEE STANDARD SHEET TR-1208_02 - "METAL SIGN POSTS AND SIGN MOUNTING DETAILS."
4. POSTS SHALL BE 4 LBS./FT.
5. SIGNS SHALL BE FABRICATED OF ONE CONTINUOUS PIECE OF SHEET ALUMINUM. SPLICING OF SHEET ALUMINUM WILL NOT BE ACCEPTED.
6. FOR OVERHEAD MOUNTED SIGNS, SEE STANDARD SHEET TR-1114_01 - "BONDING AND UTILITY POLE ATTACHMENT DETAILS, SIGN HANGER, "Y" CLAMP DETAIL."

COLORS:

BACKGROUND - WHITE - EXCEPT AS NOTED.
LEGEND - BLACK - EXCEPT AS NOTED.
ALL SIGNS TO USE TYPE IX RETROREFLECTIVE SHEETING WITH THE EXCEPTION OF OVERHEAD MOUNTED SIGNS AND SIGNS DESIGNATED WITH AN * WHICH SHALL BE TYPE XI RETROREFLECTIVE SHEETING.

REV.	DATE	REVISION DESCRIPTION	SHEET NO.
4	10-2021	REVISED SHEETING TYPE	TR-GS_01
3	12-2018	REVISED RETROREFLECTIVE STRIPS	TR-GS_01
2	10-2018	REVISED R5-11 SIGNS PER MUTCD	TR-GS_01
1	6-2018	NEW SHEET ISSUED	TR-GS_01

THE INFORMATION, INCLUDING ESTIMATED QUANTITIES OF WORK, SHOWN ON THESE SHEETS IS BASED ON LIMITED INVESTIGATIONS BY THE STATE AND IS IN NO WAY WARRANTED TO INDICATE THE CONDITIONS OF ACTUAL QUANTITIES OF WORK WHICH WILL BE REQUIRED.

Plotted Date: 10/14/2021

DESIGNER/DRAFTER: A. MERMELSTEIN
CHECKED BY: B. SCHILLING

NOT TO SCALE

STATE OF CONNECTICUT
DEPARTMENT OF TRANSPORTATION

Filename: ...\CTDOT_TRAFFIC_GS.dgn

SIGNATURE/BLOCK: OFFICE OF ENGINEERING
APPROVED BY: DATE:

PROJECT TITLE: -

TOWN: -

DRAWING TITLE: SIGN FACE SHEET ALUMINUM (X)
R-SERIES TYPICAL SIGN DETAILS

PROJECT NO. -
DRAWING NO. TR-GS_01
SHEET NO.

No.	DATE	DESCRIPTION	DESIGNER	REVIEWER

SEAL

STATE OF CONNECTICUT DEAN E. AUDET No. 17683 LICENSED PROFESSIONAL ENGINEER

SCALE: HORZ.: NOT TO SCALE VERT.:
DATUM: HORZ.: VERT.:

FUSS & O'NEILL
146 HARTFORD ROAD
MANCHESTER, CONNECTICUT 06040
860.646.2469
www.fando.com

CITY OF MERIDEN

GENERAL SITE DETAILS

BRIDGE REPLACEMENTS AND UTILITY IMPROVEMENTS
BUTLER STREET AND HANOVER STREET
MERIDEN CONNECTICUT

PROJ. No.: 20170932.C38
DATE: FEBRUARY 27, 2024

CD-121

File Path: J:\DWG\P2017\0932\C11\Civil\Plan\20170932C11_DET01.dwg, Layout: CD-121 (PHASE 1), Plotted: Tue, Feb 27, 2024 - 4:56 PM User: SHuffman
PC3: AUTOCAD PDF (GENERAL DOCUMENTATION).PC3 STB/CTB: FO.STB
LAYER STATE:
MS VIEW:

E5 - SERIES

E5-1 — EXIT

COPY & BORDER - WHITE
BACKGROUND - GREEN

AREA (SQ. FT)	SIZE (INCHES)	CONN. D.O.T. #	POSTS
16.0	48	51-6147	2

16 - SERIES

CONSTRUCTION AHEAD
ROAD USE RESTRICTED
STATE LIABILITY LIMITED
GENERAL STATUTES SEC 13a-115, 13a-145
COMMISSIONER OF TRANSPORTATION

	AREA (SQ. FT)	SIZE (INCHES)	CONN. D.O.T. #	POSTS
16-M	5.0	30X24	80-1613	1
16-H	17.5	60X42	80-1608	2
16-E	35.0	84X60	80-1605	2

CONSTRUCTION AHEAD
SIDEWALK USE RESTRICTED
STATE LIABILITY LIMITED
GENERAL STATUTES SEC 13a-115, 13a-145
COMMISSIONER OF TRANSPORTATION

	AREA (SQ. FT)	SIZE (INCHES)	CONN. D.O.T. #	POSTS
16-S	10.0	48X30	80-1619	2

G20 - SERIES

G20-2a — END ROAD WORK

AREA (SQ. FT)	SIZE (INCHES)	CONN. D.O.T. #	POSTS
8.0	48X24	80-9612	2

ROAD WORK NEXT 0 MILE(S) BE PREPARED TO STOP

VARIABLE MILEAGE

AREA (SQ. FT)	SIZE (INCHES)	CONN. D.O.T. #	POSTS
90.0	120X108	80-9728	

WORK AREA BE PREPARED TO STOP

AREA (SQ. FT)	SIZE (INCHES)	CONN. D.O.T. #	POSTS
9.0	36	80-9711	1
16.0	48	80-9712	2

NEXT 0 MILES

VARIABLE MILEAGE

AREA (SQ. FT)	SIZE (INCHES)	CONN. D.O.T. #	POSTS
7.0	72X14	80-9720	

BUSINESS ACCESS

VARIABLE ARROW
COPY & BORDER - WHITE
BACKGROUND - BLUE

AREA (SQ. FT)	SIZE (INCHES)	CONN. D.O.T. #	POSTS
9.0	36	50-5934	2

M4 - SERIES

M4-8 — DETOUR

AREA (SQ. FT)	SIZE (INCHES)	CONN. D.O.T. #	POSTS
2.0	24X12	80-9707	1

M4-9b — DETOUR

VARIABLE ARROW

AREA (SQ. FT)	SIZE (INCHES)	CONN. D.O.T. #	POSTS
5.0	30X24	80-9703	1

M4-8a — END DETOUR

AREA (SQ. FT)	SIZE (INCHES)	CONN. D.O.T. #	POSTS
3.0	24X18	80-9708	1

M4-9b — DETOUR

VARIABLE ARROW

AREA (SQ. FT)	SIZE (INCHES)	CONN. D.O.T. #	POSTS
6.25	30X30	80-9706	1

M4-10 — (R) DETOUR / (L) DETOUR

AREA (SQ. FT)	SIZE (INCHES)	CONN. D.O.T. #	POSTS
6.0	48X18	80-9701R	2
6.0	48X18	80-9702L	2

DETOUR

VARIABLE ARROW

AREA (SQ. FT)	SIZE (INCHES)	CONN. D.O.T. #	POSTS
5.0	30X24	80-9710	1

R1 - SERIES

R1-1 — STOP

COPY & BORDER - WHITE
BACKGROUND - RED

AREA (SQ. FT)	SIZE (INCHES)	CONN. D.O.T. #	POSTS
5.19	30	31-0552	1
13.30	48	31-0557	2

R1-2 — YIELD

COPY & BORDER - RED
BACKGROUND - WHITE

AREA (SQ. FT)	SIZE (INCHES)	CONN. D.O.T. #	POSTS
3.90	36	31-0523	1
10.83	60	31-0528	2

R4 - SERIES

R4-7

COPY & BORDER - BLACK
BACKGROUND - WHITE

AREA (SQ. FT)	SIZE (INCHES)	CONN. D.O.T. #	POSTS
5.0	24X30	31-1526	1

R4-9 — STAY IN LANE

COPY & BORDER - BLACK
BACKGROUND - WHITE

AREA (SQ. FT)	SIZE (INCHES)	CONN. D.O.T. #	POSTS
5.0	24X30	31-1517	1
12.0	36X48	31-1518	1
20.0	48X60	31-1519	2

R9 & R11 - SERIES

R9-9 — SIDEWALK CLOSED

COPY & BORDER - BLACK
BACKGROUND - WHITE

AREA (SQ. FT)	SIZE (INCHES)	CONN. D.O.T. #	POSTS
3.75	30X18	80-9076	1

R11-3a — ROAD CLOSED 00 MILES AHEAD LOCAL TRAFFIC ONLY

VARIABLE MILEAGE
COPY & BORDER - BLACK
BACKGROUND - WHITE

AREA (SQ. FT)	SIZE (INCHES)	CONN. D.O.T. #	POSTS
12.5	60X30	80-9077	2

R9-11 — SIDEWALK CLOSED AHEAD → CROSS HERE

VARIABLE ARROW
COPY & BORDER - BLACK
BACKGROUND - WHITE

AREA (SQ. FT)	SIZE (INCHES)	CONN. D.O.T. #	POSTS
3.0	24X18	80-9074	1

R11-3b — BRIDGE CLOSED 00 MILES AHEAD LOCAL TRAFFIC ONLY

VARIABLE MILEAGE
COPY & BORDER - BLACK
BACKGROUND - WHITE

AREA (SQ. FT)	SIZE (INCHES)	CONN. D.O.T. #	POSTS
12.5	60X30	80-9078	2

R9-11a — SIDEWALK CLOSED → CROSS HERE

VARIABLE ARROW
COPY & BORDER - BLACK
BACKGROUND - WHITE

AREA (SQ. FT)	SIZE (INCHES)	CONN. D.O.T. #	POSTS
2.0	24X12	80-9075	1

R11-3b — ROAD CLOSED TO THRU TRAFFIC

COPY & BORDER - BLACK
BACKGROUND - WHITE

AREA (SQ. FT)	SIZE (INCHES)	CONN. D.O.T. #	POSTS
12.5	60X30	80-9081	2

R11-2 — ROAD CLOSED

COPY & BORDER - BLACK
BACKGROUND - WHITE

AREA (SQ. FT)	SIZE (INCHES)	CONN. D.O.T. #	POSTS
10.0	48X30	80-9080	2

ROAD WORK AHEAD FINES DOUBLED

COPY & BORDER - BLACK
BACKGROUND - WHITE

AREA (SQ. FT)	SIZE (INCHES)	CONN. D.O.T. #	POSTS
14.0	48X42	31-1906	2
22.5	60X54	31-1907	2

W1 - SERIES

W1-4 — (L) (R)

AREA (SQ. FT)	SIZE (INCHES)	CONN. D.O.T. #	POSTS
9.0	36	80-9432L	1
9.0	36	80-9431R	1
16.0	48	80-9452L	2
16.0	48	80-9451R	2

W1-6 — (L or R)

AREA (SQ. FT)	SIZE (INCHES)	CONN. D.O.T. #	POSTS
8.0	48X24	80-9424	2
12.5	60X30	80-9423	2

W1-8

AREA (SQ. FT)	SIZE (INCHES)	CONN. D.O.T. #	POSTS
3.0	18X24	80-9401	1
5.0	24X30	80-9403	1
7.5	30X36	80-9404	1

BOTH LANES SHIFT LEFT AHEAD — (L)
BOTH LANES SHIFT RIGHT AHEAD — (R)

AREA (SQ. FT)	SIZE (INCHES)	CONN. D.O.T. #	POSTS
16.0	48	80-9433L	2
16.0	48	80-9435R	2

AHEAD — (L) AHEAD — (R)

AREA (SQ. FT)	SIZE (INCHES)	CONN. D.O.T. #	POSTS
25.0	60	80-9483L	2
25.0	60	80-9485R	2

BOTH LANES SHIFT LEFT — (L)
BOTH LANES SHIFT RIGHT — (R)

AREA (SQ. FT)	SIZE (INCHES)	CONN. D.O.T. #	POSTS
16.0	48	80-9434L	2
16.0	48	80-9436R	2

W1-4c — (L) (R)

AREA (SQ. FT)	SIZE (INCHES)	CONN. D.O.T. #	POSTS
25.0	60	80-9484L	2
25.0	60	80-9486R	2

AHEAD — (L) AHEAD — (R)

AREA (SQ. FT)	SIZE (INCHES)	CONN. D.O.T. #	POSTS
25.0	60	80-9443L	2
25.0	60	80-9445R	2

W1-4b — (L) (R)

AREA (SQ. FT)	SIZE (INCHES)	CONN. D.O.T. #	POSTS
25.0	60	80-9444L	2
25.0	60	80-9446R	2

W3 - SERIES

W3-1

OCTAGON - RED W/ WHITE BORDER
ARROW & BORDER - BLACK
BACKGROUND - FLUORESCENT ORANGE

AREA (SQ. FT)	SIZE (INCHES)	CONN. D.O.T. #	POSTS
9.0	36	80-9050	1
16.0	48	80-9051	2

W3-2

TRIANGLE - RED W/ WHITE BORDER
ARROW & BORDER - BLACK
BACKGROUND - FLUORESCENT ORANGE

AREA (SQ. FT)	SIZE (INCHES)	CONN. D.O.T. #	POSTS
9.0	36	80-9054	1
16.0	48	80-9055	2

W3-3

TOP CIRCLE - RED
MIDDLE CIRCLE - YELLOW
BOTTOM CIRCLE - GREEN
COPY & BORDER - BLACK
BACKGROUND - FLUORESCENT ORANGE

AREA (SQ. FT)	SIZE (INCHES)	CONN. D.O.T. #	POSTS
9.0	36	80-9052	1
16.0	48	80-9053	2

W4-W6 - SERIES

W4-2 — (L) (R)

AREA (SQ. FT)	SIZE (INCHES)	CONN. D.O.T. #	POSTS
16.0	48	80-9918L	2
16.0	48	80-9917R	2

W6-3

AREA (SQ. FT)	SIZE (INCHES)	CONN. D.O.T. #	POSTS
16.0	48	80-9945	2

W8-W9 - SERIES

W8-1 — BUMP

AREA (SQ. FT)	SIZE (INCHES)	CONN. D.O.T. #	POSTS
9.0	36	80-9901	1
16.0	48	80-9902	2

BUMP AHEAD

AREA (SQ. FT)	SIZE (INCHES)	CONN. D.O.T. #	POSTS
9.0	36	80-9801	1
16.0	48	80-9802	2

W9-2 — LANE ENDS MERGE LEFT (L) / LANE ENDS MERGE RIGHT (R)

AREA (SQ. FT)	SIZE (INCHES)	CONN. D.O.T. #	POSTS
16.0	48	80-9910L	2
16.0	48	80-9911R	2

W13 - SERIES

W13-1 — 00 M.P.H.

SUBPLATE
VARIABLE SPEED

AREA (SQ. FT)	SIZE (INCHES)	CONN. D.O.T. #	POSTS
4.0	24	80-9569	1
6.25	30	80-9567	1

REDUCE SPEED TO 00 MPH

VARIABLE SPEED

AREA (SQ. FT)	SIZE (INCHES)	CONN. D.O.T. #	POSTS
9.0	36	80-9506	1
16.0	48	80-9508	2

W3-5 — SPEED LIMIT 00

VARIABLE SPEED

AREA (SQ. FT)	SIZE (INCHES)	CONN. D.O.T. #	POSTS
9.0	36	80-9520	1
16.0	48	80-9521	2

W-16 - SERIES

W16-15P — NEW

COPY & BORDER - BLACK
BACKGROUND - ORANGE

AREA (SQ. FT)	SIZE (INCHES)	CONN. D.O.T. #	POSTS
2.0	24X12	80-9049	

W20 - SERIES

W20-1 — ROAD WORK AHEAD

AREA (SQ. FT)	SIZE (INCHES)	CONN. D.O.T. #	POSTS
6.25	30	80-9602	1
9.0	36	80-9603	1
16.0	48	80-9604	2

LEFT LANES CLOSED (L) / RIGHT LANES CLOSED (R)

	AREA (SQ. FT)	SIZE (INCHES)	CONN. D.O.T. #	POSTS
(L)	16.0	48	80-9836	2
(R)	16.0	48	80-9839	2

W20-7a

AREA (SQ. FT)	SIZE (INCHES)	CONN. D.O.T. #	POSTS
9.0	36	80-9803	1
16.0	48	80-9804	2

W20-1 — ROAD WORK 0000 FT

VARIABLE DISTANCE

AREA (SQ. FT)	SIZE (INCHES)	CONN. D.O.T. #	POSTS
9.0	36	80-9614	1
16.0	48	80-9615	2

LEFT TWO LANES CLOSED AHEAD (L) / RIGHT TWO LANES CLOSED AHEAD (R)

	AREA (SQ. FT)	SIZE (INCHES)	CONN. D.O.T. #	POSTS
(L)	16.0	48	80-9837	2
(R)	16.0	48	80-9838	2

SLOW MOVING TRUCKS AHEAD

AREA (SQ. FT)	SIZE (INCHES)	CONN. D.O.T. #	POSTS
32.0	96X48	80-9815	2

W20-2 — DETOUR 1000 FT

AREA (SQ. FT)	SIZE (INCHES)	CONN. D.O.T. #	POSTS
9.0	36	80-9805	1
16.0	48	80-9806	2

LEFT LANE CLOSED AHEAD (L) / RIGHT LANE CLOSED AHEAD (R)

	AREA (SQ. FT)	SIZE (INCHES)	CONN. D.O.T. #	POSTS
(L)	16.0	48	80-9847	2
(R)	16.0	48	80-9848	2

W16-9P — AHEAD

AREA (SQ. FT)	SIZE (INCHES)	CONN. D.O.T. #	POSTS
2.0	24X12	80-9870	
3.75	30X18	80-9871	

ONE LANE ROAD AHEAD

AREA (SQ. FT)	SIZE (INCHES)	CONN. D.O.T. #	POSTS
9.0	36	80-9834	1
16.0	48	80-9835	2

LEFT LANE CLOSED (L) / RIGHT LANE CLOSED (R)

	AREA (SQ. FT)	SIZE (INCHES)	CONN. D.O.T. #	POSTS
(L)	16.0	48	80-9846	2
(R)	16.0	48	80-9849	2

W16-3aP — 1 MILE

VARIABLE MILEAGE

AREA (SQ. FT)	SIZE (INCHES)	CONN. D.O.T. #	POSTS
2.5	30X12	80-9872	
4.5	36X18	80-9873	

W21 - SERIES

W21-6 — SURVEY CREW

AREA (SQ. FT)	SIZE (INCHES)	CONN. D.O.T. #	POSTS
9.0	36	80-9607	1

W22 - SERIES

W22-1 — BLASTING ZONE 1000 FT

AREA (SQ. FT)	SIZE (INCHES)	CONN. D.O.T. #	POSTS
9.0	36	80-9620	1
16.0	48	80-9625	2

W22-2 — TURN OFF 2-WAY RADIO AND CELL PHONE

AREA (SQ. FT)	SIZE (INCHES)	CONN. D.O.T. #	POSTS
10.5	42X36	80-9623	2

W22-3 — END BLASTING ZONE

AREA (SQ. FT)	SIZE (INCHES)	CONN. D.O.T. #	POSTS
10.5	42X36	80-9621	2

(VARIABLE LEGEND)

AREA (SQ. FT)	SIZE (INCHES)	CONN. D.O.T. #	POSTS
4.17	60X10	80-9913	2
12.0	96X18	80-9914	2
3.33	48X10	80-9916	2

BLANK OR VARIABLE LEGEND

AREA (SQ. FT)	SIZE (INCHES)	CONN. D.O.T. #	POSTS
9.0	36	80-9933	1
16.0	48	80-9934	2

(VARIABLE LEGEND)

AREA (SQ. FT)	SIZE (INCHES)	CONN. D.O.T. #	POSTS
12.5	60X30	80-9928	2
24.0	72X48	80-9929	2

USE SHOULDER

AREA (SQ. FT)	SIZE (INCHES)	CONN. D.O.T. #	POSTS
16.0	48	80-9956	2

SHOULDER CLOSED AHEAD (1) / SHOULDER CLOSED (2)

	AREA (SQ. FT)	SIZE (INCHES)	CONN. D.O.T. #	POSTS
(1)	16.0	48	80-9957	2
(2)	9.0	36	80-9958	1
(2)	16.0	48	80-9959	2

STOP-SLOW PADDLE

SIDE A — STOP / SIDE B — SLOW

SIDE A
BACKGROUND - RED
COPY & BORDER - WHITE
SIDE B
BACKGROUND - ORANGE
COPY & BORDER - BLACK PLAIN

	AREA (SQ. FT)	SIZE (INCHES)	CONN. D.O.T. #	POSTS
	2.25	18	80-9950	PADDLE

NOTES:
1. R1-SERIES SIGN THE LEGEND "O.S.T.A." SHALL APPEAR.
2. POSTS - SEE STANDARD SHEET TR-1208_02 - "METAL SIGN POSTS AND SIGN MOUNTING DETAILS".
3. POSTS SHALL BE 4 LBS./FT.
4. ALL POSTS NOTED ARE FOR LONG TERM INSTALLATION. SEE STANDARD SHEET TR-1208_02.
5. FOR TEMPORARY SUPPORTS SEE STANDARD SHEET TR-1220_02 - "CONSTRUCTION SIGN SUPPORTS AND CHANNELIZING DEVICES".
6. FOR SPECIFIC SIGN DESIGN, CONTACT CONN. D.O.T., DIVISION OF TRAFFIC ENGINEERING. FOR BOLT HOLE PATTERN REFER TO FHWA PUBLICATION "STANDARD HIGHWAY SIGNS". SIGNS OF DIFFERENT DIMENSIONS TO BE ERECTED ON THE SAME POSTS, OR SPAN/MAST ARM MOUNTED, MAY REQUIRE SPECIAL BOLT HOLE PATTERNS.
7. ALL CONSTRUCTION SIGNS TO BE PAID FOR UNDER THE CONSTRUCTION SIGNS ITEM IN THE CONTRACT.
8. MATERIALS & COLORS SHALL CONFORM TO STATE SPECIFICATIONS.

MATERIALS:
SIGNS AND THEIR PORTABLE SUPPORTS SHALL CONFORM TO THE REQUIREMENTS OF NCHRP REPORT 350 (TL-3) OR THE AASHTO MASH FOR CATEGORY 2 DEVICES. ALUMINUM THICKNESS FOR POST MOUNTED SIGNS SHALL BE .100" EXCEPT SIGN #s. 80-1605, 80-9914, 80-9815, 80-9728, 80-9519, & 51-6147 (L OR R) WHICH SHALL BE .125", PLYWOOD THICKNESS FOR POST MOUNTED SIGNS SHALL BE 1/2" EXTERIOR GRADE A-C OR BETTER. SIGN BLANKS SHALL HAVE ONE COAT OF PRIMER PAINT PRIOR TO APPLICATION OF RETROREFLECTIVE SHEETING & COPY.

COLORS:
BACKGROUND - FLUORESCENT ORANGE - EXCEPT AS NOTED.
LEGEND - BLACK - EXCEPT AS NOTED.
ALL SIGNS WITH FLUORESCENT ORANGE BACKGROUND TO USE TYPE VIII RETROREFLECTIVE SHEETING.
ALL OTHER SIGNS TO USE TYPE IX RETROREFLECTIVE SHEETING.

REV.	DATE	REVISION DESCRIPTION
6	8-2018	REVISED POST REQUIREMENTS AND SHEETING TYPE.
5	8-2015	UPDATED PER MUTCD AND FORM 816 JAN 2015 REVISION.
4	6-2012	REVISED NOTE #1 TO REFERENCE "O.S.T.A."
3	4-2012	REVISED NEW SIGNAL SIGN(S) TO CONFORM TO 2009 MUTCD.
2	2-2011	MINOR REVISIONS.
1	3-2010	REMOVED OBSOLETE SIGNS (50-5925, 50-5935).

THE INFORMATION, INCLUDING ESTIMATED QUANTITIES OF WORK, SHOWN ON THESE SHEETS IS BASED ON LIMITED INVESTIGATIONS BY THE STATE AND IS IN NO WAY WARRANTED TO INDICATE THE CONDITIONS OF ACTUAL QUANTITIES OF WORK WHICH WILL BE REQUIRED.

Plotted Date: 8/10/2018

NOT TO SCALE

STATE OF CONNECTICUT
DEPARTMENT OF TRANSPORTATION

Filename: TR-1220_01_1_2018.dgn Model: TR-1220_01

SUBMITTED BY: NAME/DATE/TIME: Mark F. Makuch, P.E. 2018.08.17 09:11:08-04'00'
APPROVED BY: NAME/DATE/TIME: Mark F. Carlino, P.E. 2018.08.21 07:49:34-04'00'

CTDOT STANDARD SHEET
OFFICE OF ENGINEERING

STANDARD SHEET TITLE: SIGNS FOR CONSTRUCTION AND PERMIT OPERATIONS

STANDARD SHEET NO.: TR-1220_01

No.	DATE	DESCRIPTION	DESIGNER	REVIEWER

STATE OF CONNECTICUT — DEAN E. AUDET — No. 17621 — LICENSED PROFESSIONAL ENGINEER

SEAL

SCALE: HORZ.: NOT TO SCALE; VERT.:
DATUM: HORZ.: VERT.:

FUSS & O'NEILL
146 HARTFORD ROAD
MANCHESTER, CONNECTICUT 06040
860.646.2469
www.fando.com

CITY OF MERIDEN
GENERAL SITE DETAILS
BRIDGE REPLACEMENTS AND UTILITY IMPROVEMENTS
BUTLER STREET AND HANOVER STREET
MERIDEN CONNECTICUT

PROJ. No.: 20170932.C38
DATE: FEBRUARY 27, 2024
CD-122

File Path: J:\DWG\P2017\0932\C11\Civil\Plan\20170932C11_DET01.dwg, Layout: CD-122 (PHASE 1), Plotted: Tue, Feb 27, 2024 - 4:56 PM User: SHuffman
PC3: AUTOCAD PDF (GENERAL DOCUMENTATION).PC3 STB/CTB: FO.STB
LAYER STATE:
MS VIEW:

TYPICAL METAL SIGN POSTS

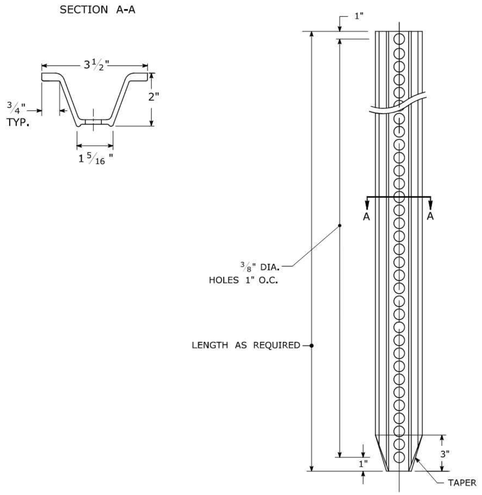

TYPICAL SIGN PANEL ATTACHMENT

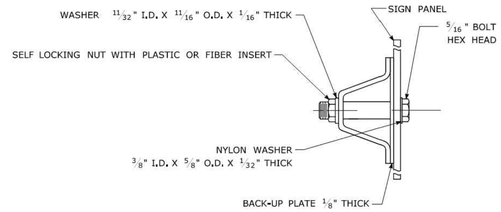

TYPICAL BACK TO BACK SIGN PANEL ATTACHMENT

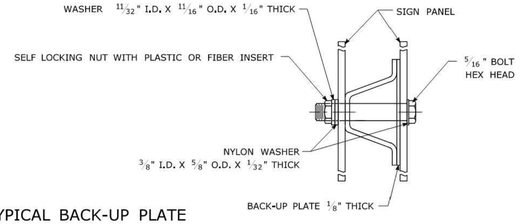

TYPICAL BACK-UP PLATE

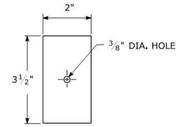

BOLTS - STAINLESS STEEL CONFORMING TO ASTM F593, ALLOY GROUP 1 OR 2 (ALLOY TYPES 304 OR 316).
SELF LOCKING NUTS - STAINLESS STEEL CONFORMING TO ASTM F594, ALLOY GROUP 1 OR 2 (ALLOY TYPES 304 OR 316).
WASHERS - STAINLESS STEEL CONFORMING TO ASTM A240, (ALLOY TYPES 304 OR 316).

METAL DELINEATOR POST

WT./FT. = 1.12 LBS./FT. MIN.

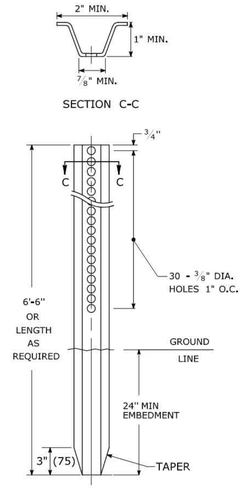

GENERAL NOTES:

1. STEEL FOR DELINEATOR POSTS SHALL BE ASTM A36 STEEL. STEEL FOR ALL OTHER POSTS SHALL CONFORM TO THE MECHANICAL REQUIREMENTS OF ASTM A 499 GRADE 80 AND TO THE CHEMICAL REQUIREMENTS OF ASTM A1 CARBON STEEL TEE RAIL HAVING NOMINAL WEIGHT (MASS) OF 91 LBS. OR GREATER PER LINEAR YARD.
2. AFTER FABRICATION, ALL STEEL POSTS, STRAPS AND PLATES SHALL BE GALVANIZED TO MEET THE REQUIREMENTS OF ASTM A123.
3. WASHERS FOR BREAKAWAY INSTALLATIONS SHALL MEET ASTM F436, TYPE 1.
4. SPACER BAR FOR BREAKAWAY INSTALLATION SHALL CONFORM TO THE MECHANICAL REQUIREMENTS OF ASTM A36.
5. ALL BOLTS, NUTS, AND WASHERS FOR BREAKAWAY INSTALLATIONS SHALL BE GALVANIZED TO MEET THE REQUIREMENTS OF ASTM A153.
6. ALL SIGN POSTS SHALL HAVE BREAKAWAY FEATURES THAT MEET AASHTO REQUIREMENTS CONTAINED IN THE CURRENT "STANDARD SPECIFICATIONS FOR STRUCTURAL SUPPORTS FOR HIGHWAY SIGNS, LUMINAIRES AND TRAFFIC SIGNALS." THE BREAKAWAY FEATURES SHALL BE STRUCTURALLY ADEQUATE TO CARRY THE SIGNS SHOWN IN THE PLANS AT 60 mph WIND LOADINGS. INSTALLATIONS SHALL BE IN ACCORDANCE WITH MANUFACTURERS RECOMMENDATIONS.
7. SIGN POSTS SHALL BE 4 LBS./FT.

BREAKAWAY INSTALLATION

FOR 4 LBS./FT. POSTS

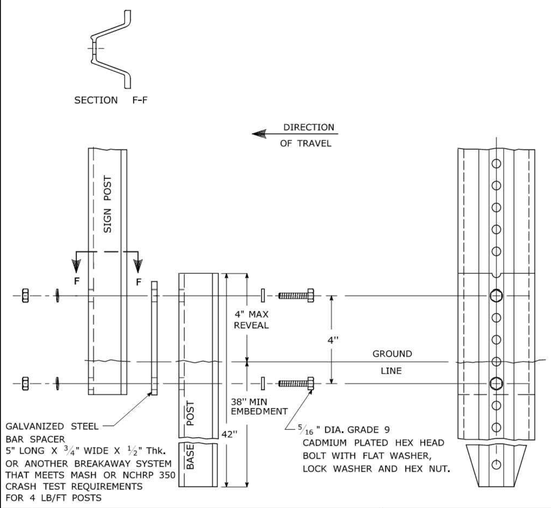

TYPICAL SIGN POST INSTALLATION IN LEDGE

LEDGE SHALL BE REMOVED TO DRIVE THE BASE POST TO A DEPTH OF 38".

HOLE SHALL BE FILLED WITH SUB-BASE MATERIAL AND COMPACTED WITH A TAMPING BAR, OR TECHNIQUE APPROVED BY THE ENGINEER, PRIOR TO BASE POST INSTALLATION.

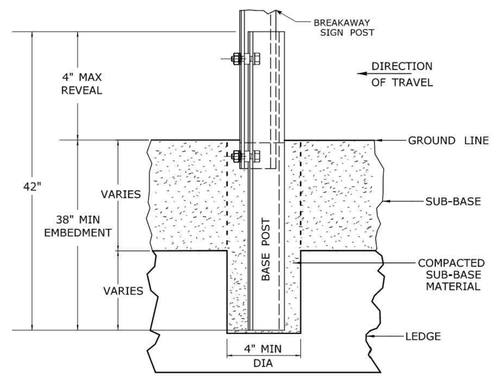

TYPICAL SLEEVE FOR PAVED AREAS

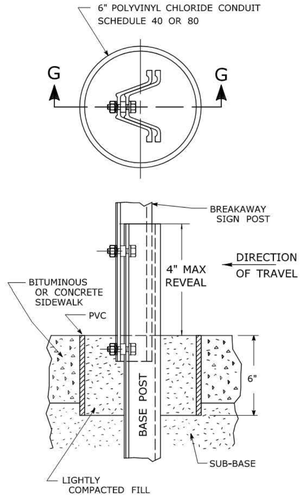

45° MOUNTING BRACKET FOR INSTALLATION OF PARKING SIGNS

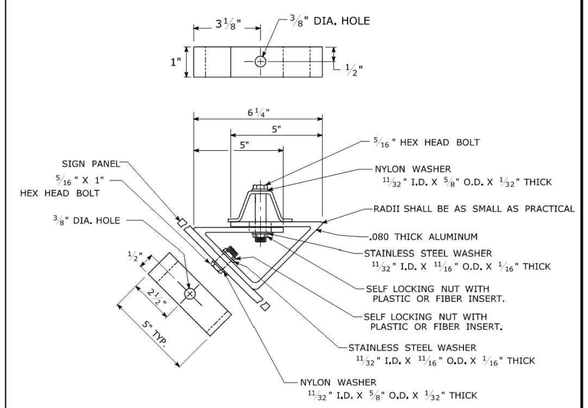

REV.	DATE	REVISION DESCRIPTION
2	6-2017	SIGN POST REVISIONS.
1	2-2011	MINOR REVISIONS.

THE INFORMATION, INCLUDING ESTIMATED QUANTITIES OF WORK, SHOWN ON THESE SHEETS IS BASED ON LIMITED INVESTIGATIONS BY THE STATE AND IS IN NO WAY WARRANTED TO INDICATE THE CONDITIONS OF ACTUAL QUANTITIES OF WORK WHICH WILL BE REQUIRED.

Plotted Date: 6/6/2017

NOT TO SCALE

STATE OF CONNECTICUT
DEPARTMENT OF TRANSPORTATION

Filename: TR-1208_02_May_2017_Revision.dgn Model: TR-1208_02

SUBMITTED BY:	NAME/DATE/TIME:
	Mark F. Makuch, P.E. 2017.06.07 07:30:30-04'00'
	Mary E. Baker, P.E. 2017.06.13 15:28:14-04'00'
APPROVED BY:	NAME/DATE/TIME:
	Gregory M. Dorosh, P.E. 2017.06.15 09:27:29-04'00'

CTDOT STANDARD SHEET

OFFICE OF ENGINEERING

STANDARD SHEET TITLE:

METAL SIGN POSTS AND SIGN MOUNTING DETAILS

GUIDE SHEET NO.: TR-1208_02

No.	DATE	DESCRIPTION	DESIGNER	REVIEWER

SEAL

STATE OF CONNECTICUT · DEAN E. AUDY · No. 17621 · LICENSED PROFESSIONAL ENGINEER

SCALE: HORZ.: NOT TO SCALE; VERT.:
DATUM: HORZ.: VERT.:

FUSS & O'NEILL
146 HARTFORD ROAD
MANCHESTER, CONNECTICUT 06040
860.646.2469
www.fando.com

CITY OF MERIDEN

GENERAL SITE DETAILS

BRIDGE REPLACEMENTS AND UTILITY IMPROVEMENTS
BUTLER STREET AND HANOVER STREET

MERIDEN CONNECTICUT

PROJ. No.: 20170932.C38
DATE: FEBRUARY 27, 2024

CD-123

File Path: J:\DWG\P2017\0932\C11\Civil\Plan\20170932C11_DET01.dwg, Layout: CD-123 (PHASE 1), Plotted: Tue, Feb 27, 2024 - 4:56 PM User: SHuffman
PC3: AUTOCAD PDF (GENERAL DOCUMENTATION).PC3 STB/CTB: FO.STB
LAYER STATE:
MS VIEW:

GENERAL NOTES:

1. J-HOOK BOLTS MAY BE SUBSTITUTED FOR BOTTOM PLATE ANCHORAGE IN CONCRETE END ANCHORS USING THE SAME SIZE, STRENGTH, AND LENGTH AS NOTED ON THE PLANS.
2. INSTALLATION OF RADII DIFFERENT THAN WHAT IS SHOWN IN DETAIL "C" FOR R-B END ANCHORAGE TYPE II MUST BE APPROVED BY THE ENGINEER.

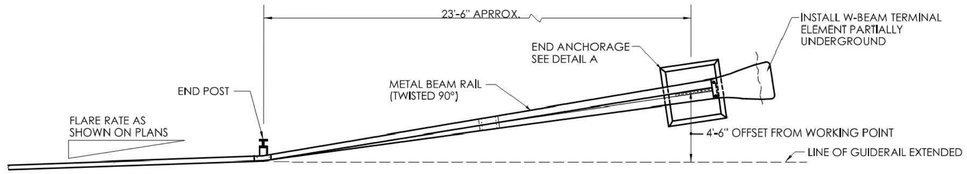

PLAN

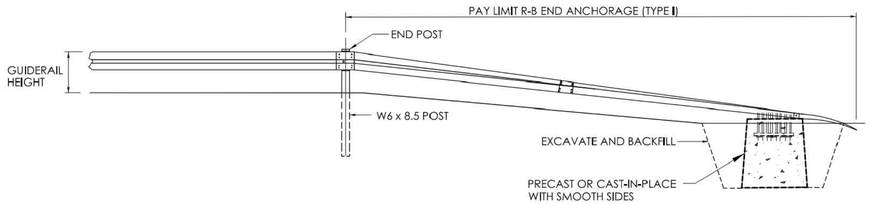

ELEVATION

R-B END ANCHORAGE TYPE I

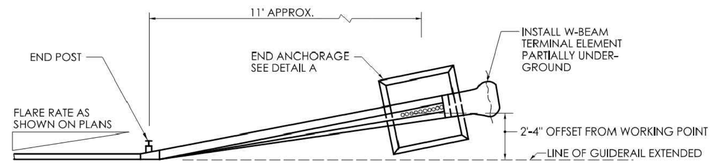

PLAN

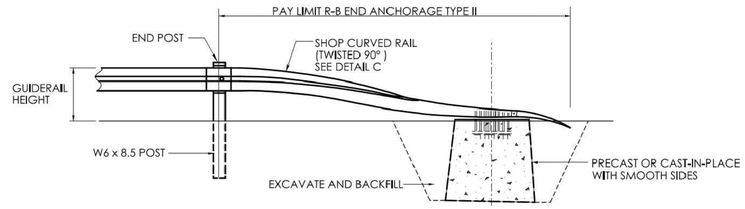

ELEVATION

R-B END ANCHORAGE TYPE II

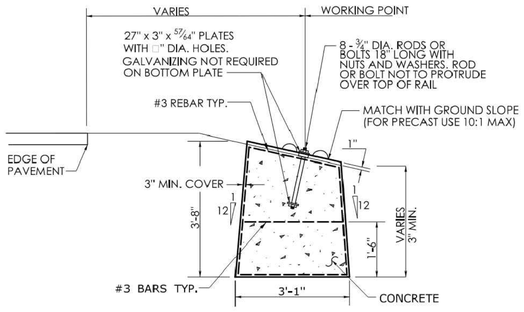

ELEVATION

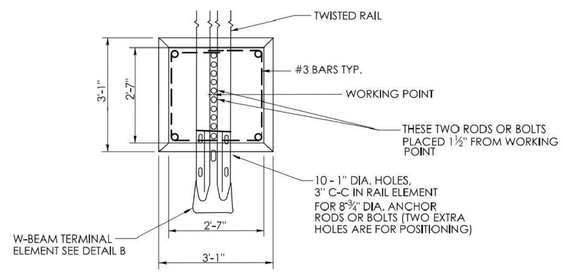

PLAN

DETAIL A
ROADSIDE CONCRETE END ANCHOR
SEE NOTE 2

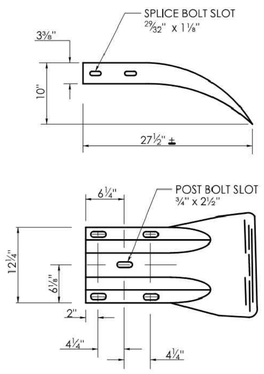

DETAIL B
W-BEAM TERMINAL ELEMENT

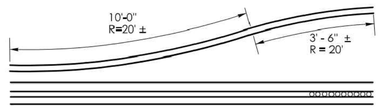

DETAIL C
SHOP CURVED RAIL
SEE NOTE 2

NOT TO SCALE	SIGNATURE BLOCK: OFFICE OF ENGINEERING 2800 BERLIN TURNPIKE NEWINGTON, CT 06111	SUBMITTED BY: Digitally signed by Leo Fontaine, P.E. Date: 2022.09.27 15:11:34-04'00'	APPROVED BY: Digitally signed by Calabrese, Michael Date: 2022.11.08 09:48:55-05'00'	STATE OF CONNECTICUT DEPARTMENT OF TRANSPORTATION

CTDOT STANDARD SHEET

STANDARD SHEET TITLE: **R-B END ANCHORAGE TYPE I AND II**

STANDARD SHEET NO.: **HW- 911_01**

PLOTTED DATE: 9/21/2022

No.	DATE	DESCRIPTION	DESIGNER	REVIEWER

STATE OF CONNECTICUT DEAN E. AUGER No. 17623 LICENSED PROFESSIONAL ENGINEER

SEAL

SCALE: HORZ.: NOT TO SCALE; VERT.:
DATUM: HORZ.: ; VERT.:

FUSS & O'NEILL
146 HARTFORD ROAD
MANCHESTER, CONNECTICUT 06040
860.646.2469
www.fando.com

CITY OF MERIDEN

GENERAL SITE DETAILS

BRIDGE REPLACEMENTS AND UTILITY IMPROVEMENTS
BUTLER STREET AND HANOVER STREET

MERIDEN CONNECTICUT

PROJ. No.: 20170932.C38
DATE: FEBRUARY 27, 2024

CD-124

File Path: J:\DWG\P20170932\C11\Civil\Plan\20170932C11_DET01.dwg, Layout: CD-124 (PHASE 1), Plotted: Tue, Feb 27, 2024 - 4:56 PM User: SHuffman
PC3: AUTOCAD PDF (GENERAL DOCUMENTATION).PC3 STB/CTB: FO.STB
LAYER STATE:
MS VIEW:

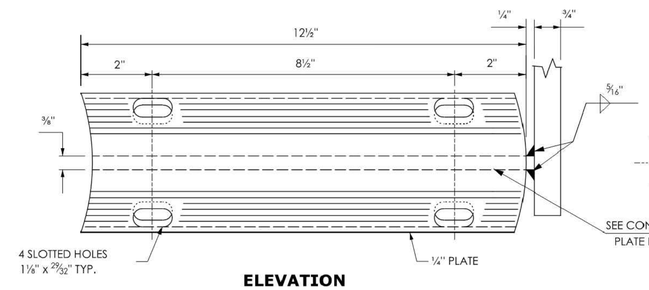

ELEVATION

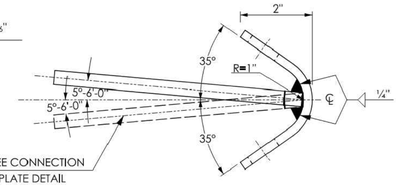

SIDE

BENT PLATE
(2 REQUIRED)

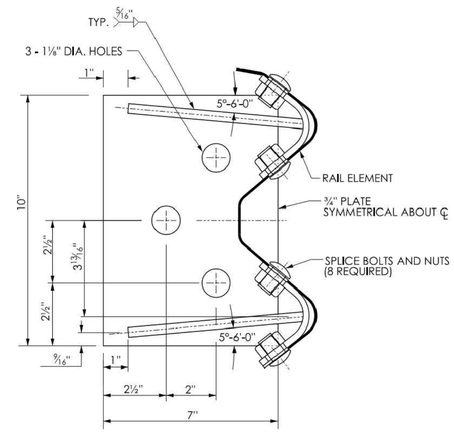

BASE PLATE AND ASSEMBLY

GENERAL NOTES:

1. SEE SHEET HW-910_20 FOR HARDWARE AND DELINEATOR DETAILS.
2. IF PROPOSED R-B MASH GUIDERAIL IS BEING ATTACHED TO A PARAPET USING EXISTING ANCHOR BOLTS FROM R-I GUIDERAIL INSTALLED AT A 33" RAIL OR RB-350 GUIDERAIL INSTALLED AT A 29" RAIL HEIGHT, THE 2" HEIGHT DIFFERENTIAL SHALL BE TRANSITION OVER 25'.
3. FOR EXISTING PARAPETS, USE THREE 1" DIA. x 14" LONG, FULLY THREADED, ADHESIVE BONDED ANCHORED BOLTS AND WASHERS WITH 12" EMBEDMENT DEPTH OR AS RECOMMENDED BY MANUFACTURER OF BONDING MATERIAL TO OBTAIN FULL STRENGTH OF ANCHOR BOLTS. FOR ANCHORAGE IN NEW PARAPETS, SEE STRUCTURE SHEETS.
4. TRAILING END ATTACHMENT MAY ALSO BE INSTALLED AT A VERTICAL FACE PARAPET OR RETAINING WALL ON ONE-WAY ROADWAYS ONLY.
5. MINIMUM RAIL HEIGHT FOR NEW CONSTRUCTION SHALL BE 31" ± 1".

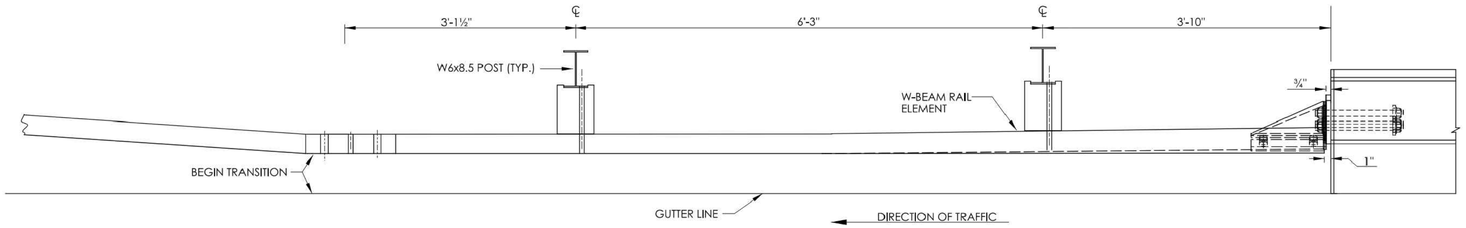

PLAN

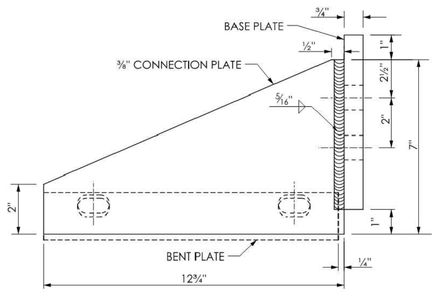

PLAN
CONNECTION PLATE DETAIL
(2 REQUIRED)

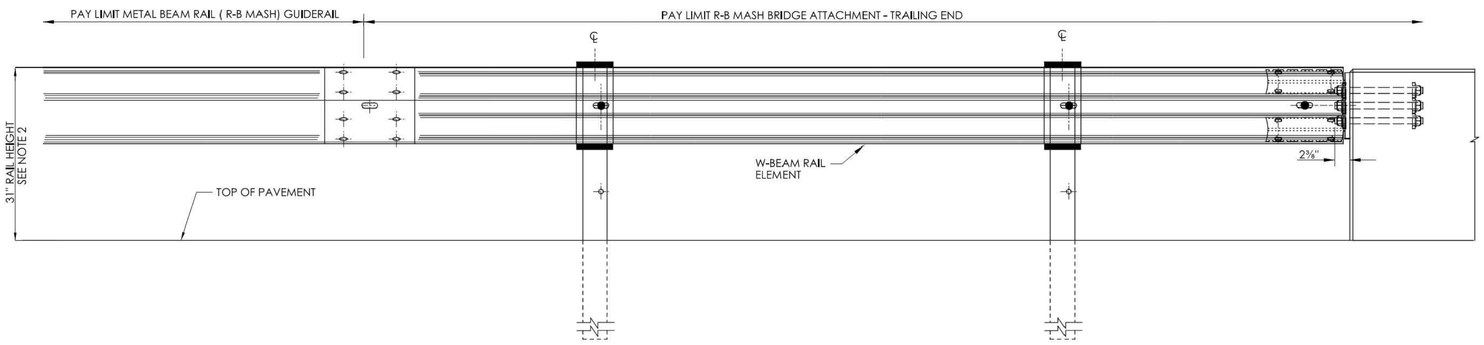

ELEVATION
ATTACHMENT AT TRAILING END OF BRIDGE PARAPET
(ONE-WAY ROADWAY ONLY)

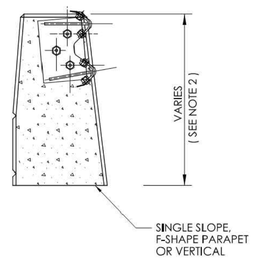

BASE PLATE AND ASSEMBLY ATTACHMENT
TO TRAILING END OF BRIDGE PARAPET
(SEE NOTE 4)

NOT TO SCALE	SIGNATURE BLOCK: OFFICE OF ENGINEERING 2800 BERLIN TURNPIKE NEWINGTON, CT 06111	SUBMITTED BY: Digitally signed by Leo Fontaine, P.E. Date: 2022.09.27 15:10:06-04'00'	APPROVED BY: Digitally signed by Calabrese, Michael Date: 2022.11.08 09:49:29-05'00'	STATE OF CONNECTICUT DEPARTMENT OF TRANSPORTATION

CTDOT STANDARD SHEET

STANDARD SHEET TITLE: **R-B MASH BRIDGE ATTACHMENT TRAILING END**

STANDARD SHEET NO.: **HW-910_28**

PLOTTED DATE: 9/21/2022

No.	DATE	DESCRIPTION	DESIGNER	REVIEWER

STATE OF CONNECTICUT DEAN E. AUGUST No. 17623 LICENSED PROFESSIONAL ENGINEER

SEAL

SCALE: HORZ.: NOT TO SCALE VERT.:
DATUM: HORZ.: VERT.:

FUSS & O'NEILL
146 HARTFORD ROAD
MANCHESTER, CONNECTICUT 06040
860.646.2469
www.fando.com

CITY OF MERIDEN

GENERAL SITE DETAILS

BRIDGE REPLACEMENTS AND UTILITY IMPROVEMENTS
BUTLER STREET AND HANOVER STREET
MERIDEN CONNECTICUT

PROJ. No.: 20170932.C38
DATE: FEBRUARY 27, 2024

CD-125

File Path: J:\DWG\P20170932\C11\Civil\Plan\20170932C11_DET01.dwg, Layout: CD-125 (PHASE 1), Plotted: Tue, Feb 27, 2024 - 4:56 PM User: SHuffman
PC3: AUTOCAD PDF (GENERAL DOCUMENTATION).PC3 STB/CTB: FO.STB
LAYER STATE:
MS VIEW:

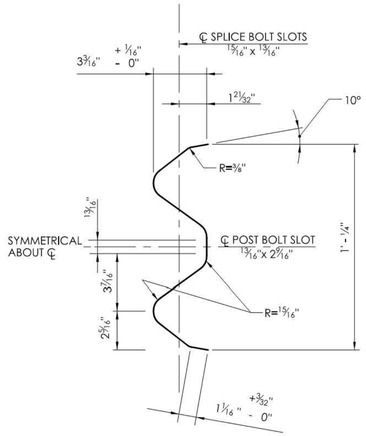

SECTION VIEW

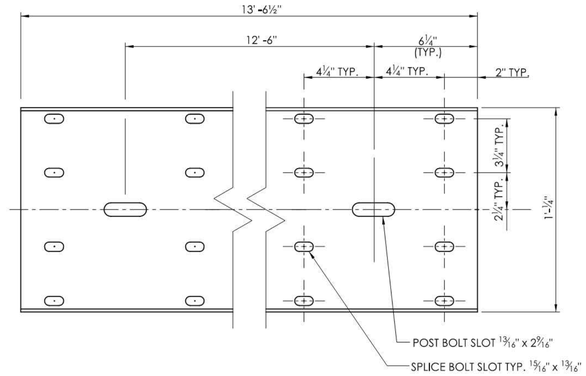

ELEVATION VIEW

TYPICAL W-BEAM RAIL ELEMENT

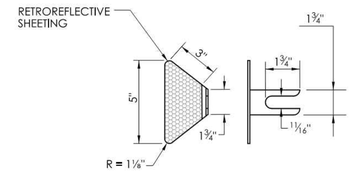

W-BEAM DELINEATOR

GENERAL NOTES:

1. W6 x 9 POSTS MAY BE USED IN PLACE OF W6 x 8.5 POSTS.
2. W-BEAM GUIDERAIL SHALL USE CLASS A (12 GAUGE), TYPE II W-BEAM RAIL ELEMENTS.
3. SEVEN FOOT LONG STEEL POSTS (W6 X 8.5) ARE TO BE INSTALLED WHERE INDICATED ON THE PLANS OR AS DIRECTED BY THE ENGINEER.
4. ALL DIMENSIONS SUBJECT TO MANUFACTURING TOLERANCES

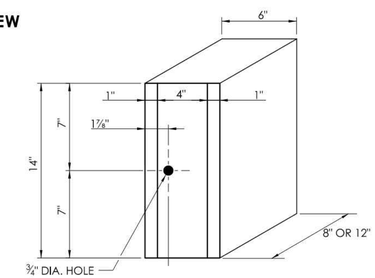

8" or 12" PLASTIC BLOCKOUT
NOMINAL DIMENSIONS

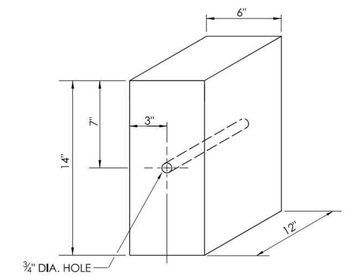

12" WOOD BLOCKOUT

W-BEAM DELINEATOR INSTALLATION NOTES:

1. INSTALL W-BEAM DELINEATORS ON RAIL THAT IS PARALLEL TO AND NOT GREATER THAN 8' FROM THE EDGE OF THE ROADWAY. A MINIMUM OF THREE W-BEAM DELINEATORS SHALL BE INSTALLED ON ANY LENGTH OF GUIDERAIL.
2. THE SPACING OF W-BEAM DELINEATORS IS 50 FEET, INSTALLED AT RAIL SPLICE LOCATIONS. SPACING IS 25 FEET ON RADII LESS THAN 300 FEET.
3. NO W-BEAM DELINEATORS ARE PERMITTED WITHIN 75 FEET OF THE IMPACT HEAD OF ANY TANGENTIAL OR FLARED IMPACT ATTENUATION SYSTEM.
4. RETROREFLECTIVE SHEETING SHALL BE WHITE EXCEPT ON THE LEFT SIDE OF DIVIDED STREETS, HIGHWAYS, RAMPS, AND ONE WAY ROADS IN THE DIRECTION OF TRAVEL WHERE IT SHALL BE YELLOW.

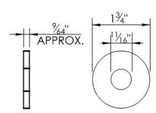

WASHER
[FWC16a]

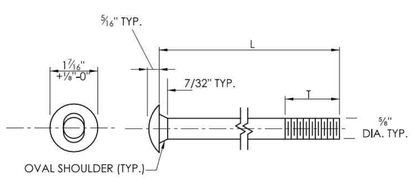

BUTTONHEAD BOLT

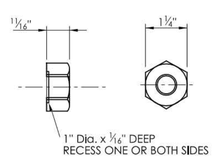

HEX NUT

DESIGNATOR	L	T	INTENDED USE
FBB01	1 1/4"	1 1/8"	RAIL SPLICE BOLTS
FBB02	2"	1 3/4"	RUB RAIL BOLTS
FBB03	10"	4"	POST BOLTS (8" BLOCK OUTS)
	14"	4"	POST BOLTS (12" BLOCK OUTS)
FBB04	18"	4"	POST BOLTS (2-8" BLOCK OUTS)
	22"	4"	POST BOLTS (CRT WOOD POST SYSTEM)

5/8" BUTTON HEAD BOLT(S) AND RECESSED NUT(S)

NOTE: AFTER GALVANIZING, THE NUT SHALL BE FREE RUNNING ON THE BOLT. DIAMETER SHOWN IS TYPICAL FOR ALL GUIDERAIL BOLTS. SEE DETAILS ABOVE FOR SPECIFIC LENGTHS.

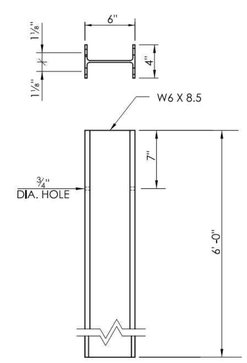

STEEL POST
6' - 0" LONG

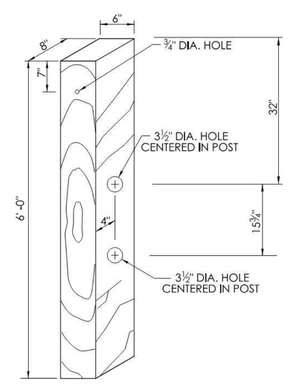

CONTROL RELEASE TIMBER (CRT) POST
6' - 0" LONG

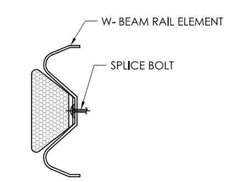

W-BEAM DELINEATOR INSTALLATION

NOT TO SCALE	SIGNATURE BLOCK: OFFICE OF ENGINEERING 2800 BERLIN TURNPIKE NEWINGTON, CT 06111	SUBMITTED BY: Digitally signed by Lino Fontaine, P.E. Date: 2022.09.27 15:10:20-04'00'	APPROVED BY: Digitally signed by Calabrese, Michael Date: 2022.11.08 09:54:27-05'00'	STATE OF CONNECTICUT DEPARTMENT OF TRANSPORTATION
CTDOT STANDARD SHEET	STANDARD SHEET TITLE: MASH W-BEAM HARDWARE	STANDARD SHEET NO.: HW- 910_20		

PLOTTED DATE: 9/21/2022

No.	DATE	DESCRIPTION	DESIGNER	REVIEWER

STATE OF CONNECTICUT DEAN E. AUDET No. 17613 LICENSED PROFESSIONAL ENGINEER

SEAL

SCALE: HORZ.: NOT TO SCALE; VERT.:
DATUM: HORZ.: ; VERT.:

FUSS & O'NEILL
146 HARTFORD ROAD
MANCHESTER, CONNECTICUT 06040
860.646.2469
www.fando.com

CITY OF MERIDEN

GENERAL SITE DETAILS

BRIDGE REPLACEMENTS AND UTILITY IMPROVEMENTS
BUTLER STREET AND HANOVER STREET
MERIDEN CONNECTICUT

PROJ. No.: 20170932.C38
DATE: FEBRUARY 27, 2024

CD-126

File Path: J:\DWG\P\20170932\C11\Civil\Plan\20170932C11_DET01.dwg, Layout: CD-126 (PHASE 1), Plotted: Tue, Feb 27, 2024 - 4:56 PM User: SHuffman
PC3: AUTOCAD PDF (GENERAL DOCUMENTATION).PC3 STB/CTB: FO.STB
LAYER STATE:
MS VIEW:

GENERAL NOTES:

1. SEE SHEET HW-910_20 FOR HARDWARE AND W-BEAM DELINEATOR DETAILS.
2. W-BEAM DELINEATOR MAY BE INSTALLED AT POST BOLT CONNECTION TO MAINTAIN APPROPRIATE DELINEATOR SPACING.

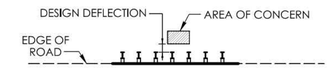

POST SPACING		DESIGN DEFLECTION
STANDARD	(6' - 3")	4' - 3"
HALF POST	(3' - 1½")	2' - 8"
QUARTER POST	(1' - 6¾")	1' - 10"

TABLE 1

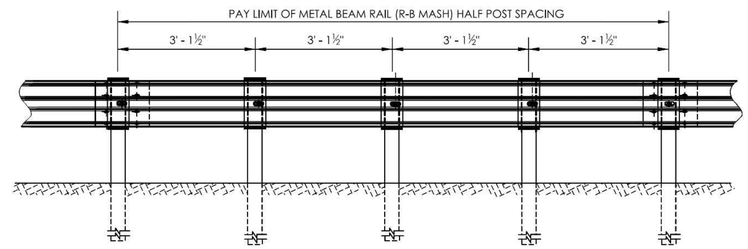

METAL BEAM RAIL (R-B MASH) HALF POST SPACING

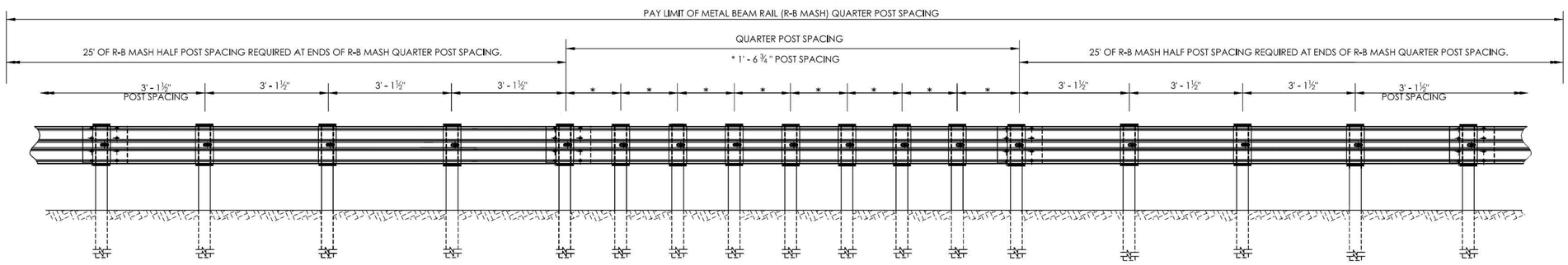

METAL BEAM RAIL (R-B MASH) QUARTER POST SPACING

NOT TO SCALE	SIGNATURE BLOCK: OFFICE OF ENGINEERING 2800 BERLIN TURNPIKE NEWINGTON, CT 06111	SUBMITTED BY: Digitally signed by Leo Fontaine, P.E. Date: 2022.09.27 15:10:48-04'00'	APPROVED BY: Digitally signed by Calabrese, Michael Date: 2022.11.08 09:52:25-05'00'	STATE OF CONNECTICUT DEPARTMENT OF TRANSPORTATION	CTDOT STANDARD SHEET	STANDARD SHEET TITLE: METAL BEAM RAIL (R-B MASH) HALF AND QUARTER POST SPACING GUIDERAIL	STANDARD SHEET NO.: HW- 910_23

PLOTTED DATE: 9/21/2022

File Path: J:\DWG\P20170932\C11\Civil\Plan\20170932C11_DET01.dwg, Layout: CD-127 (PHASE 1), Plotted: Tue, Feb 27, 2024 - 4:56 PM User: SHuffman
PC3: AUTOCAD PDF (GENERAL DOCUMENTATION).PC3 STB/CTB: FO.STB
LAYER STATE:
MS VIEW:

No.	DATE	DESCRIPTION	DESIGNER	REVIEWER

STATE OF CONNECTICUT DEAN E. AUDET No. 17623 LICENSED PROFESSIONAL ENGINEER

SEAL

SCALE:
HORZ.: NOT TO SCALE
VERT.:
DATUM:
HORZ.:
VERT.:

FUSS & O'NEILL
146 HARTFORD ROAD
MANCHESTER, CONNECTICUT 06040
860.646.2469
www.fando.com

CITY OF MERIDEN

GENERAL SITE DETAILS

BRIDGE REPLACEMENTS AND UTILITY IMPROVEMENTS
BUTLER STREET AND HANOVER STREET

MERIDEN CONNECTICUT

PROJ. No.: 20170932.C38
DATE: FEBRUARY 27, 2024

CD-127

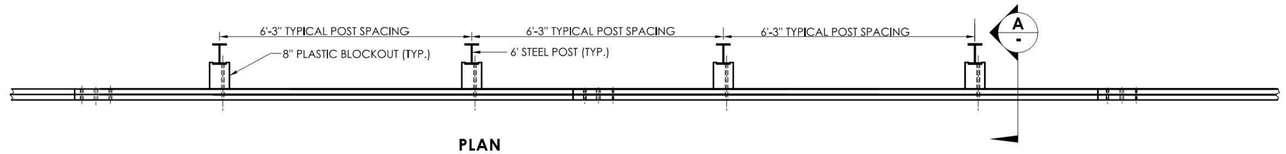

PLAN

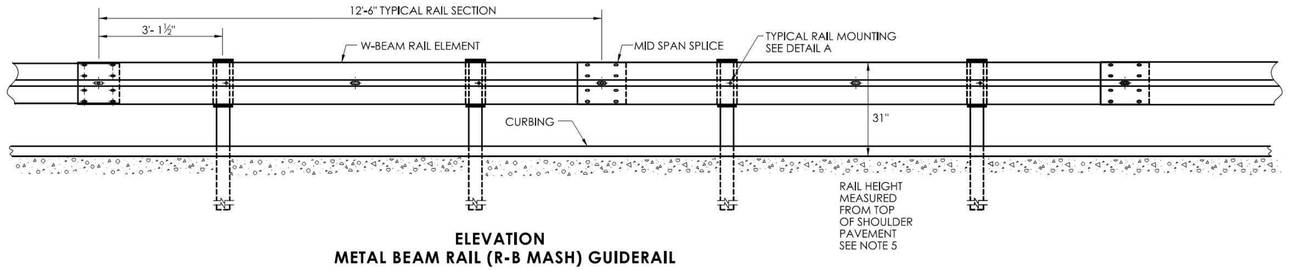

ELEVATION
METAL BEAM RAIL (R-B MASH) GUIDERAIL

GENERAL NOTES:

1. SEE SHEET HW-910_20 FOR MASH W-BEAM HARDWARE AND W-BEAM DELINEATOR DETAILS.
2. THREE BLOCKOUTS MAY BE USED FOR ONE POST ONLY. TWO BLOCKOUTS MAY BE USED FOR A SERIES OF POSTS. THE COST OF ADDITIONAL BLOCKOUTS AND LONGER BOLTS SHALL BE INCLUDED IN THE PRICE PER FOOT OF GUIDERAIL. EXTRA BLOCKOUTS AT TRANSITIONS TO BRIDGE PARAPETS SHOULD BE AVOIDED. DO NOT USE ADDITIONAL BLOCKS IF IT CAUSES THE POST TO BE DRIVEN BEYOND AN EMBANKMENT HINGE POINT OR CAUSES A FIXED OBJECT TO BE WITHIN THE DEFLECTION DISTANCE OF THE BARRIER.
3. IF BLOCKOUTS DO NOT AVOID POST FROM OBSTRUCTION, ONE POST MAY BE OMITTED IF 50 FEET OF GUIDERAIL EXISTS ON BOTH SIDES OF LOCATION. USE METAL BEAM RAIL SPAN SECTION TYPE II OR III FOR MORE THAN ONE CONSECUTIVE OMITTED POST, SEE SHEET HW-910_24.
4. W-BEAM GUIDERAIL MAY BE PLACED 1' OR MORE FROM THE EDGE OF PAVEMENT ONLY ON SLOPES 10:1 OR FLATTER AND WITHOUT CURBING.
5. IF THE RAIL IS INSTALLED WITHIN 2' OF THE EDGE OF PAVEMENT, THE RAIL HEIGHT IS MEASURED FROM THE SHOULDER SLOPE EXTENDED TO THE RAIL. IF THE RAIL IS INSTALLED BEYOND 2' FROM THE EDGE OF PAVEMENT, THE RAIL HEIGHT IS MEASURED FROM THE GROUND DIRECTLY BELOW THE RAIL.
6. RAIL HEIGHT CONSTRUCTION TOLERANCE IS +/- 1 INCH.
7. FOR NEW CONSTRUCTION, PLACE 6 INCH LAYER OF PROCESS AGGREGATE. FOR CONSTRUCTION PROJECTS WITH GUIDERAIL UPGRADE, THE CONTRACT PLANS MAY CALL OUT PROCESS AGGREGATE ONLY TO BE PLACE IN LOCATION(S) OF EXISTING VERTICAL PAVEMENT EDGE DROP OFF AS A LEVELING MATERIAL, FILLING IN DEPRESSED AREAS.

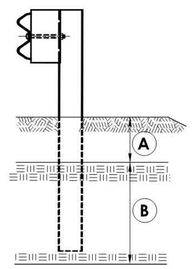

CONDITION 1 :
IF SOIL DEPTH IS ≤ 18" DEEP (A) DRILL 20" DIA. HOLE 24" INTO LEDGE. (B)

CONDITION 2 :
IF SOIL DEPTH IS > 18" DEEP (A) DRILL 8" DIA. HOLE 12" INTO LEDGE (B) OR TO THE DEPTH OF FULL EMBEDMENT WHICHEVER IS LESS.

ELEVATION

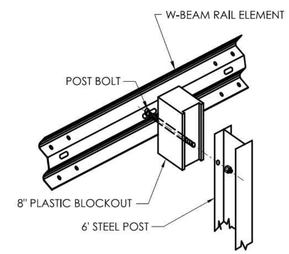

DETAIL A
RAIL MOUNTING

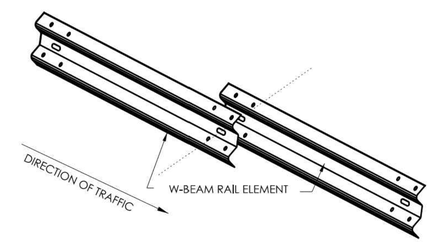

LAP W-BEAM RAIL SECTIONS
NOTE: EIGHT (8) SPLICE BOLTS PER JOINT

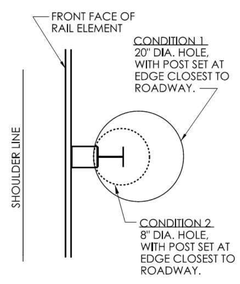

PLAN

GUIDERAIL POSTS IN ROCK

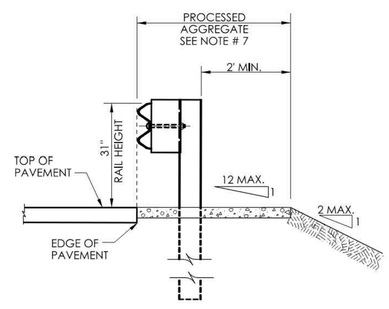

SECTION A -

NO CURB APPLICATION

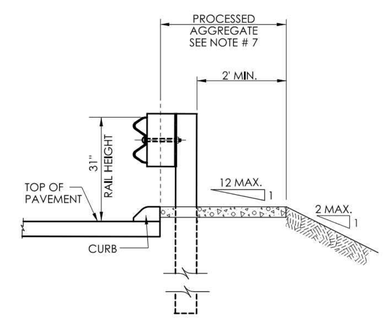

SECTION A -

CURB APPLICATION

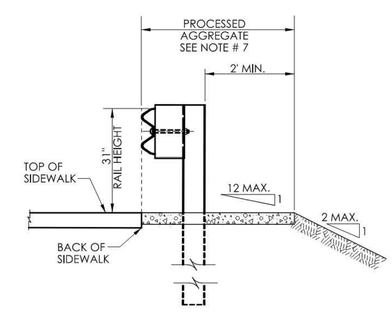

SECTION A -

SIDEWALK APPLICATION

	NOT TO SCALE	SIGNATURE BLOCK: OFFICE OF ENGINEERING 2800 BERLIN TURNPIKE NEWINGTON, CT 06111	SUBMITTED BY: Digitally signed by Leo Fontaine, P.E. Date: 2022.09.27 15:11:06-04'00'	APPROVED BY: Digitally signed by Calabrese, Michael Date: 2022.11.08 09:53:37-05'00'	STATE OF CONNECTICUT DEPARTMENT OF TRANSPORTATION	CTDOT STANDARD SHEET	STANDARD SHEET TITLE: METAL BEAM RAIL (R-B MASH) GUIDERAIL	STANDARD SHEET NO.: HW- 910_21

PLOTTED DATE: 9/21/2022

No.	DATE	DESCRIPTION	DESIGNER	REVIEWER

STATE OF CONNECTICUT — SEAN E. AUDETTE — No. 17623 — LICENSED PROFESSIONAL ENGINEER

SEAL

SCALE:
HORZ.: NOT TO SCALE
VERT.:
DATUM:
HORZ.:
VERT.:

FUSS & O'NEILL
146 HARTFORD ROAD
MANCHESTER, CONNECTICUT 06040
860.646.2469
www.fando.com

CITY OF MERIDEN

GENERAL SITE DETAILS

BRIDGE REPLACEMENTS AND UTILITY IMPROVEMENTS
BUTLER STREET AND HANOVER STREET
MERIDEN CONNECTICUT

PROJ. No.: 20170932.C38
DATE: FEBRUARY 27, 2024

CD-128

File Path: J:\DWG\P2017\0932\C11\Civil\Plan\20170932C11_DET01.dwg, Layout: CD-128 (PHASE 1), Plotted: Tue, Feb 27, 2024 - 4:56 PM User: SHuffman
PC3: AUTOCAD PDF (GENERAL DOCUMENTATION).PC3 STB/CTB: FO.STB
LAYER STATE:
MS VIEW: